NOTICE -- WHEN GOVERNMENT DRAWINGS, SPECIFICATIONS, OR OTHER DATA ARE USED FOR ANY PURPOSE OTHER THAN IN CONNECTION WITH A DEFINITELY RELATED GOVERNMENT PROCUREMENT OPERATION, THE UNITED STATES GOVERNMENT THEREBY INCURS NO RESPONSIBILITY NOR ANY OBLIGATION WHATSOEVER; AND THE FACT THAT THE GOVERNMENT MAY HAVE FORMULATED, FURNISHED, OR IN ANY WAY SUPPLIED THE SAID DRAWINGS, SPECIFICATIONS OR ANY OTHER DATA IS NOT TO BE REGARDED BY IMPLICATION OR OTHERWISE IN ANY MANNER LICENSING THE HOLDER OR ANY OTHER PERSONS OR CORPORATION, OR CONVEYING ANY RIGHTS OR PERMISSION TO MANUFACTURE, USE, OR SELL ANY PATENTED INVENTION THAT IN ANY WAY BE RELATED THERETO.

REVISIONS

SYM	DESCRIPTION	DATE	APPROVAL
E	REVISED & REDRAWN SHEET 1. ADDED SHEETS 2,3 & 4. COMBINED 79K80269, 79K90269, 79K80268 & 79K90268. 1. UPDATED VENDOR ADDRESS. 2. MOVED VACUUM VALVE ASSY. TO SHEET 3. 3. MOVED THERMOCOUPLE ASSY. AND ELECTRICAL SCHEM TO SHEET 4. 4. WAS SHEET 1 OF 1.	2002/09/09	E. THOMPSON T. ADAMS
F	REVISED SHEET 1.3 & 4 ADDED SHEETS 1A & 5. 1. MOVED NOTES 13 THRU 21 TO SHEET 1A. 2. WAS SHEET 1 OF 4	2006/02/23	H. HANNAH T. ADAMS

REQUIREMENTS FOR VACUUM VALVE

1. SERVICE: VACUUM JACKETS FOR LOX, LH2, LHe, AND LN2
2. OPERATING PRESSURE: 0 PSIA (VACUUM) TO 65 PSIG
3. CRACKING PRESSURE: 16 TO 24 PSIG.
   TEST WHILE INCREASING PRESSURE WITH VALVE IN VERTICAL UPRIGHT POSITION WITHOUT CAP.
4. RESET PRESSURE: RELIEF VALVE SHALL RESEAT AT 10 PSIG (MIN) WHILE DECREASING PRESSURE AND THE VALVE IS IN THE UPRIGHT POSITION
5. TEST PRESSURE: 1½ x MAX OPERATING PRESSURE
6. BURST PRESSURE: 4 x INLET PRESSURE
7. OPERATION: INSTALLED SEAL OFF VALVE IS SPRING LOADED TO SEAL OFF & MAINTAIN VACUUM IN VACUUM INSULATED COMPONENTS AFTER EVACUATION. VALVE SHALL HAVE A PORT CONNECTION FOR VACUUM PUMPING AND A INTEGRAL RELIEF CAPABILITY TO RELIEVE POSITIVE PRESSURE IF IT OCCURS IN THE ANNULAR SPACE. THE VALVE SHALL ALSO HAVE A VACUUM ISOLATION VALVE WHICH WILL BE WELDED TO THE SEAL OFF VALVE. THE ISOLATION VALVE SHALL HAVE A ⅛" FNPT PORT FOR INSTALLATION OF A PRESSURE SENSING ELEMENT. THE ISOLATION VALVE SHALL HAVE THE ABILITY TO ISOLATE THE PRESSURE SENSING DEVICE FROM THE VACUUM ANNULUS.
8. CONNECTION: NOMINAL 1" WELD
9. LEAKAGE: BUBBLE TIGHT INTERNALLY FOR INTERNAL VACUUM OF 10-7 TORR & EXTERNAL PRESSURE OF 15 PSIG HELIUM FOR ONE MINUTE.
10. OPERATING TEMPERATURE: -65°F TO 200°F.
11. CLEANING: CLEAN, PROTECT & INSPECT PER KSC-C-123 VC PRIOR TO INSTALLATION
12. LUBRICATION: USE KRYTOX 240 AC, OR USA DESIGN ENGINEERING APPROVED EQUAL, SPARINGLY ON O-RINGS AND ALL THREADED SURFACES, EXCEPT THERMOCOUPLE THREADS.

NOTE: THIS DRAWING COMBINES 79K80268, 79K90268, 79K80269 & 79K09269. DO NOT USE LISTED DRAWINGS FOR NEW PROCUREMENT. USE EXISTING COMPONETS UNTIL DEPLETED

THIS COMPUTER DRAWING WAS CREATED IN MICROSTATION AND FILED UNDER THE DRAWING NUMBER

NEXT ASSY	USED ON
SEE ENGINEERING RECORDS	
	KSC GSE

APPLICATION

UNLESS OTHERWISE SPECIFIED
DIMENSIONS ARE IN INCHES
TOLERANCES ON
FRACTIONS — DECIMALS 0.010 ANGLES —
MATERIAL
HEAT TREATMENT
FINAL PROTECTIVE FINISH

ORIGINAL DATE OF DRAWING 4-26-78
DRAFTER CHECKER
CHECKER STRESS
ENGINEER ENGINEER
SUBMITTED A. RODRIQUES 6/23/78 R. L. FISHER 6/21/78
APPROVED I. MOORE 6/27/78

VACUUM VALVE ASSEMBLY

WEIGHT CHECKER DATE CODE 22264
SCALE NONE UNIT WEIGHT

JOHN F. KENNEDY SPACE CENTER, NASA
KENNEDY SPACE CENTER FLORIDA

DWG SIZE B 79K14672
SHEET 1 OF 5

KSC FORM 21-4 (REV. 2/91) (C/G 3/93)

CAD CLOCKED

REVISIONS			
SYM	DESCRIPTION	DATE	APPROVAL
F	THIS SHEET ADDED 1.NOTES 13 THRU 21 MOVED FROM SH 1.	2006/02/23	H. HANNAH T. ADAMS

13. OXYGEN COMPATIBILITY OF SOFT GOODS: NOT APPLICABLE
14. AGE CONTROL: NOT APPLICABLE
15. IDENTIFICATION: ALL ASSEMBLIES SHALL BE IDENTIFIED BY MEANS OF A FIRMLY ATTACHED WEATHERPROOF TAG WHICH IS STAMPED, ENGRAVED OR ETCHED WITH THIS DWG NO. & REVISION LETTER
16. TORQUE VALUES: CAP (ITEM 9) HAND TIGHT
    CAP (ITEM 21) HAND TIGHT
17. VENDOR: CPC/CRYOLAB
    12501 TELECOM DR.
    TAMPA FL. 33637
18. USE EPOXY (VAC SEAL) 2886000 ON THREADS WHEN ASSEMBLING THERMOCOUPLE TO VACUUM ISOLATION VALVE AS SUPPLIED BY PHYSICAL ELECTRONICS, 6509 FLYING CLOUD DR EDEN PRAIRIE, MN. 55344 OR USA DESIGN ENG APPROVED EQUAL
19. THIS ITEM IS A PART OF VENDOR SOFT GOODS KIT PART NUMBER 7152/7153
20. ITEMS 7 THRU 16 MAKE UP CAP ASSEMBLY WITH CHAIN. VENDOR PART NUMBER SV3-088-KSCCAP
21. ITEMS 7 THRU 13 MAKE UP CAP ASSEMBLY WITH OUT CHAIN. VENDOR PART NUMBER SV3-88-KSCCAPNC

THIS COMPUTER DRAWING WAS CREATED IN MICROSTATION AND FILED UNDER THE DRAWING NUMBER

CODE IDENT NO.	DWG SIZE	79K14672
22264	B	SHEET 1A OF

CAD LOCKED

REVISIONS			
SYM	DESCRIPTION	DATE	APPROVAL
E	THIS SHEET ADDED	2002/09/09	E. THOMPSON T. ADAMS

REQUIREMENTS FOR PRESSURE SENSING THERMOCOUPLE

1. SERVICE: VACUUM JACKETS FOR LOX, LH2, LHe, AND LN2
2. DESIGN PRESSURE: 0 PSIA (VACUUM) TO 65 PSIG
3. TEST PRESSURE: 1½ X MAX POSITIVE PRESSURE
4. OPERATION: THE PRESSURE SENSING ELEMENT SHALL CONSIST OF A THERMOCOPLE WELDED TO A HEATER FILIMENT. VARYING PRESSURE AROUND THE HEATER FILAMENT SHALL CAUSE A VARIATION IN FILAMENT TEMPERATURE & A RESULTING CHANGE IN VOLTAGE OUTPUT BY THE THERMOCOUPLE. ELECTRICAL INPUT TO THE FILAMENT & THERMOCOUPLE OUTPUT INDICATION SHALL BE PROVIDED BY EXTERNAL EQUIPMENT
5. PRESSURE SENSING SENSITIVITY: 12 MILLIVOLTS AT 0.01 MICRONS AND 95 MILLIAMPS OF HEATER CURRENT WITH AN ACCURACY OF ± 1 MICRON AT 10 MICRONS, ± 3 MICRONS AT 80 MICRONS AND +100/-50 MICRONS AT 375 MICRONS. CALIBRATION MEDIUM SHALL BE DRY AIR.
6. PRESSURE SENSING TEMPERATURE COMPENSATION: 39° TO 150°F
7. HEATER POWER REQUIREMENTS: 100 MA (NOMINAL MAX VALUE)
8. CONNECTIONS: MECHANICAL-1/8" NPT
   ELECTRICAL-TO MATE WITH PC-06A-8-4S(SR) (BENDIX CO)
9. LEAKAGE: LEAK RATE NOT TO EXCEED 2x10-9 SCC/SEC OF GHe
10. CLEANLINESS: KSC-C-123, LEVEL VC
11. VOLTAGE OUTPUT: FULL VOLTAGE OUTPUT SHALL BE 12MV ± 0.1 MV AT 1 MICRON. TEST WITH 10K OHMS (MIN) LOAD
12. OUTPUT IMPEDANCE: NOT APPLICABLE (NON-INDUCTIVE CIRCUIT)
13. ACCURACY: TOLERANCE SHALL BE ± 1 MICRON AT 1 THRU 10 MICRONS PRESSURE; ± 5 MICRONS AT 100 MICRONS; +100 ,-50 MICRONS AT 400 THRU 500 MICRONS. TOLERANCE TO INCLUDE ERROR IN METER (FREDRICKS/TELEVAC B2A-1-BAT OR EQUAL)
14. ZERO BALANCE: NOT APPLICABLE (SINGLE ENDED CIRCUIT)
15. REPEATRIBILITY: WITHIN ACCURACY ABOVE
16. RESOLUTION: RESOLUTION OF THE OUTPUT VOLTAGE SHALL BE INFINITE
17. CURRENT DRAIN: 100 MA (MAX)
18. OUTPUT NOISE: NOT APPLICABLE
19. INSULATION RESISTANCE: GREATER THAN 1000 MEGOHMS, MEASURED WITH 50 V DC BETWEEN ALL TERMINALS CONNECTED IN PARALLEL & THERMOCOUPLE BASE
20. COMPONENT MARKING: VENDOR'S PART NO. SHALL APPEAR PERMANENTLY & LEGIBLY UPON THE ASSEMBLY.
21. MOUNTING ATTITUDE: ANY POSITION
22. TESTING: THE MANUFACTURER SHALL PROVIDE WRITTEN CERTIFICATION THAT EACH ASSEMBLY HAS BEEN DIMENSIONALLY, FUNCTIONALLY, PROOF, & LEAK TESTED PER ITEMS 5,6,7,8,& 9
23. PACKAGING: PER MANUFACTURER'S STANDARD PRACTICE PROVIDED THAT PACKAGING IS SUFFICIENT TO PROTECT COMPONENT AGAINST DAMAGE DURING SHIPMENT. EXTERIOR SHIPPING CONTAINER SHALL CONFORM TO FREIGHT CLASSIFICATION RULES & APPLICABLE CONTAINER SPECIFICATIONS
24. AGE CONTROL: NOT APPLICABLE
25. MANUFACTURER: FREDRICKS CO., TELEVAC DIVISION
    2400 PHILMONT AVENUE
    HUNTINGTON VALLEY, PA 19006
26. APPROVAL: ANY CHANGE TO THE COMPONENTS DESCRIBED BY THIS DWG REQUIRES PRIOR USA DESIGN ENGINEERING APPROVAL
27. HEATER AND THERMOCOUPLE RESISTANCE: AS SHOWN ON SH 4. IF EITHER RESISTANCE VALUE IS OUTSIDE THE SPECIFIED LIMITS, THE THERMOCOUPLE ASSY SHALL BE TESTED AT 5 TO 15 MICRONS VACUUM WITH 100 MILLIAMPS HEATER CURRENT. OUTPUT SHALL BE 12 MILLIVOLTS, OPEN CIRCUIT ± 10 %

THIS COMPUTER DRAWING WAS CREATED IN MICROSTATION AND FILED UNDER THE DRAWING NUMBER

CODE IDENT NO	DWG SIZE	79K14672
22264	B	SHEET 2 OF

NOTICE -- WHEN GOVERNMENT DRAWINGS, SPECIFICATIONS, OR OTHER DATA ARE USED FOR ANY PURPOSE OTHER THAN IN CONNECTION WITH A DEFINITELY RELATED GOVERNMENT PROCUREMENT OPERATION, THE UNITED STATES GOVERNMENT THEREBY INCURS NO RESPONSIBILITY NOR ANY OBLIGATION WHATSOEVER; AND THE FACT THAT THE GOVERNMENT MAY HAVE FORMULATED, FURNISHED, OR IN ANY WAY SUPPLIED THE SAID DRAWINGS, SPECIFICATIONS OR ANY OTHER DATA IS NOT TO BE REGARDED BY IMPLICATION OR OTHERWISE IN ANY MANNER LICENSING THE HOLDER OR ANY OTHER PERSONS OR CORPORATION, OR CONVEYING ANY RIGHTS OR PERMISSION TO MANUFACTURE, USE, OR SELL ANY PATENTED INVENTION THAT IN ANY WAY BE RELATED THERETO.

VALVE ASSY. PART NO.	CONFIGURATION
79K14672-1	NOT FOR NEW PROCUREMENT OR INSTALLATION. USE 79K14672-4
79K14672-2	NOT FOR NEW PROCUREMENT OR INSTALLATION. USE 79K14672-3
79K14672-3	WITH CHAIN, 24 PSIG RELIEF PRESSURE (VENDOR P/N SV8247-9)
79K14672-4	WITHOUT CHAIN, 24 PSIG RELIEF PRESSURE (VENDOR P/N SV8247-10)

REVISIONS

SYM	DESCRIPTION	DATE	APPROVAL
E	THIS SHEET ADDED. 1. VACUUM VALVE ASSY WAS ON SHEET 1. 2. DELETED 5 & 15 PSIG RELIEF PRESSURE. 3. INC. DATA FROM 79K80269, 79K90269, 79K80268 & 79K90268. 4. ADDED 79K14672-4.	2002/09/09	E. THOMPSON T. ADAMS
F	1. ADDED ITEM 25	2006/02/23	H. HANNAH T. ADAMS

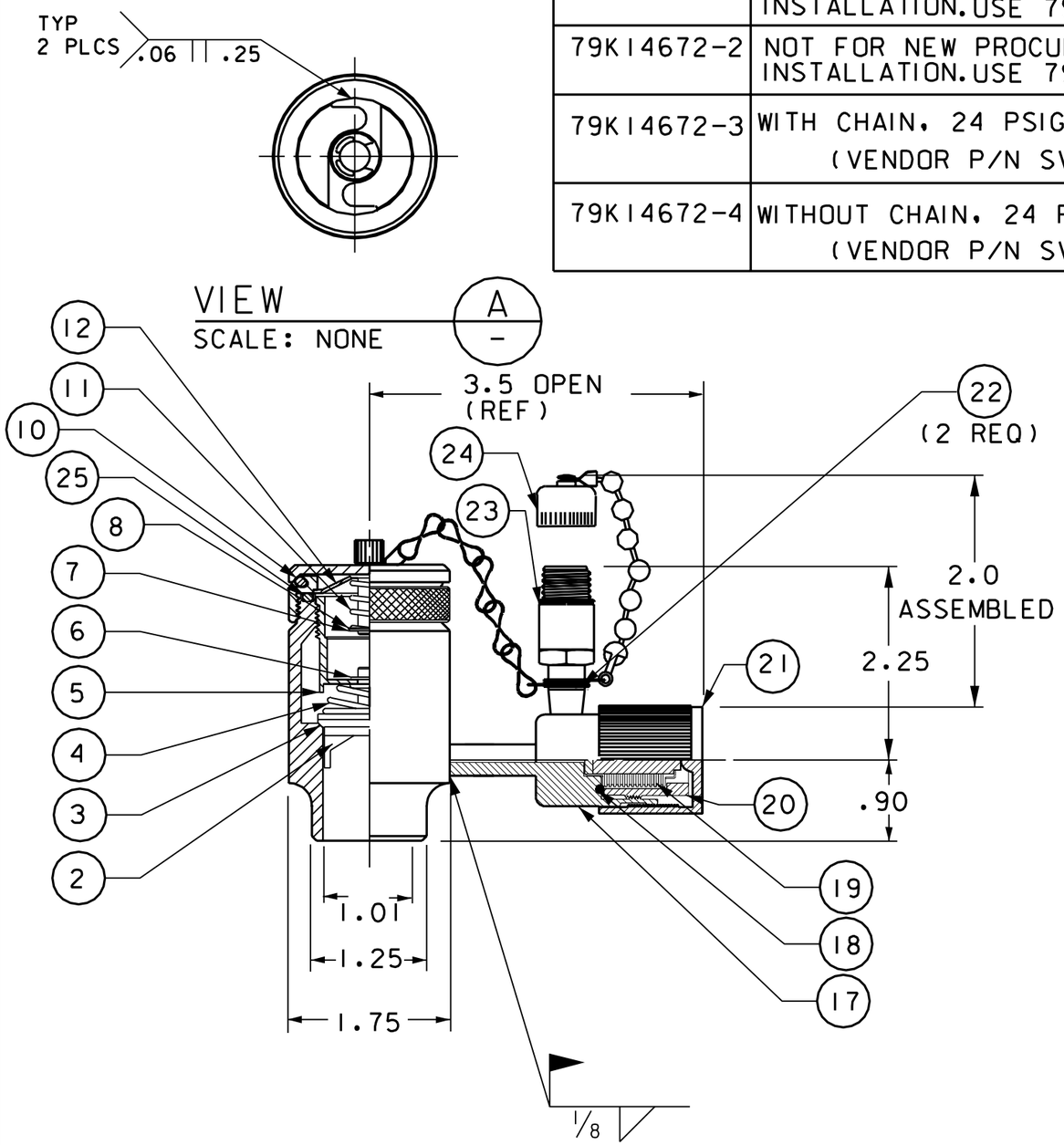

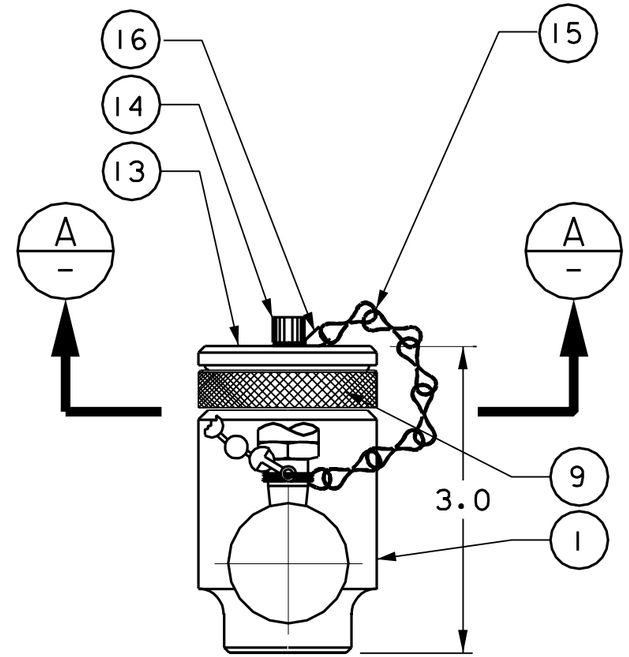

VACUUM VALVE ASSY

SCALE: NONE -1, -2, -3, -4

THIS COMPUTER DRAWING WAS CREATED IN MICROSTATION AND FILED UNDER THE DRAWING NUMBER

CODE IDENT NO.	DWG SIZE	79K14672
22264	B	SHEET 3 OF

CAD LOCKED

REVISIONS			
SYM	DESCRIPTION	DATE	APPROVAL
E	THIS SHEET ADDED	2002/09/09	E. THOMPSON T. ADAMS
F	PARTS LIST MOVED TO SHEET 5 I. WAS SH 4 OF 4.	2006/02/23	H. HANNAH T. ADAMS

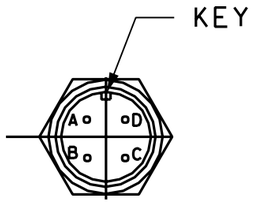

PIN LAYOUT
VACUUM GAUGE
CONNECTION

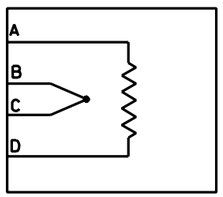

A-D HEATER -3.6 +/- .5 OHMS
B-C THERMOCOUPLE
-2.6 +/- .5 OHMS
B (TC+) C (TC-)

ELECTRICAL SCHEMATIC

SCALE: NONE

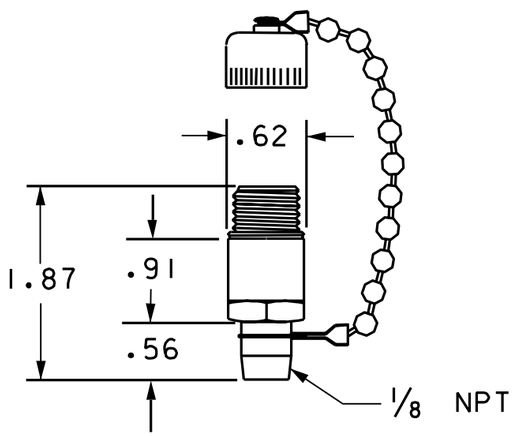

THERMOCOUPLE ASSY

SCALE: NONE

USE THE B2A-1-BAT ANALOG INSTRUMENT (AS SUPPLIED BY FREDERICKS/TELEVAC P/N 2-3001-101 OR EQUAL) TO READ VACUUM LEVELS WITH THIS THERMOCOUPLE.

THIS COMPUTER DRAWING WAS CREATED IN MICROSTATION AND FILED UNDER THE DRAWING NUMBER

CODE IDENT NO.	DWG SIZE	79K14672
22264	B	SHEET 4 OF

CAD CLE LOCKED

ITEM NO.	VENDOR PART NO.	NOMENCLATURE	MATERIAL	REMARKS	
1	38966	VALVE BODY	304L CRES		
2	38969	DISC	316L CRES		
3	-4118-32	O-RING (SIZE AS568-118)	DUPONT VITON A	PARKER V1164-75	19
4	38981	RELIEF SPRING	302 CRES		
5	38967	PLUG	316L CRES		
6	23040163	RETAINING RING	CRES		
7	WS2-055P	WASHER	304 CRES		
8	6335	RETAINING RING	15-7 MoCRES		
9	23072	BODY WELDMENT			
10	-4125-32	O-RING (SIZE: AS568-125)	DUPONT VITON A	PARKER V1164-75	19
11	X3Z8V3-088 -5N4	SPRING	302 CRES	PASSIVATE	
12	38971	Z-BAR	304 CRES		
13	8247-1-01	POPPET	304 CRES		
14	-23010322T	SCREW-SOCKET HEAD CAP	300 SERIES CRES	10-32x1/2"	
15	67624P0A9	JACK CHAIN	304 CRES		
16	F-15609	RETAINING RING	CRES		
17	F-16617	BODY	304L CRES		
18	-4015-32	O-RING (SIZE: AS568-015)	DUPONT VITON A	PARKER V1164-75	19
19	-7804	BELLOWS ASSY	COPPER/KEL-F		
20	-7803	RETAINING NUT	BRASS		
21	-38973	CAP	BRASS		
22	-6362	RETAINING RING	302 CRES		
23	2-2100-31	THERMOCOUPLE	CRES		
24	10-101951-85	CAP ASSY			
25	-4124-32	O-RING (SIZE: AS568-124)	DUPONT VITON-A	PARKER V1164-75	19

REVISIONS

SYM	DESCRIPTION	DATE	APPROVAL
F	THIS SHEET ADDED 1. MOVED PARTS LIST FROM SH4. 2. REVISED PN FOR ITEM 3, 10, 11, 14, AND 17. 3. DELETED NAS 1593 FROM O-RINGS. SUBSTITUTED PARKER COUMPOUND. 4. CORRECTED ITEM 3 & 10 PART NUMBER.	2006/02/23	H. HANNAH T. ADAMS

THIS COMPUTER DRAWING WAS CREATED IN MICROSTATION AND FILED UNDER THE DRAWING NUMBER

CODE IDENT NO.	DWG SIZE	
22264	B	79K14672
		SHEET 5 OF 5

CAD LOCKED