COMMERCIAL PARTS LIST

BALLOON NO	DESCRIPTION	QTY/ ASSY
1	HEX HEAD SOCKET CAP SCREW .375–24UNF–2A X 2.25 LONG MATERIAL: 18–8 STAINLESS STEEL McMASTER–CARR, PART No 92196A366	24
2	FLAT WASHER, FOR 3/8 SCREW .438 I.D. X 1.00 O.D. X .084 NOM. THICK MATERIAL: 18–8 STAINLESS STEEL, HARDENED Rc B70 McMASTER–CARR, PART No 98019A500	24
3	PIN, DOWEL .250 NOM. O.D. X 1.00 LONG MATERIAL: 316 STAINLESS STEEL McMASTER–CARR, PART No 97395A491	2
4	ANTI–SEIZE COMPOUND (4) McMASTER–CARR, PART No 1288K13	1

INCH FASTENERS TORQUE VALUES (IN–LBS)	
NO	EFFECTIVE TORQUE
1	198

CONTOUR COORDINATES (5)	(6)
X	Y_R
0.00000	13.16920
0.11259	13.15710
0.22318	13.14031
0.36500	13.11592
0.52120	13.08297
0.67750	13.04934
0.79698	13.02684
0.90881	13.00784
1.02583	12.98954
1.13665	12.97361
1.24501	12.95928
1.35463	12.94598
1.46422	12.93389
1.57732	12.92266
1.69013	12.91318
1.80227	12.90576
1.91403	12.90252
1.98694	12.90273
2.07902	12.90568
2.14363	12.90960
2.26037	12.92068
2.41700	12.94291
2.57788	12.97439
2.73767	13.01465
2.84545	13.04731
2.95932	13.08703
3.07060	13.13140
3.18190	13.18116
3.29000	13.23450
3.39074	13.28769
3.49762	13.34574
3.60618	13.40307
3.71479	13.45510
3.81850	13.49718
3.92544	13.53140
4.04103	13.55761
4.15630	13.57323
4.27300	13.57956
4.38937	13.57784
4.50481	13.56974
4.61744	13.55713
4.73018	13.54110
4.84251	13.52287
4.95475	13.50342
5.06729	13.48361
5.18024	13.46433
5.29358	13.44644
5.40610	13.43081
5.51714	13.41800
5.62950	13.40810
6.10210	13.40810
6.57470	13.40810
7.43370	13.40810
8.24960	13.40810
9.27380	13.40810
9.40680	13.40810
9.41390	13.40810

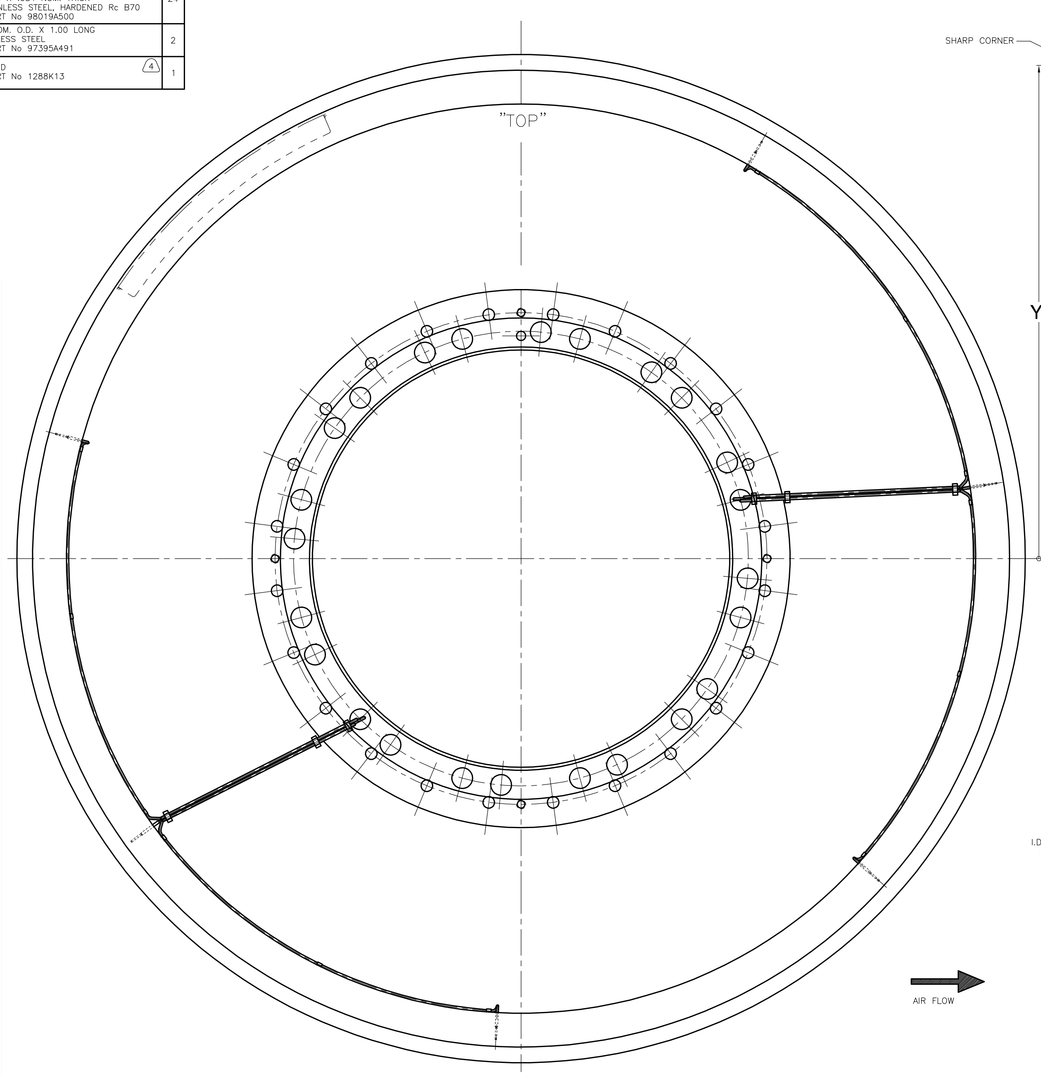

VIEW – FORWARD LOOKING AFT

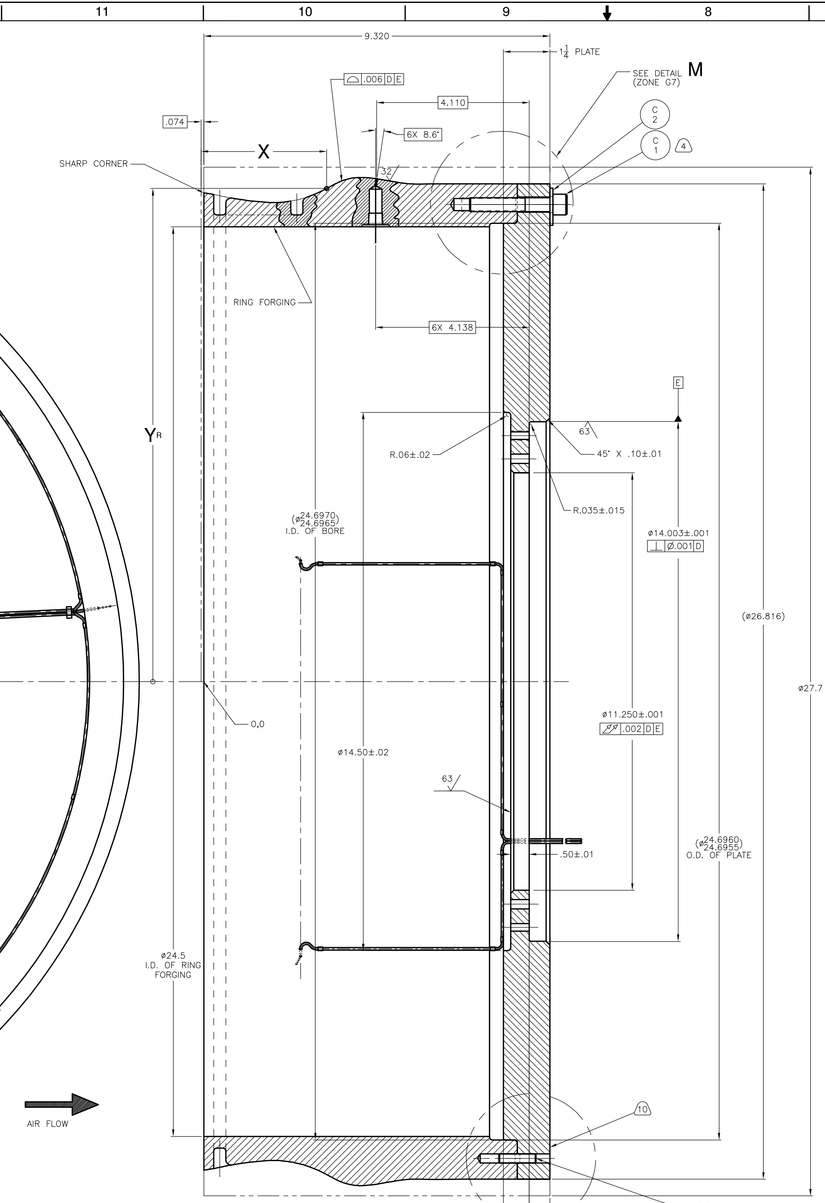

SECTION K-K (ZONE H5)
OPTIONAL CONSTRUCTION USING RING FORGING AND PLATE
SCALE: 1/1

SIZE	BLDG/SYM	PROJECT #	DSCP	TYP SEQ
CR	0023 -	00173391	- M-	501

DETAIL M (ZONE H8)
C1 (CAP SCREW) AND C2 (WASHER) NOT SHOWN FOR CLARITY
SCALE: 2/1

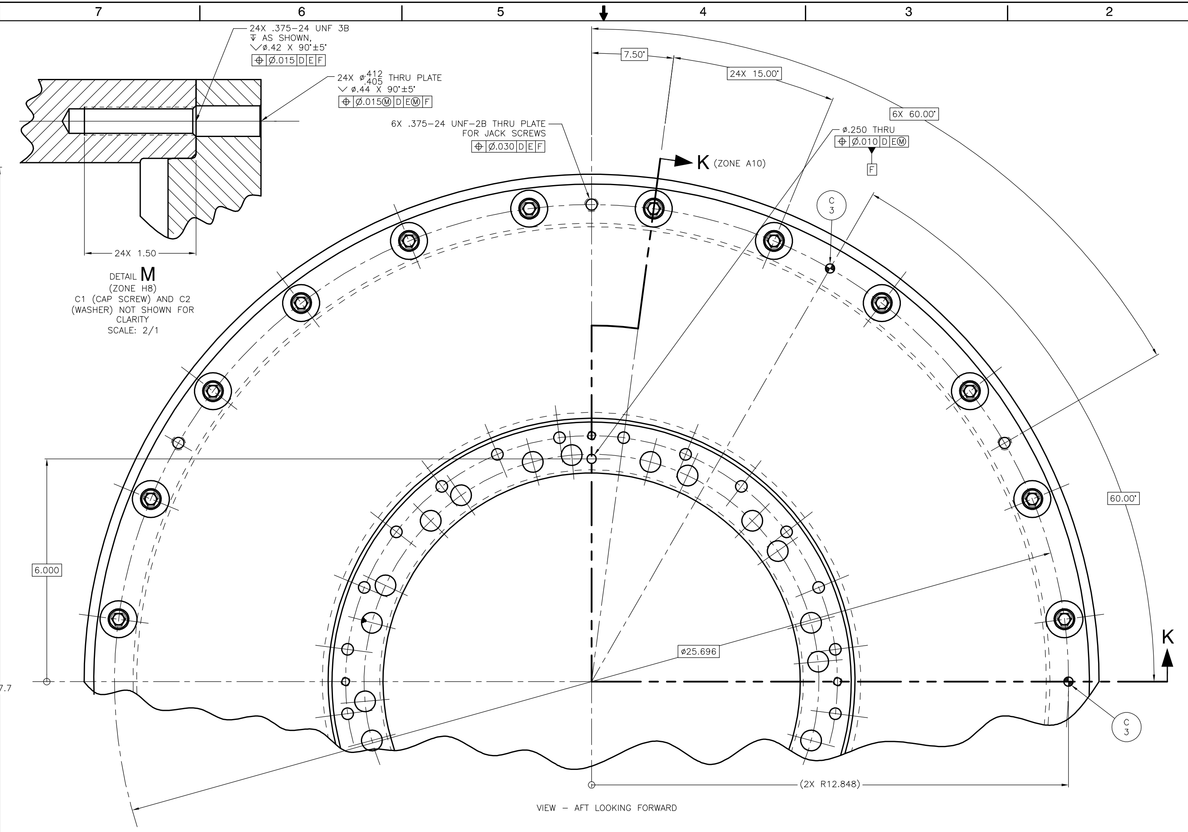

VIEW – AFT LOOKING FORWARD

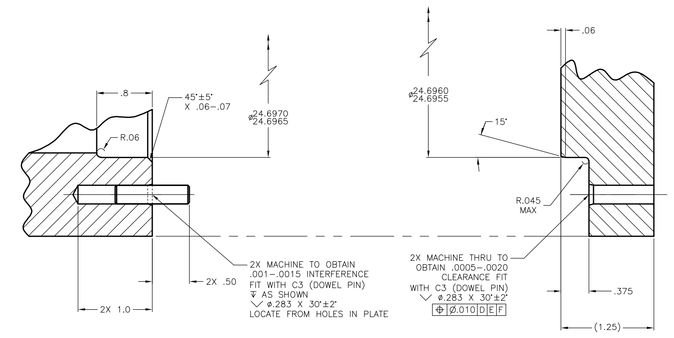

DETAIL L (ZONE A8)
SCALE: 2/1
PARTS SHOWN SEPARATED FOR CLARITY

1. SEE SHEET 01 FOR ADDITIONAL INFORMATION, GENERAL NOTES, AND TOLERANCES.
2. MATERIAL: RING FORGING: 304 STAINLESS STEEL PLATE: 304 STAINLESS STEEL CERTIFICATION OF MATERIAL MUST BE PROVIDED.
3. ALL DIMENSIONS AND PART IDENTIFICATION NOTE NOT SHOWN ARE THE SAME AS ON SHEET 01.
4. INSTALL FASTENERS USING SWAGELOK COMPANY SILVER GOOP ANTI–SEIZE COMPOUND OR EQUIVALENT SUITABLE FOR USE UP TO 700° F.

CONTROLLED DRAWING
AEROPROPULSION SYSTEMS
THIS DRAWING IS UNDER CONFIGURATION CONTROL. ANY CHANGES MUST BE APPROVED BY THE CONTROL AUTHORITY RESPONSIBLE FOR THIS DRAWING.
PRIOR TO PRODUCTION RELEASE

CHG NUM	DESCRIPTION	APP/DATE
	REVISIONS	

LAST APPROVED	NEW CHG	NO CHG NEEDED	NO NEW MAIL	NO NEW SHIPS
CHG NUMBER				

CAD DRAWING – DO NOT REVISE MANUALLY

NATIONAL AERONAUTICS AND SPACE ADMINISTRATION
JOHN H. GLENN RESEARCH CENTER
LEWIS FIELD
CLEVELAND, OHIO

BLDG 0023 ERB WEST WING
CELL W6 SINGLE SPOOL TURBINE FACILITY

DUMMY INNER HOUSING

SIZE CR	BLDG/SYM 0023 -	PROJECT # 00173391	DSCP / TYP SEQ - M- 501
AREA ERB WW			SHEET 02 OF 02
UNITS ENGLISH		SOFTWARE: AUTOCAD 2000	REVISION: -
SCALE: 1/2 AND NOTED		OPTIONAL DATE: 04/24/09	

(XXX)	SINGLE PART DRAWING
(XXX-1)	CHARTED PART DRAWING
(C)	COMMERCIAL PART
(E)	EXISTING PART

UNLESS OTHERWISE SPECIFIED DIMENSIONS ARE IN INCHES

TOLERANCE ON
.X ±.1
.XX ±.01
.XXX ±.005
FRACTION ±
ANGLES ±

DRAWN BY: C. CLEMENTS
TRACED BY: C. CLEMENTS
DATE: 04/24/2009
CHECKED BY: D. SCHUNK
DATE: 04/24/2009
ENGINEER: D. SCHUNK
DATE: 04/24/2009
PROJ MGR: D. SCHUNK
DATE: 04/24/2009
PROJ MGR: D. SCHUNK
DATE: 04/24/2009
DESIGN SCALE: 1/2

FD
FLOURNOY DRAFTING PROFESSIONS

PROPERTY OF UNITED STATES GOVERNMENT – ITS OFFICIAL USE ONLY
NOT TO BE REPRODUCED OR DISCLOSED WITHOUT PERMISSION