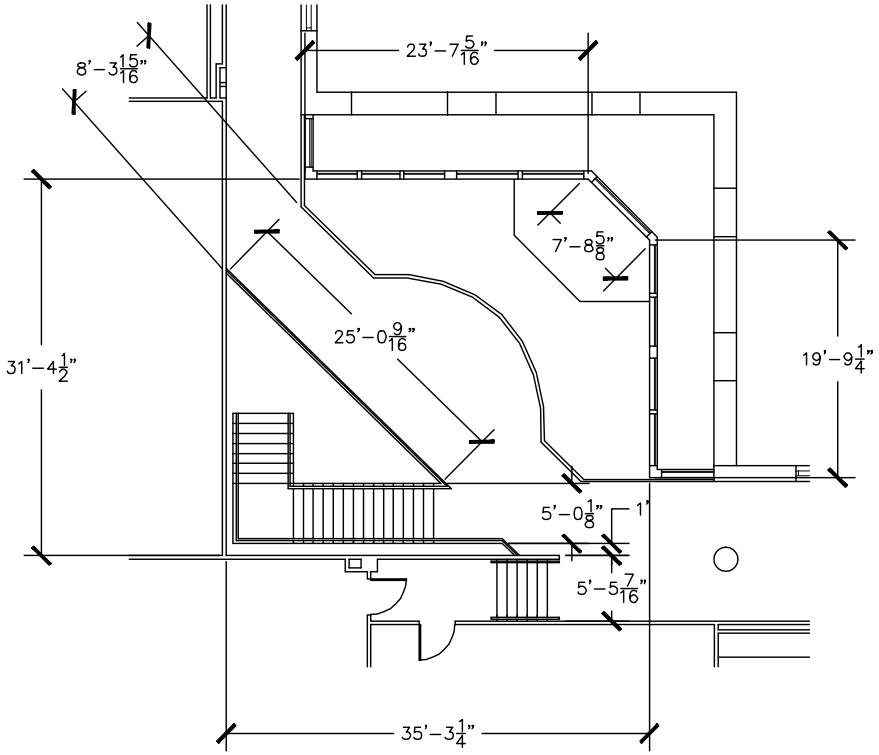

ATRIUM - SECOND FLOOR PLAN