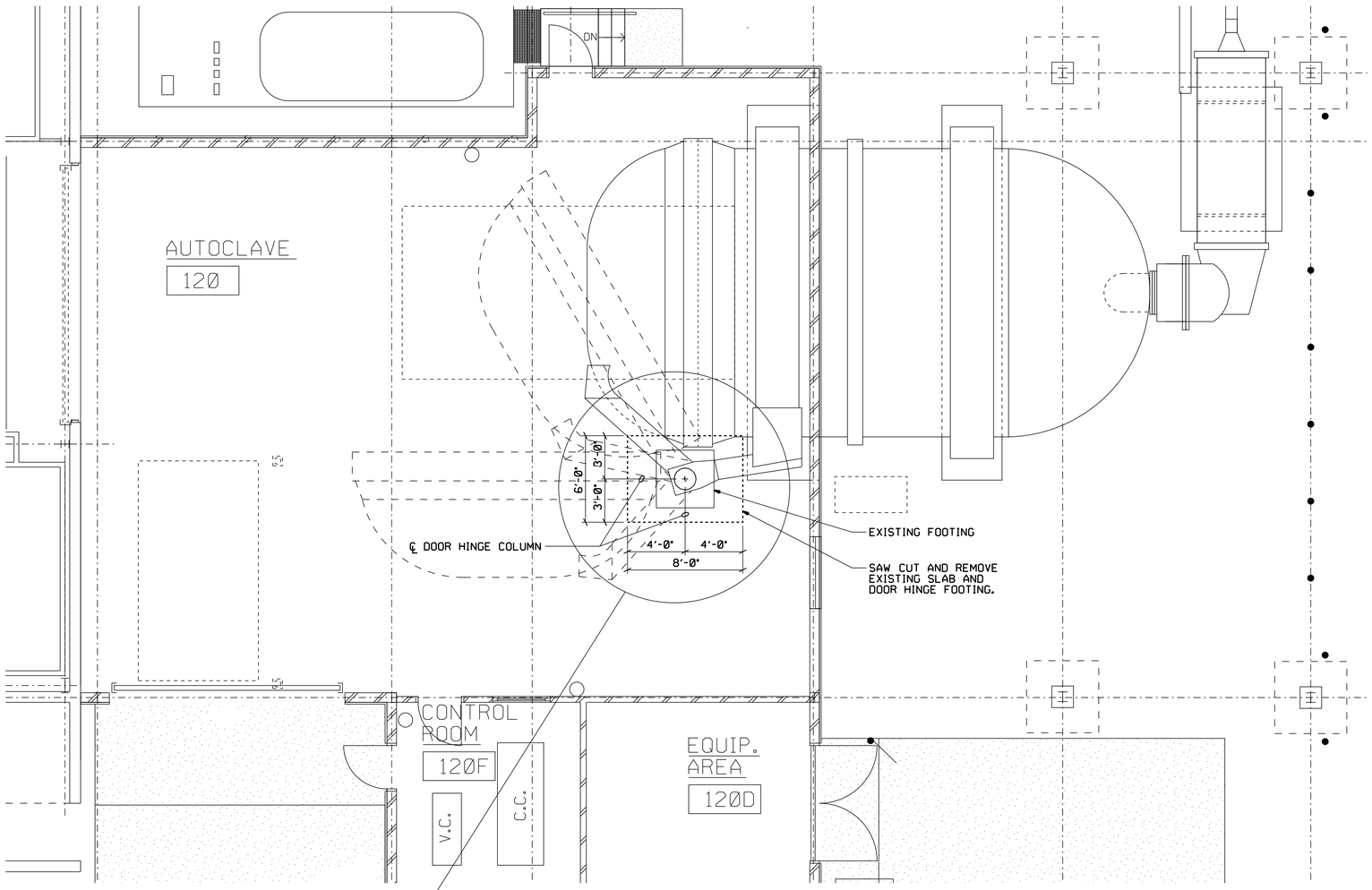

BUILDING 4707
PARTIAL FLOOR PLAN
SCALE: ¼" = 1'-0"
0 2' 4' 6'

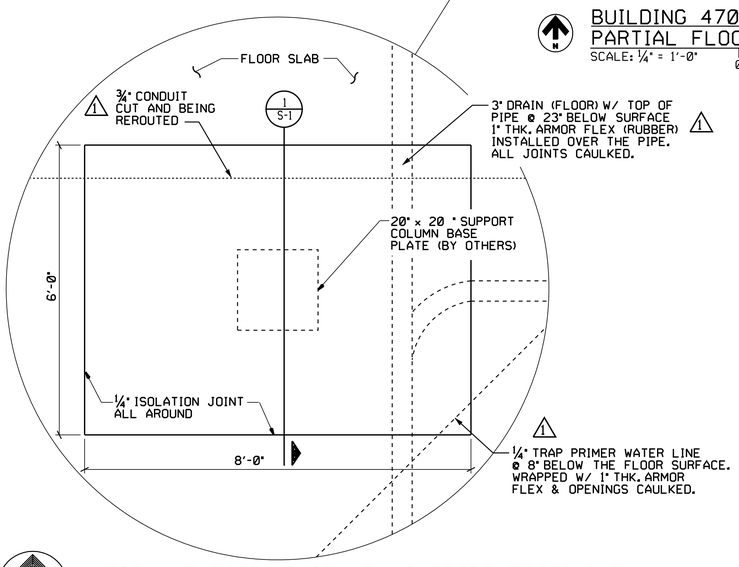

AUTOCLAVE DOOR HINGE NEW SUPPORT FOOTING PLAN
SCALE: ¾"= 1'-0"
0 1' 2'

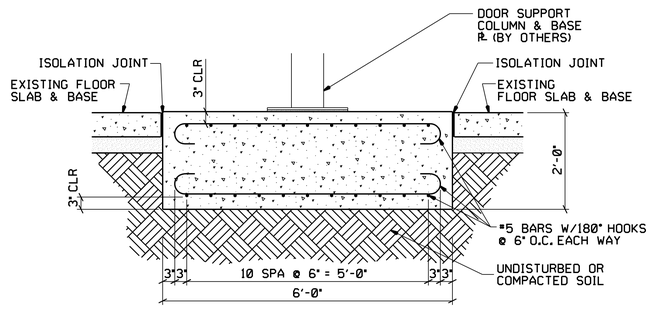

1 S-1 SUPPORT SLAB REINFORCING
SCALE: ¾"= 1'-0"
0 1' 2'

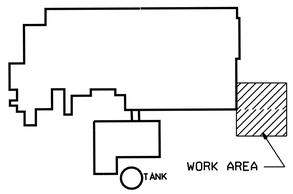

BUILDING 4707
KEY PLAN
N. T. S.

GENERAL NOTES

1. WORK SUMMARY: SAW-CUT AND REMOVE EXISTING CONCRETE SLAB AND FOOTING AS NECESSARY FOR NEW CONSTRUCTION. CONSTRUCT NEW REINFORCED CONCRETE FOOTING FOR SUPPORT OF EXISTING AUTOCLAVE DOOR HINGE AND RELATED WORK SHOWN ON DRAWING. PROVIDE MATERIALS, LABOR, AND INCIDENTALS NECESSARY FOR A COMPLETE JOB.
2. VERIFY ALL DIMENSIONS AND CONDITIONS AT THE SITE PRIOR TO FABRICATION AND CONSTRUCTION. WHERE DISCREPANCIES EXIST, CONFIRM COURSE OF ACTION WITH THE CONTRACTING OFFICER'S TECHNICAL REPRESENTATIVE (COTR) BEFORE PROCEEDING.
3. PRIOR TO BEGINNING CONSTRUCTION, CONTACT NASA AD21 AND OBTAIN A DIG PERMIT.
4. IF DISCOVERED DURING CONSTRUCTION, LOCATE AND MAP WITHIN THE WORK AREA ALL UNDOCUMENTED EXISTING UTILITY LINES. REFERENCE EACH UTILITY LINE HORIZONTAL LOCATION TO THE NEAREST BUILDING OR PERMANENT STRUCTURE BY TWO DIMENSIONS FOR EACH REFERENCE POINT. NOTE VERTICAL ELEVATIONS WITH RESPECT TO A MONUMENT OR A BUILDING FINISHED FLOOR. SUBMIT THESE NOTATIONS TO COTR PRIOR TO COMPLETION OF THE JOB. TAKE CARE TO PREVENT DAMAGE TO EXISTING UTILITIES.
5. PRIOR TO NEW FOOTING PLACEMENT, SOIL SHALL BE SAMPLED AND EVALUATED BY OTHERS (GEOTECHNICAL ENGINEER). IF REQUIRED BY ENGINEER'S EVALUATION, COMPACT SOIL UNDERNEATH NEW FOOTING AS DIRECTED BY GEOTECHNICAL ENGINEER, UP TO 95% MODIFIED PROCTOR DENSITY. IF SOIL IS COMPACTED, IT SHALL BE TESTED BY OTHERS TO ENSURE COMPACTION COMPLIANCE. CONTACT COTR TO COORDINATE TESTING ARRANGEMENT.
6. CONCRETE CONSTRUCTION AND PLACING SHALL BE IN ACCORDANCE WITH APPLICABLE SECTIONS OF ACI 301-89 AND ACI 302.1R-89. CONCRETE TESTING TO ENSURE COMPLIANCE SHALL BE BY OTHERS. CONTACT COTR TO COORDINATE TESTING ARRANGEMENT.
7. NO CONCRETE ADMIXTURES CONTAINING CHLORIDES ARE ALLOWED, UNLESS APPROVED BY THE COTR. DO NOT APPLY CURING COMPOUND TO NEW SURFACE. CURE USING OTHER APPROVED METHODS.
8. CARE SHALL BE TAKEN TO PREVENT DAMAGE OF EXISTING SLAB AND SURROUNDING AREA DURING NEW FOOTING CONSTRUCTION.
9. TOP OF CONCRETE SLAB SHALL HAVE A TROWELED FINISH, AS DEFINED IN CHAPTER 11 OF ACI 301-89.
10. TOP OF NEW FOOTING ELEVATION SHALL BE ⅛" HIGHER THAN EXISTING FINISHED FLOOR ELEVATION.
11. EXCEPT AS NECESSARY FOR CURING OPERATIONS, ALLOW NO LOADS ON THE NEWLY CONSTRUCTED CONCRETE FOOTING FOR A PERIOD OF SEVEN DAYS UNLESS AUTHORIZED BY THE COTR.
12. PROTECT NEWLY FINISHED CONCRETE FROM DAMAGE AT ALL TIMES.
13. REPAIR ALL DAMAGE MADE TO SURROUNDING AREA DURING CONSTRUCTION.

DESIGN AND MATERIAL DATA	
ALLOWABLE SOIL BEARING	2500 PSF
COLUMN SERVICE LIVE LOAD	66,000 LB.
CONCRETE	7 DAY MIN. COMPRESSIVE STRENGTH: 4000 PSI MAX. SIZE AGGREGATE: 1-1/2 INCHES SLUMP: 1 INCH TO 5 INCHES
REINFORCING STEEL	ASTM A615, GRADE 60
ISOLATION JOINT	¼ INCH THICK BITUMOUS BOARD

REDUCED SIZE DRAWING
DO NOT SCALE

CADD DWG.
CHANGES TO THIS DRAWING SHALL BE MADE ON CADD ONLY.
169093 03-29-00 JRW
LATEST CADD UPDATE: 05-17-01 10:30 AM
BY: FLETCHER

CONCURRENCE: DATE:
AD21 PLANNING OFFICE
CONCURRENCE: DATE:
AD22 PROJECT MANAGER
CONCURRENCE: DATE:
AD10 ENVIRONMENTAL ENGINEERING DEPT
CONCURRENCE: DATE: 04-17-00
STEVEN W. BURLINGAME
USING OFFICE
CONCURRENCE: DATE: 04-20-00
ED CORNELIUS
AD24 OPERATIONS & MAINTENANCE GROUP
CONCURRENCE: DATE: 04-17-00
JIM BULT
AD60 ENVIRONMENTAL HEALTH
CONCURRENCE: DATE: 04-18-00
VYGANTAS P. KULPA
OD50 SAFETY OFFICE
CONCURRENCE: DATE: 04-17-00
CHARLES B. WINKLER
AD32 COMMUNICATIONS OFFICE
TELECOMMUNICATIONS EQUIPMENT AFFECTED BY THIS CONTRACT WORK IS NOT TO BE ALTERED OR REMOVED BY THE CONTRACTOR, CONTACT THE COTR IN THE EVENT OF A CONFLICT

REF. NO. S-1 OF 1

REV.	BY	DATE	REVISION	C.A. NO.	APPROVED
1	JAF	05/17/01	AS-BUILT PER REDLINE		

Marshall Space Flight Center
Huntsville, Alabama 35812

WORK REQUEST NO. 169093

BUILDING 4707

REPLACE AUTOCLAVE DOOR HINGE FOOTING
PLAN, SECTION, AND NOTES

AE FIRM: AJT & ASSOCIATES, INC. HUNTSVILLE - ALABAMA
NASA AE CONTRACT NO. NASA- 40083

SUBMITTED: HOWARD C. BOZEMAN
APPROVAL RECOMMENDED: DENNIS L. NORRIS
APPROVED: R.B. FELDER

AE: DATE: 04-17-00
AD22 PROJ. A/E DATE: 04-24-00
AD22 GROUP LEAD DATE: 04-26-00

DESIGNED: D. SELLERS
DRAWN: R. WILLIS/THOMPSON
CHECKED: R.S. TALIANKO
APPROVAL RECOMMENDED: ARTHUR HARGROVE JR
AD22 TEAM LEAD DATE: 04-24-00
SCALE: AS NOTED
SPEC. NO. TSRC-2

DRAWING NO. FAC-GZ-4707-S1
SHEET 1 OF 1

MSFC-FORM 232 REV. 8-21-89-RCL