REVISIONS				
ZONE	REV	DESCRIPTION	DATE	APPROVED
	A	SEE ECN 16942	98-01-26	RvonHd
	B	SEE ECN 17253	98-04-21	RvonHd
	C	SEE ECN 17265	98-05-12	[illegible]

NOTES: UNLESS OTHERWISE SPECIFIED

1. INTERPRET DRAWING PER MIL-STD-100E & DIMENSIONS & TOLERANCES PER ANSI Y14.5M-1982.
2. ASSEMBLE AND PROCESS PER OCA 14394.
3. ITEMS 2, 3, 4, AND 8 TO BE PLASTIC DOWEL IN PLACE IN ACCORDANCE WITH AOO 15048 AFTER ALL OPTICAL TEST.
4. SCREW TORQUE VALUES. USE TORQUE WRENCH WITH ±0.1 IN ACCURACY, IN./POUNDS.

SCREW SIZE	.250-28	.190-32	.168-32
FINAL ASSEMBLY	58	26	16
FABRICATION	29	13	8

5. ADDITIONAL MACHINING MAY BE REQUIRED FROM SPACER THICKNESS TO MEET OPTICAL REQUIREMENTS.
6. TRIM SCREW LENGTH TO 3/16 LONG.

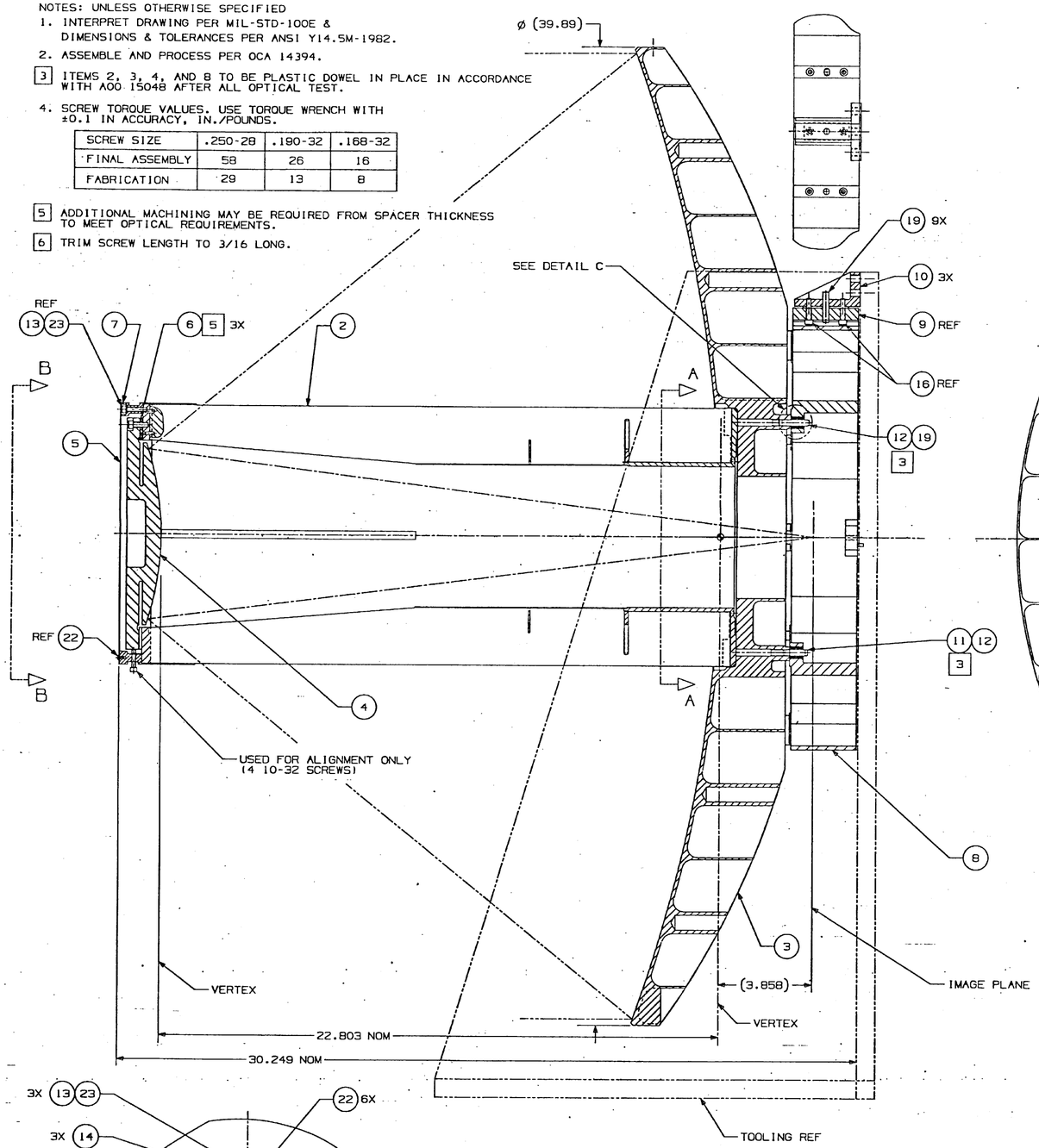

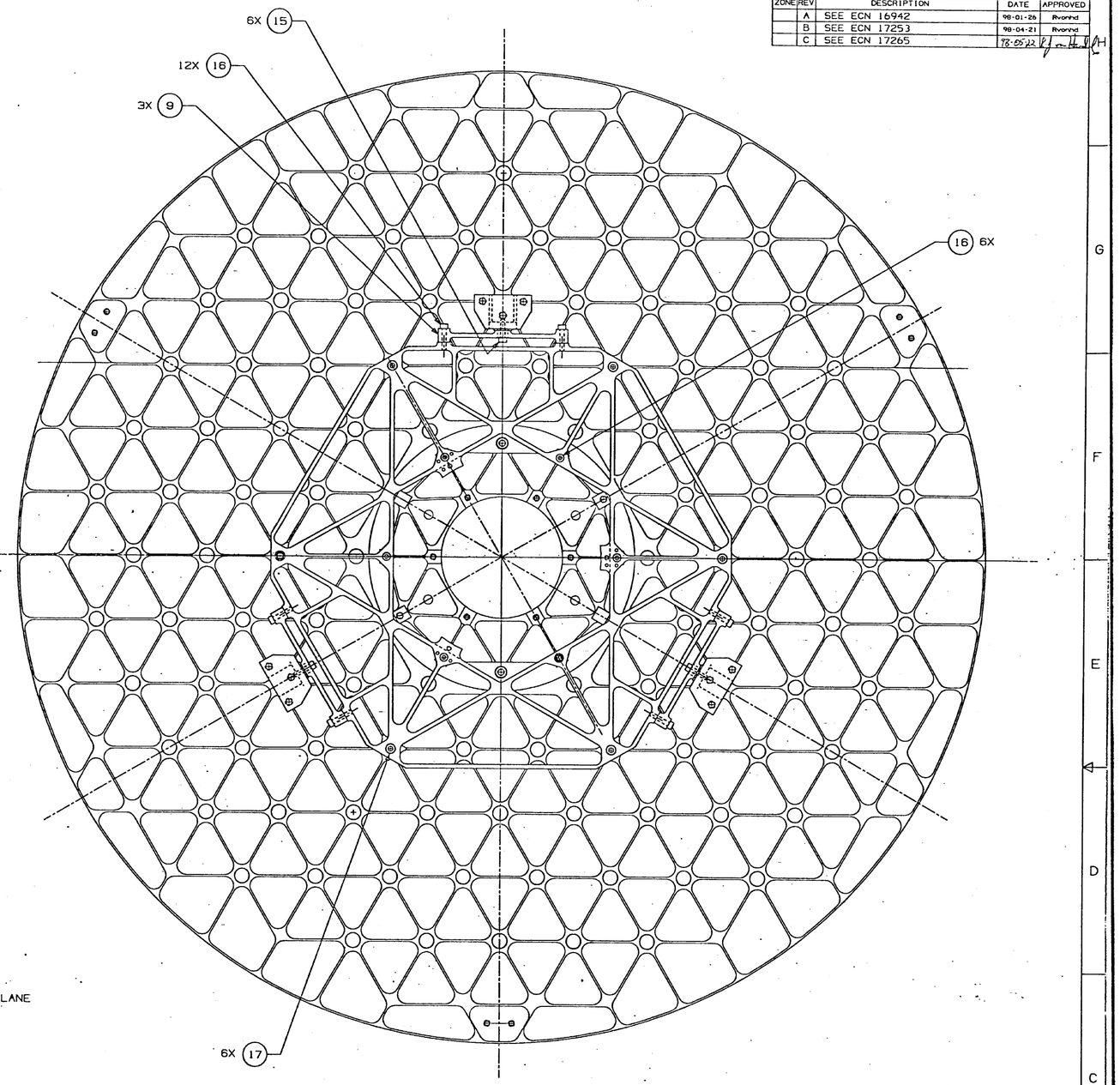

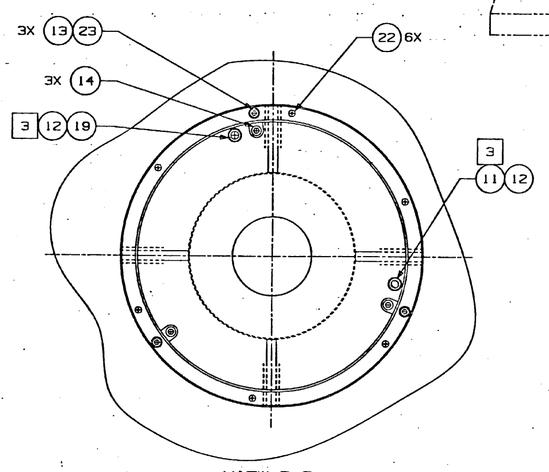

VIEW B-B
SHOWN WITH ITEM 5 REMOVED

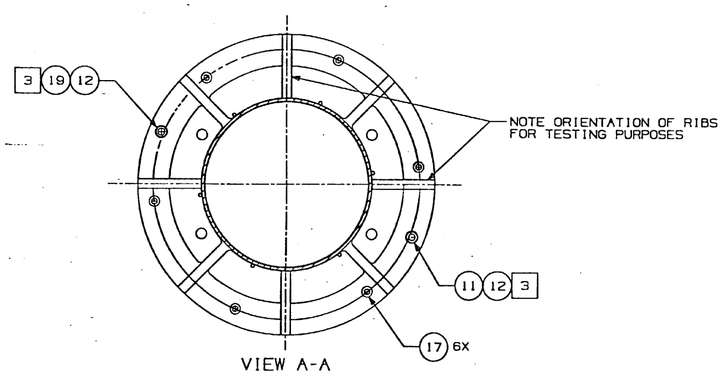

VIEW A-A

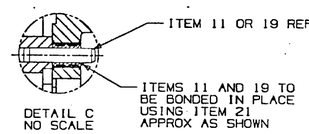

DETAIL C
NO SCALE

QTY REQD	CAGE NO.	PART OR IDENTIFYING NO.	NOMENCLATURE OR DESCRIPTION	MATERIAL SPECIFICATION	ITEM NO.
					24
3		001237-23	WASHER, BELLEVILLE SPRING	PIC D6-23	23
6		000960-4	SCREW, BUTTON HD., CAP	6-32 X 1/4 LG	22
AR		000151	ADHESIVE	3M EC-2216B/A	21
AR		003163-NA	ADHESIVE	HYSOL EA934NA	20
12		MS16555-647	PIN, DOWEL	1/4 Ø X 7/8 LG	19
					18
12		MS16996-24	SCREW, SOC. HD., CAP	1/4-28 X 1" LG	17
18		MS16996-13	SCREW, SOC. HD., CAP	10-32 X 7/8 LG	16
6		MS16996-12	SCREW, SOC. HD., CAP	10-32 X 3/4 LG	15
3		MS16996-11	SCREW, SOC. HD., CAP	10-32 X 5/8 LG	14
3		MS16995-29	SCREW, SOC. HD., CAP	8-32 X 7/8 LG	13
6		700-7304-137	BUSHING, KNURL		12
3		700-4169-19	PIN, DOWEL, DIAMOND SHAPE	1/4 Ø X 3/4 LG	11
3		880-2212	BRACKET, ANGLE		10
3		880-2211	FLEXTURE		9
1		880-2210	INTERFACE STRUCTURE		8
1		880-2209	COVER, FRONT		7
1		880-2208	SPACER, FOCUS		6
1		880-2207	DISC, COVER		5
1		880-2201	SECONDARY MIRROR		4
1		880-2200	PRIMARY MIRROR		3
1		880-0321	SEC SUPPORT-BAFFLE ASSY		2
REF		880-0320	MBLA TELESCOPE ASSY		1

PARTS LIST

WEIGHTS			
STRESS			
MATERIALS & PROCESSES			
MANUFACTURING ENGRG S HOSKINS	97-11-12		
QUALITY ASSURANCE R BAUMAN	97-11-12		
ADDITIONAL APPROVALS	DATE		

PART DASH NO.	NEXT FINAL	NEXT ASSY	USED ON
	QTY REQD PER ASSY	APPLICATION	

UNLESS OTHERWISE SPECIFIED DIMENSIONS ARE IN INCHES
TOLERANCES ARE
FRACTIONS DECIMALS ANGLES
± XX ±0.01 ±1/2°
.XXX ±0.005
DO NOT SCALE DRAWING

TREATMENT NOTED
FINISH NOTED
SIMILAR TO | ACT. WT | CALC WT

CONTRACT NO.
APPROVALS / DATE
DRAWN R NICHOLSON 97-11-05
CHECKED A TELKAMP 97-11-12
PE R vonHANDORF 97-11-12
PM R vonHANDORF 97-11-12

OCA APPLIED OPTICS
7451 ORANGEWOOD AVE., GARDEN GROVE, CA 92641

GLAS TELESCOPE ASSY

SIZE E | CAGE NO. 16735 | DWG NO. 880-0320 | REV. C
SCALE 1/2 | RELEASE DATE 97- | SHEET 1 OF 1

880-0320

CAD SYS: OCA | FILE: MBLA | RETRIEVE: 880-0320XX | LAYER(S): 1