SYMBOLS

SINGLE LINE DIAGRAM

- T1 45KVA — TRANSFORMER, DESIGNATION AND RATINGS AS NOTED
- Y GROUND
- 100AF 100AT — CIRCUIT BREAKER: 100AF = FRAME RATING IN AMPERES 100AT = TRIP RATING IN AMPERES
- 800A — DRAWOUT CIRCUIT BREAKER: TRIP RATING AS SHOWN, 3 POLE UNO
- POTENTIAL TRANSFORMER WITH FUSES
- CURRENT TRANSFORMER
- GROUND
- 1R — MAGNETIC MOTOR STARTER: 1–NEMA SIZE, R–REDUCED VOLTAGE
- VFD — VARIABLE FREQUENCY DRIVE
- ½ OR M — 1ø OR 3ø MOTOR: NUMBER INSIDE SYMBOL INDICATES HORSEPOWER
- S_M — MANUAL MOTOR STARTER WITH THERMAL OVERLOAD – 1ø
- TVSS — GROUND FAULT PROTECTION
- GFP — GROUND FAULT PROTECTION
- EPM — POWER MODULAR METER

LIGHTING

- A — LIGHTING FIXTURE IDENTIFICATION SYMBOL: SEE LIGHTING FIXTURE SCHEDULE ON SHEET E–010
- 6"x4' PENDANT MOUNTED FLUORESCENT
- LINEAR WALL MOUNTED FLUORESCENT
- INDUSTRIAL OR STRIP FLUORESCENT – SURFACE MOUNTED OR CHAIN HUNG
- WALL MOUNTED FIXTURE
- SURFACE MOUNTED DOWNLIGHT
- RECESSED MOUNTED DOWNLIGHT
- EXIT SIGN: WALL MOUNTED, DARKENED AREA INDICATES FACE
- EXIT SIGN: CEILING MOUNTED, DARKENED AREA INDICATES FACE
- TRACK LIGHTING
- BOLLARD
- STEP LIGHT WALL RECESSED
- ACCENT LIGHTING GROUND SURFACE MOUNTED
- IN GROUND STEP LIGHT
- UNSWITCHED LIGHT FIXTURES ON IN VERTER LIFE/SAFETY CIRCUITS

SWITCHES

INSTALL AT +48" UNO

- S — SINGLE POLE SWITCH, 20A, 120/277V
- S_2 — DOUBLE POLE SWITCH, 20A, 120/277V
- S_3 — THREE–WAY SWITCH, 20A, 120/277V
- S_4 — FOUR–WAY SWITCH, 20A, 120/277V
- S_a — SWITCH CONTROLS FIXTURE MARKED WITH SUBSCRIPT INDICATED
- S_D — DIMMER SWITCH: 1500 WATT FLUORESCENT TYPE UNO
- WALL MOUNTED OCCUPANCY SENSOR WITH LOCAL SWITCHING, MANUAL ON/AUTO OFF
- CEILING OR PENDANT MOUNTED OCCUPANCY SENSOR, AUTO ON/AUTO OFF
- S_M — MOTOR RATED SWITCH, 1ø
- MOTOR STARTER: MAGNETIC, SIZE AS NOTED
- DISCONNECT/COMBINATION MOTOR STARTER: SIZE AS NOTED
- DISCONNECT SWITCH: NON FUSED, SIZE AS NOTED, 600V–3ø
- F — DISCONNECT SWITCH: FUSED, SIZE AS NOTED, 600V–3ø
- TS — TIMER SWITCH
- PE — DAYLIGHT SENSOR
- LC — LIGHTING CONTROL SWITCH

MISCELLANEOUS

- D — MAGNETIC DOOR CONTACT
- CR — CARD READER
- RE — REQUEST TO EXIT

PANELBOARDS AND POWER EQUIPMENT

- RECESSED MOUNTED PANELBOARD
- SURFACE MOUNTED PANELBOARD
- SWITCHBOARD OR DISTRIBUTION BOARD
- MCC: MOTOR CONTROL CENTER
- ½ OR M — MOTOR: HORSEPOWER AS INDICATED
- PUSHBUTTON STATION
- A 01 — MECHANICAL EQUIPMENT IDENTIFICATION SYMBOL
- T — DRY TYPE TRANSFORMER

GROUNDING

- G — BURIED BARE COPPER GROUND WIRE, SIZE AS SHOWN
- G — EXPOSED BARE COPPER GROUND WIRE, SIZE AS SHOWN
- 3/4" DIAMETER X 10'–0" GROUND ROD
- GROUNDING TEST BOX WITH 3/4" DIAMETER X 10'–0" GROUND ROD
- CHEMICAL GROUND WELL
- AIR TERMINAL
- GROUND BAR

RECEPTACLE/OUTLETS

NOTE: ALL WALL MOUNTED OUTLETS AND RECEPTACLES SHALL BE RECESSED AT 18" ABOVE FINISHED FLOOR FROM CENTERLINE OF DEVICE, UNO

- SINGLE RECEPTACLE, NEMA 5–20R, GROUNDING TYPE
- GFI — DUPLEX RECEPTACLE, NEMA 5–20R, GROUNDING TYPE, GFI INDICATES GROUND FAULT INTERRUPTER TYPE
- DUPLEX RECEPTACLE FLOOR MOUNTED, NEMA 5–15R
- QUAD RECEPTACLE, NEMA 5–20R, GROUNDING TYPE
- QUAD RECEPTACLE, NEMA 5–20R, FLOOR MOUNTED
- DUPLEX RECEPTACLE, NEMA 5–20R, ISOLATED GROUND TYPE
- DUPLEX RECEPTACLE, FLOOR MOUNTED, ISOLATED GROUND TYPE
- SPECIAL RECEPTACLE TYPE AS NOTED
- J — JUNCTION BOX: RECESSED OR CEILING MOUNTED
- J — JUNCTION BOX: WALL MOUNTED
- TELEPHONE OUTLET: WALL MOUNTED AT +54"
- COMBINATION TELEPHONE/DATA OUTLET: WALL MOUNTED
- COMBINATION TELEPHONE/DATA OUTLET: FLOOR MOUNTED
- DATA OUTLET: WALL MOUNTED

CIRCUITING AND WIRING

- CIRCUIT/CONDUIT EXPOSED, 3/4"C, UNO
- CIRCUIT/CONDUIT CONCEALED IN WALL OR CEILING, 3/4"C MIN UNO
- CIRCUIT/CONDUIT BELOW SLAB OR GRADE
- LA1–2,4 — HOMERUN TO PANEL WITH CIRCUIT NUMBERS AS INDICATED
- GROUND / ISOLATED GROUND — SHORT HASH MARKS INDICATE QUANTITY OF #12 CONDUCTORS IN CODE SIZE CONDUIT. LONG HASH MARK INDICATES NEUTRAL CONDUCTOR. NO HASH MARKS INDICATE 3#12 (2#12 & 1#12G.) IN 3/4" CONDUIT, TYP UNO
- CONDUIT STUB UP
- CONDUIT STUB DOWN
- CONDUIT STUB–OUT WITH CAP
- FLEXIBLE CONDUIT
- E — UNDERGROUND ELECTRICAL DUCT BANK
- T — TELEPHONE LINE
- PB — PULL BOX
- E — ELECTRICAL POWER MANHOLE
- C — COMMUNICATION MANHOLE
- H — HANDHOLE
- T — TRANSFORMER, PAD MOUNTED

PROJECT STATUS: BID SET 04/27/09

ISSUE

MARK	DATE	DESCRIPTION	INITIAL

		DATE
DRAWN	S. KANDA	
DESIGNED	N. ZECH	
CHECKED	D. KING	
PROJMGR	J. GRANT	
REQUESTOR	R. SCHULER	
RSGA		
SAFETY		
SUPERVISOR	S FRANKEL	

Ames Research Center
Moffet Field, California

N232 COLLABORATIVE SUPPORT FACILITY
ELECTRICAL
SYMBOLS

SIZE	CAGE CODE		REV
D	25307	A232-0800- E001	

SCALE | INDEX | SHEET OF

DWG: Q:\60048683 – NASA Ames CSF N232\500 CAD\E\Sheet\E001.dwg User: zechn
DATE: Apr 28, 2009 – 10:25:12 am Images:
Xrefs: XBOR

ABBREVIATIONS

A	AMPERE
AF	AMPERE FRAME
AFF	ABOVE FINISHED FLOOR
AFG	ABOVE FINISHED GRADE
AIC	AMPERES INTERRUPTING CAPACITY (RMS SYMMETRICAL)
APPROX	APPROXIMATELY
AS	AMPERE SWITCH
AT	AMPERE TRIP
ATS	AUTOMATIC TRANSFER SWITCH
BC	BARE COPPER
BKBD	BACKBOARD
BKR	BREAKER
BLDG	BUILDING
C	CONDUIT
CB	CIRCUIT BREAKER
CCTV	CLOSE CIRCUIT TELEVISION
CIRC	CIRCULAR, CIRCUIT
CKT	CIRCUIT
℄	CENTERLINE
CLG	CEILING
CO	CONTRACTING OFFICER
COMM	COMMUNICATIONS
CONC	CONCRETE
CONT	CONTINUED
CONT'L	CONTROL
CONTR	CONTROLLER
COTR	CONTRACTING OFFICER TECHNICAL REPRESENTATIVE.
CPT	CONTROL POWER TRANSFORMER
CT	CURRENT TRANSFORMER
DDC	DIRECT DIGITAL CONTROL
DET	DETAIL
DF	DEMAND FACTOR
DIA	DIAMETER
DISC	DISCONNECT
DIST	DISTRIBUTION
DTC	DATA TERMINAL CABINET
DVR	DIGITAL VIDEO RECORDER
DWG	DRAWING
DWP	DEPARTMENT OF WATER AND POWER
E	EXISTING
E/G	EMERGENCY GENERATOR
ELEC	ELECTRICAL
EMH	ELECTRICAL MANHOLE
EPO	EMERGENCY POWER OFF
EPU	EMERGENCY POWER UNIT
EQUIP	EQUIPMENT
EES	EARTH ELECTRODE SYSTEM
EXIST	EXISTING
FA	FIRE ALARM
FACP	FIRE ALARM CONTROL PANEL
FLA	FULL LOAD AMPS
FL, FLR	FLOOR
FLUOR	FLUORESCENT
FO	FIBER OPTIC
FOT	FIELD OPERATIONAL TEST
FT	FEET
GFCI	GOVERNMENT FURNISHED, CONTRACTOR INSTALLED
GFE	GOVERNMENT FURNISHED EQUIPMENT
GFI	GROUND FAULT INTERRUPTER
GND	GROUND
GRN	GREEN
HID	HIGH INTENSITY DISCHARGE
HH	HANDHOLE
HPF	HIGH POWER FACTOR
HPS	HIGH PRESSURE SODIUM
HT	HEIGHT
HV	HIGH VOLTAGE
HZ	HERTZ
IC	INTERCOM
IG	ISOLATED GROUND
IN	INCHES
INCAND	INCANDESCENT
J-BOX	JUNCTION BOX
KA	KILO AMPERE
kcmil	THOUSAND CIRCULAR MILLS
KVA	KILOVOLT AMPERE
KW	KILOWATT
KWH	KILOWATT-HOUR
L	LAN
LAN	LOCAL AREA NETWORK
LP	LAN PRINTER, LIGHTNING PROTECTION
LT	LIGHT
LTG	LIGHTING
LC	LIGHTING CONTROL
MAX	MAXIMUM
MCA	MINIMUM CIRCUIT AMPACITY
MCB	MAIN CIRCUIT BREAKER
MCC	MOTOR CONTROL CENTER
MDP	MAIN DISTRIBUTION PANELBOARD
MDS	MAIN DISTRIBUTION SWITCHBOARD
MECH	MECHANICAL
MH	METAL HALIDE, MANHOLE
MIN	MINIMUM
MLO	MAIN LUGS ONLY
MOCP	MAXIMUM OVERCURRENT PROTECTION
MT	MOUNT
MTD	MOUNTED
MTG	MOUNTING
MTS	MANUAL TRANSFER SWITCH
N.C.	NORMALLY CLOSE
NEC	NATIONAL ELECTRICAL CODE
NEMA	NATIONAL ELECTRICAL MANUFACTURER ASSOCIATION
NIC	NOT IN CONTRACT
N.O.	NORMALLY OPEN
NTS	NOT TO SCALE
OC	ON CENTER
OH	OVERHEAD
PA	PUBLIC ADDRESS
PB	PULLBOX
PIR	PASSIVE INFRARED
PNL	PANEL
PP	POWER PACK
PT	POTENTIAL TRANSFORMER
PTZF	PAN TILT ZOOM FOCUS
PVC	POLY VINYL CHLORIDE
REC	RECEPTACLE
RGS	RIGID GALVANIZED STEEL
RM	ROOM
REQ'D	REQUIRED
SCE	SOUTHERN CALIFORNIA EDISON
SCH	SCHEDULE
SHD	SHIELDED
SHT	SHEET
SMFO	SINGLE MODE FIBER OPTIC CABLE
SRG	SIGNAL REFERENCE GRID
SRL	SOUTHERN REGIONAL LAB
SW	SWITCH
SWBD	SWITCHBOARD
SWGR	SWITCHGEAR
SYM	SYMMETRICAL
T, TEL	TELEPHONE
TB	TELEPHONE BACKBOARD
TBD	TO BE DETERMINED
TC	TERMINAL CABINET
TMC	TRANSPORTATION MANAGEMENT CENTER
TVSS	TRANSIENT VOLTAGE SURGE SUPPRESSION
TYP	TYPICAL
U/G	UNDERGROUND
UNO	UNLESS NOTED OTHERWISE
UON	UNLESS OTHERWISE NOTED
UPS	UNINTERRUPTIBLE POWER SUPPLY
V	VOLT
VFD	VARIABLE FREQUENCY DRIVE
VT	VOLTAGE TRANSFORMER
W	WATT
W/	WITH
WP	WEATHERPROOF
XP	EXPLOSION PROOF
XFMR	TRANSFORMER

GENERAL NOTES:

1. DO NOT SCALE ELECTRICAL DRAWINGS FOR FIXTURES, DEVICES OR APPLIANCE LOCATIONS. USE FIGURED DIMENSIONS IF GIVEN OR CHECK MECHANICAL AND ARCHITECTURAL PLANS.
2. REVIEW AND VERIFY MECHANICAL DRAWINGS FOR ABBREVIATION LIST AND EQUIPMENT CALLOUT. COORDINATE AND PROVIDE ALL POWER WIRING AND DEVICES AS REQUIRED FOR MECHANICAL EQUIPMENT SHOWN ON MECHANICAL DRAWINGS BUT NOT SHOWN ON THE ELECTRICAL DRAWINGS.
3. REFER TO MECHANICAL DRAWINGS FOR ABBREVIATION LIST, EQUIPMENT CALLOUT AND EXACT EQUIPMENT LOCATIONS.
4. VERIFY EXACT LOCATION AND DIMENSION OF ALL EQUIPMENT, FIXTURE OR OUTLETS WITH OTHER TRADES AND MANUFACTURERS PRIOR TO ROUGH-IN.
5. VERIFY POINT AND METHOD OF CONNECTION TO MECHANICAL EQUIPMENT WITH MECHANICAL CONTRACTOR IN FIELD PRIOR TO ROUGH-IN.
6. COORDINATE ALL ROOF PENETRATIONS WITH MECHANICAL CONTRACTOR. ENTER ROOF MOUNTED UNITS THROUGH EQUIPMENT MOUNTING CURBS WHERE POSSIBLE.
7. FUSE RATINGS OF ALL HVAC EQUIPMENT SHALL BE ACCORDING TO NAMEPLATE OF EACH RESPECTIVE EQUIPMENT OR MANUFACTURER RECOMMENDATION.
8. COORDINATE ELECTRIC AND TELEPHONE SERVICE WITH UTILITY COMPANIES. PROVIDE ALL TRENCHING, CONDUITS, CONDUCTORS, METER SOCKETS AND ANY OTHER FACILITIES REQUIRED BY THE UTILITY COMPANIES.
9. TRENCHING AND BACKFILLING SHALL BE IN ACCORDANCE WITH THE SPECIFICATIONS FOR UNDERGROUND SYSTEM. ALL SITE WORK SHALL BE STAKED OUT FOR APPROVAL BY THE NASA CO. NO SITE WORK SHALL START UNTIL STAKE-OUT IS APPROVED BY THE NASA CO.
10. VISIT THE JOB SITE AND VERIFY EXISTING CONDITIONS BEFORE BIDDING AND INCLUDE ALL NECESSARY COST TO CONSTRUCT THIS PROJECT IN ACCORDANCE WITH THE INTENT OF THE ELECTRICAL DRAWINGS, SPECIFICATIONS, AND ALL APPLICABLE CODES.
11. SPECIFIC CARE SHALL BE TAKEN TO INSTALL EXPOSED SYSTEM TO ENSURE A NEAT AND WORKMAN LIKE FINAL INSTALLATION WITH ALL CONDUITS ROUTED TIGHT TO THE STRUCTURE AND PARALLEL TO OR 90 DEGREES TO STRUCTURAL MEMBERS. AFTER INSTALLATION IS COMPLETE, PROPERLY CLEAN ALL CONDUIT FITTINGS, J-BOXES AND SUPPORT BRACKETS.
12. ALL ELECTRICAL MATERIAL SHALL BE NEW AND LISTED BY THE UNDERWRITERS LABORATORIES INC. (UL) IF THE RESPECTIVE STANDARDS HAVE BEEN ESTABLISHED IN UL PUBLICATIONS.
13. ALL CONDUIT PENETRATIONS THROUGH FIRE RATED WALLS AND FLOORS SHALL BE SEALED WITH APPROVED SEALANT TO MAINTAIN FIRE SEPARATION RATING.
14. COORDINATE WITH MECHANICAL CONTRACTOR AND PROVIDE ALL TEMPERATURE CONTROL CONDUITS, FMCS CONDUITS AND MISC LOW VOLTAGE CONDUITS, PROVIDE ¾" CONDUIT AS A MINIMUM. TEMPERATURE CONTROL WIRING, FMCS WIRING AND OTHER LOW VOLTAGE CONTROL WIRING SHALL BE AS SPECIFIED BY MECHANICAL.
15. DO NOT INSTALL ANY POWER OR TELEPHONE OUTLETS BACK TO BACK IN STUD WALLS. LOCATE OUTLETS SUCH THAT THEY ARE SEPARATED BY A WALL STUD.
16. COORDINATE THE INSTALLATION OF ALL RECESSED LIGHT FIXTURES WITH MECHANICAL DUCTWORK PRIOR TO INSTALLATION OF HVAC DUCTS AND SPRINKLER HEADS. ENSURE THAT THERE IS NO CONTACT BETWEEN DUCTS AND FIXTURES AND AVOID REFLECTOR VIBRATION IN PARABOLIC FIXTURES.
17. PROVIDE NYLON PULL WIRE NOT LESS THAN 1/4" IN ALL EMPTY CONDUITS AND INNER DUCTS INSTALLED WITHIN CONDUIT.
18. PROVIDE GROUND WIRE IN ALL BRANCH CIRCUIT AND LIGHTING CONDUITS WHETHER OR NOT SPECIFICALLY SHOWN. THE GROUND WIRE SHALL BE SIZED IN ACCORDANCE WITH NEC.
19. ALL CIRCUIT BREAKERS & DISCONNECT SWITCHES SHOWN ON DRAWINGS ARE THREE POLE, UNLESS OTHERWISE NOTED.
20. ALL BUILDING EXTERIOR MOUNTED EQUIPMENT AND DEVICES SHALL BE IN NEMA 3R ENCLOSURE.
21. THE ELECTRICAL INSTALLATION SHALL COMPLY WITH THE 2008 NATIONAL ELECTRICAL CODE, 2007 CALIFORNIA ELECTRICAL CODE, AND ALL OTHER GOVERNING CODES AND ORDINANCES.
    FOR ALL ELECTRICAL SWITCHBOARD AND PANELBOARD THE SPACE EQUAL TO THE WIDTH AND DEPTH OF THE EQUIPMENT AND EXTENDING FROM THE FLOOR TO A HEIGHT OF 6FT ABOVE THE EQUIPMENT OR TO THE STRUCTURAL CEILING, WHICHEVER IS LOWER, SHALL BE DEDICATED TO THE ELECTRICAL INSTALLATION. NO PIPING, DUCT OR EQUIPMENT FOREIGN TO THE ELECTRICAL INSTALLATION SHALL BE LOCATED IN THIS ZONE, AS INDICATED IN NEC 110.26F.
22. IN THE EVENT OF DISCREPANCY BETWEEN LIGHTING PLANS AND ARCHITECTURAL REFLECTED CEILING PLANS, THE ELECTRICAL PLAN DRAWINGS SHALL GOVERN. DISCREPANCY SHALL BE BROUGHT TO THE ATTENTION OF THE CO.
23. UNLESS SPECIFICALLY SHOWN ON THESE PLANS NO STRUCTURAL MEMBER SHALL BE CUT, NEITHER DRILLED NOR NOTCHED WITHOUT PRIOR WRITTEN AUTHORIZATION FROM THE STRUCTURAL ENGINEER AND THE NASA CO.
24. OUTLET BOXES ON OPPOSITE SIDES OF FIRE-RESISTIVE WALLS SHALL BE SEPARATED BY A HORIZONTAL DISTANCE OF 24 INCHES (CBC SECTION 709.7 EXCEPT #1).
25. PROVIDE THROUGH PENETRATION FIRESTOP SYSTEM AT ALL CONDUITS TO MATCH FIRE RATING OF GYPBOARD WALL. THE FIRESTOP SHALL BE UL SYSTEM NO. W-L-1085.
26. PROVIDE THROUGH PENETRATION FIRESTOP SYSTEM AT ALL CONDUITS PENETRATING THE FLOOR CONCRETE SLAB. THE FIRESTOP SHALL BE UL SYSTEM NO. C-AJ-1053.
27. PROVIDE THROUGH PENETRATION FIRESTOP SYSTEM AT ALL CABLE RUNS IN CABLE TRAYS TO MATCH FIRE RATING OF GYPBOARD WALLS. THE FIRE STOP SHALL BE UL SYSTEM NO. W-L-3218.
28. PROVIDE THROUGH PENETRATION FIRESTOP SYSTEM AT ALL CABLE RUNS IN CABLE TRAYS PENETRATING THE FLOOR CONCRETE SLAB. THE FIRESTOP SHALL BE UL SYSTEM NO. C-AJ-4069.
29. THE SEISMIC ANCHORAGE OF MECHANICAL AND ELECTRICAL EQUIPMENT SHALL CONFORM TO C.C.R. TITLE 24, 2001 CBC, SECTION 1632A AND TABLE 16A.0. ANCHORAGE DETAILS FOR ROOF FLOOR MOUNTED EQUIPMENT SHALL BE SHOWN ON PLANS. WHERE ANCHORAGE DETAILS ARE NOT SHOWN ON THE DRAWINGS, OR APPROVED DURING PLAN REVIEW, THE FIELD INSTALLATION SHALL BE SUBJECT TO THE APPROVAL OF THE CO PRIOR TO INSTALLATION AND INSPECTION BY THE COTR.
30. CUTTING, BORING, SAWCUTTING OR DRILLING THROUGH THE NEW OR EXISTING STRUCTURAL ELEMENTS TO BE DONE ONLY WHEN SO DETAIL IN THE DRAWINGS OR ACCEPTED IN WRITING BY THE STRUCTURAL ENGINEER OF RECORD WITH THE APPROVAL OF CO. ALL WELDING SHALL BE SPECIALLY INSPECTED BY AN AWS-CWI QUALIFIED INSPECTOR. ALL BRACING OF DUCTS AND PIPING SHALL BE INSTALLED IN ACCORDANCE WITH THE SMACNA GUIDELINES. WHEN BRACING DETAILS ARE NOT SHOWN ON THE DRAWINGS OR IN THE GUIDELINES, THE FIELD INSTALLATION SHALL BE SUBJECT TO THE APPROVAL OF THE ARCHITECT, MECHANICAL ENGINEER AND FIELD ENGINEER. A COPY OF THE GUIDELINES PUBLISHED BY SMACNA SHALL PROVIDED BY THE CONTRACTOR AND KEPT ON THE JOB AT ALL TIMES. SEISMIC BRACING AND RESTRAINTS MUST CONFORM TO SMACNA:

    SHL C – FOR 1ST FLOOR APPLICATIONS
    SHL A – FOR 2ND FLOOR APPLICATIONS
    SHL AA – FOR LOW ROOF APPLICATIONS
31. PROVIDE A MINIMUM 3" HIGH HOUSEKEEPING PAD FOR ALL EXTERIOR FLOOR MOUNTED SWITCHGEAR, DISTRIBUTION BOARDS, TRANSFORMERS, MOTOR CONTROL CENTERS ETC FLUSH WITH THE FACE OF THE EQUIPMENT. PROVIDE A MINIMUM 3" HIGH HOUSEKEEPING PAD FOR ALL INTERIOR FLOOR MOUNTED SWITCHGEAR, DISTRIBUTION BOARDS, TRANSFORMERS, MOTOR CONTROL CENTERS, TRANSFER SWITCHES ETC LOCATED IN CENTRAL PLANT FLUSH WITH THE FACE OF THE EQUIPMENT. CONFIRM PAD DIMENSIONS WITH LOCAL INSPECTOR PRIOR TO FORMING PAD TO ENSURE ANY LOCAL CODE INTERPRETATIONS OR CONDITIONS REGARDING HOUSEKEEPING PADS ARE MET.
32. PROVIDE TEMPORARY CONSTRUCTION POWER. ROUTE CONNECTION THROUGH COMMON UNDERGROUND DUCT TO CONSTRUCTION SITE UNDER ARNOLD AVE. A MAXIMUM OF 350 AMPERES OR 300KVA EQUIVALENT IS AVAILABLE TO THE CONTRACTOR DURING CONSTRUCTION OF N232. OBTAIN THE POWER AT MAIN ELECTRICAL PANEL MDP, WHICH IS LOCATED OUTDOOR OF THE CHILD CARE FACILITY, N270. THE CONTRACTOR IS TO INSTALL A 350 AMPERES, 480V 3 PHASE BOLTED ON TYPE CIRCUIT BREAKER WITH GROUND FAULT INTERRUPTER IN THE SPACE OF MDP. AFTER PROJECT IS DONE, CIRCUIT BREAKER TO REMAIN IN MDP AND MARKED AS SPARE FOR FUTURE USE. CONDUCTORS IN UNDERGROUND DUCT USED FOR TEMPORARY POWER ARE TO BE REMOVED AFTER CONSTRUCTION AND REMAINING CONDUIT TO BE MARKED "SPARE".

PROJECT STATUS

BID SET 04/27/09

ISSUE

MARK	DATE	DESCRIPTION	INITIAL

DRAWN	S. KANDA	DATE
DESIGNED	N. ZECH	DATE
CHECKED	D. KING	DATE
PROJMGR	J. GRANT	DATE
REQUESTOR	R. SCHULER	DATE
R&QA		DATE
SAFETY		DATE
SUPERVISOR	S FRANKEL	DATE

Ames Research Center
Moffet Field, California

N232 COLLABORATIVE SUPPORT FACILITY

ABBREVIATIONS AND GENERAL NOTES

SIZE	CAGE CODE		REV
D	25307	A232-0800- E002	

SCALE | INDEX | SHEET | OF

DWG: Q:\60048683 - NASA Ames CSF N232\500 CAD\E\Sheet\E002.dwg User: zechn
DATE: Apr 28, 2009 - 10:25:05 am Images:
Xrefs: "XBDR" "ArnoldAve-existing utilities"

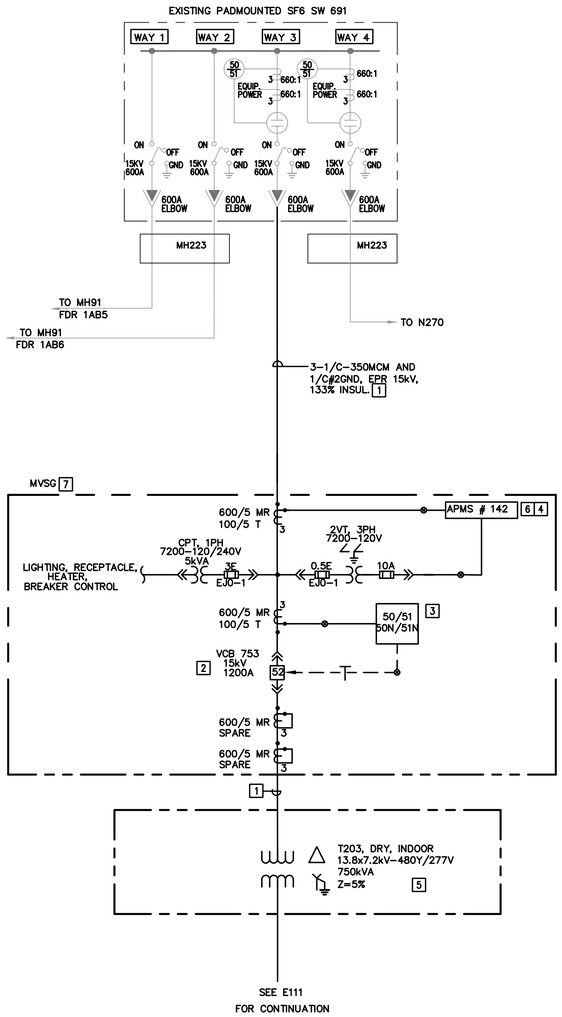

GENERAL NOTES:

1. FOR GENERAL CONSTRUCTION NOTES, ABBREVIATIONS AND SYMBOLS SEE DRAWING E001 & E002.
2. ALL INDOOR EQUIPMENT TO BE RATED FOR USE IN NEMA 1 ENVIRONMENT, MINIMUM.
3. ALL CT WIRES SHALL BE #10 AWG MINIMUM, TYPE SIS. ALL VOLTAGE, CPT SECONDARY AND BREAKER TRIP WIRES SHALL BE #12 AWG MINIMUM, TYPE SIS. U.O.N.
4. CPT AND VT'S SHALL BE DRAWOUT TYPE.
5. SEE SHEET E120 FOR FEEDER SCHEDULE.

PLAN NOTES:

1. PROVIDE 15kV, 3-1/C-350kCMIL, 133% INSULATION, EPR CABLE AND 1/C #2 GND FROM SW691 TO VCB753.
2. PROVIDE 15kV, 1200A VACUUM CIRCUIT BREAKER SWITCHGEAR VCB753 INCLUDING CPT, VT AND ALL ACCESSORIES PER SPECIFICATION SECTION 262816 AND 261116.
3. INSTALL GFE 3-PHASE MICROPROCESSOR BASED RELAY ALSTOM MICOM P124 COMPLETELY WIRED ON THE NEW SWITCHGEAR. SEE E911.
4. INSTALL NEW 3-PHASE DIGITAL POWER METER, PML ION 7330 COMPLETELY WIRED ON THE NEW SWITCHGEAR. INSTALLATION SHALL BE IN ACCORDANCE WITH DRAWING E909. THE METER SHALL BE FURNISHED AND INSTALLED BY THE CONTRACTOR. PROVIDE SCHNEIDER #P7330A0B0B0E0A0A. THE CONTRACTOR MAY NOT SUBSTITUTE ANY DIFFERENT METER. THE METER MUST BE COMPATIBLE WITH EXISTING APMS SYSTEM.
5. PROVIDE NEW 750kVA DUAL VOLTAGE DRY TYPE TRANSFORMER T203, INDOOR, ELECTROSTATIC SHIELDED, TOTALLY ENCLOSED, INCLUDING ALL ACCESSORIES PER SPECIFICATION SECTION 261116.
6. PROVIDE 2" CONDUIT WITH CAT 5E ETHERNET CABLE FROM APMS #142 IN MV SWITCHGEAR TO COMMUNICATION ROOM. INSTALL CONDUIT NOT MORE THEN 5 FEET FROM THE COMMUNICATION PANEL. PROVIDE ADDITIONAL 25 FEET OF CABLE AT EACH END AND COIL. ETHERNET CABLE HOOK UP TO COMMUNICATION PANEL AND APMS #142 WILL BE PERFORMED BY OTHERS.
7. SEE E910, E911, E912, E913 AND E914 FOR EQUIPMENT ELEVATION AND DETAILS.

ARCHITECT OF RECORD
DMJM H&N | AECOM
405 HOWARD STREET, SUITE 400
SAN FRANCISCO, CALIFORNIA 94105
T 415.365.3200 F 415.267.4957 www.dmjmhn.com

DESIGN ARCHITECTS
WILLIAM MCDONOUGH + PARTNERS
Architecture + Community Design
700 EAST JEFFERSON STREET
CHARLOTTESVILLE, VIRGINIA 22902
T 434.979.1111 F 434.979.1112 www.mcdonoughpartners.com

CONSULTANTS
CIVIL ENGINEER:
DMJM HARRIS
999 TOWN AND COUNTRY ROAD
ORANGE, CALIFORNIA 92868
T 714.567.2501 F 714.567.2777

LANDSCAPE ARCHITECT:
EDAW
2737 CAMPUS DRIVE
IRVINE, CA 92612
T 949.660.8044 F 949.660.1046

MECHANICAL, ELECTRICAL & PLUMBING ENGINEER:
DMJM H&N AECOM
999 TOWN AND COUNTRY ROAD
ORANGE, CALIFORNIA 92868
T 714.567.2752 F 714.567.2729

STRUCTURAL ENGINEER:
DMJM H&N AECOM
999 TOWN AND COUNTRY ROAD
ORANGE, CALIFORNIA 92868
T 714.567.2752 F 714.567.2729

LANDSCAPE CONSULTANT:
SITEWORKS STUDIO
826-C HINTON AVENUE
CHARLOTTESVILLE, VIRGINIA 22902

LIGHTING CONSULTANT:
LOISOS & UBBELOHDE
1917 CLEMENT AVENUE, BLDG 10A
ALAMEDA, CALIFORNIA 94501
T 510.521.3800 F 510.521.3820

ARCHITECT/ENGINEER STAMP

PROJECT STATUS

BID SET 04/27/09

ISSUE			
MARK	DATE	DESCRIPTION	INITIAL

DRAWN	S. KANDA	DATE
DESIGNED	N. ZECH	DATE
CHECKED	D. KING	DATE
PROJMGR	J GRANT	DATE
REQUESTOR	R SCHULER	DATE
R&QA		DATE
SAFETY		DATE
SUPERVISOR	S FRANKEL	DATE

Ames Research Center
Moffet Field, California

N232 COLLABORATIVE SUPPORT FACILITY
SUBSTATION
SINGLE LINE RELAY DIAGRAM

SIZE	CAGE CODE			REV
D	25307	A232-0800-	E110	
SCALE		INDEX	SHEET OF	

DWG: Q:\60048683 - NASA Ames CSF N232\300 CAD\E\Sheet\E110.dwg User: zechn
DATE: Apr 28, 2009 - 10:24:58 am Images:
Xrefs: 7683R

GENERAL NOTES:

1. SEE SHEET E001 AND E002 FOR SYMBOLS, ABBREVIATIONS AND GENERAL NOTES.
2. SEE SHEET E120 FOR FEEDER SCHEDULE.

PLAN NOTES:

1. PROVIDE SATCON OR APPROVED EQUAL 30KW INVERTER AT 3 PHASE, 480VAC OUTPUT WITH INTEGRAL GROUND-FAULT PROTECTION DEVICE, FUSED AC AND DC DISCONNECTS, AND OPTIONAL DC STRING COMBINER.
2. PROVIDE SPACE FOR 150A BREAKER FOR FUTURE INVERTER.
3. PROVIDE TRANSIENT VOLTAGE SURGE SUPPRESSION INTEGRAL WITH SWITCHBOARD AS PER SPEC SECTION 264313.
4. PHOTOVOLTAIC SYSTEM'S DISCONNECTING MEANS SHALL COMPLY WITH NEC 690 FOR WARNING LABELS INCLUDING WARNING LABEL TO READ "WARNING ELECTRICAL SHOCK HAZARD. DO NOT TOUCH TERMINALS ON BOTH THE LINE AND LOAD SIDES. MAY BE ENERGIZED IN OPEN POSITION." AND SHALL BE SERVICE RATED.
5. PROVIDE DRAWOUT MAIN BREAKER WITH DIGITRIP OR EQUIVALENT MICROPROCESSOR BASED PROTECTIVE RELAY WITH LSIG TRIP OPTIONS.
6. PROVIDE 2 1/2" CONDUIT TO ROOF FOR FUTURE INVERTER. CAP AND SEAL AT ABOVE ROOF. SEE E431 AND E432 FOR LOCATION OF INVERTERS..
7. PROVIDE BUSSMAN POWER MODULE SWITCH #PS6-T48-R1-K-G-A-F1 OR APPROVED EQUIVALENT.
8. SEE 6/E906 AND 1/E907 FOR GROUNDING DETAIL.
9. SOLID STATE MULIT-FUNCTION METER.
10. UNIT CONTROLLER AND DISCONNECT PROVIDED BY DIVISION 23.
11. PROVIDE POWER AND CONTROL WIRING FOR BRANCH CIRCUIT TO ADDRESSABLE BALLASTS AS SHOWN IN INSTALLATION GUIDE. SEE E915.
12. LIGHTING CONTROL HUB. PROVIDE 120V POWER CONNECTION FROM LIFE SAFETY INVERTER IN ELEC RM 114. SEE E905.
13. CONNECT EVERY 5 SOLAR MODULES IN SERIES WITH A TOTAL OF 9 PARALLEL CIRCUITS.
14. PROVIDE (9) 3/4"C WITH 2#6 AND 1#10G THWN-2, 90°C. PROVIDE CONNECTION TO DC STRINGER COMBINER OF INVERTER.
15. PROVIDE K-13 RATED TRANSFORMER.
16. PROVIDE (2) 4" CONDUIT CONCRETE INCASED DUCT BANK. PROVIDE (1) 4" CONDUIT WITH 4#500MCM CABLE AND 1#1 GROUND AND (1) 4" CONDUIT FOR SPARE. SEE KEYNOTE #4 ON E140.
17. PROVIDE (2) GROUND BUS BARS. (1) FOR ISOLATED GROUND BUS BAR AND (1) FOR EQUIPMENT GROUND BUS BAR. FOR ISOLATED GROUND BUS BAR DO NOT BOND CONNECTION TO NEUTRAL BUS BAR . PROVIDE CONNECTION FROM ISOLATED GROUND BUS BAR DIRECTLY TO COMMON GROUNDING POINT OF SEPARATELY DERIVED SOURCE.
18. SEE E112 FOR DISTRIBUTION PANELBOARD SINGLE LINE.
19. PROVIDE AS BID OPTION.
20. PROVIDE 3#10 AND 1#12 GROUND IN 1" PVC CONDUIT. SEE PLAN NOTE #17 ON E140.
21. CONTROLLER WITH INTEGRAL DISCONNECT PROVIDED BY SYSTEM INSTALLER.
22. PROVIDE 1" CONDUIT TO INVERTER FOR REMOTE COMMUNICATION. PROVIDE CONNECTION TO NEAREST COMMUNICATION ROOM.

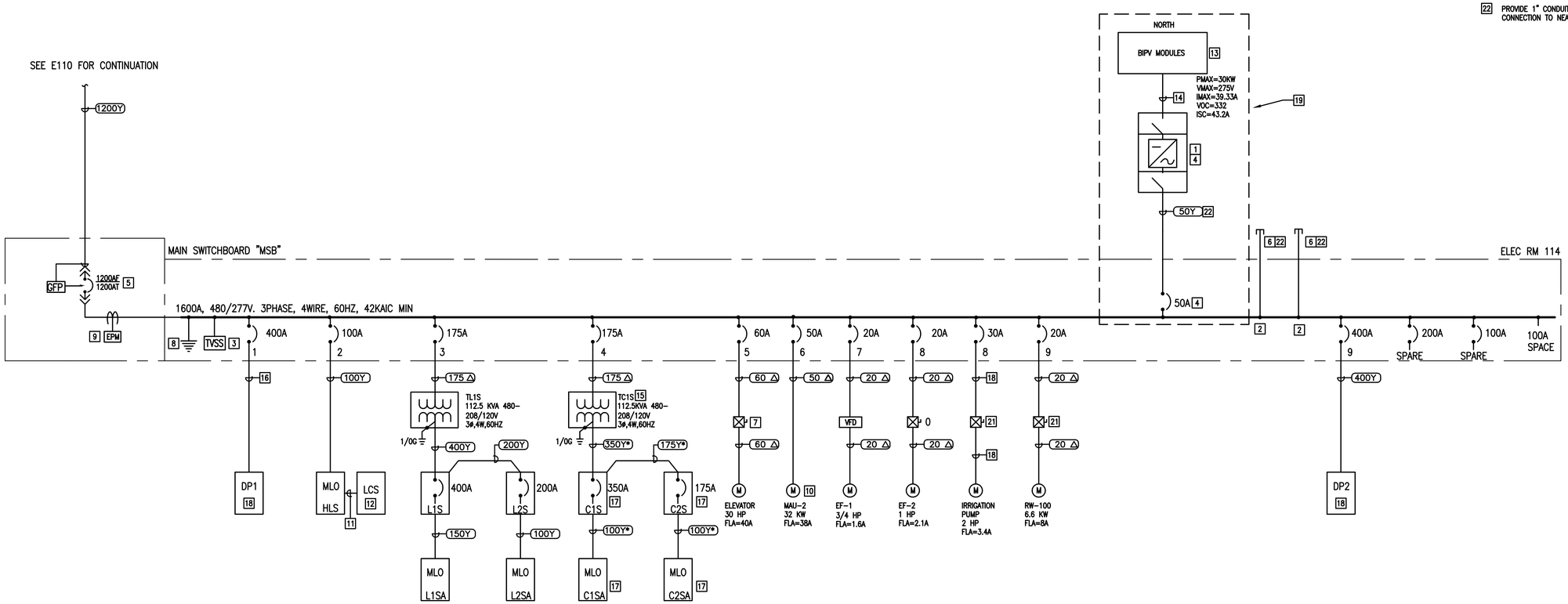

PROJECT STATUS	
BID SET 04/27/09	

ISSUE

MARK	DATE	DESCRIPTION	INITIAL

		DATE
DRAWN	S. KANDA	
DESIGNED	N. ZECH	
CHECKED	D. KING	
PRELIMGR	J. GRANT	
REVIEWER	R. SCHULER	
NIGA		
SAFETY		
SUPERVISOR	S FRANKEL	

Ames Research Center
Moffet Field, California

N232 COLLABORATIVE SUPPORT FACILITY

SINGLE LINE DIAGRAM

SIZE	CAGE CODE		REV
D	25307	A232-0800- E111	
SCALE		INDEX	SHEET OF

DWG: Q:\60048683 - NASA Ames CSF N232\500 CAD\E\Sheet\E111.dwg User: zechn
DATE: Apr 28, 2009 - 10:24:53 am Images:
Xrefs: "Arrosdwe-existing utilities" "ADBR-SHORT"

GENERAL NOTES:

1. SEE SHEET E001 AND E002 FOR SYMBOLS, ABBREVIATIONS AND GENERAL NOTES.
2. SEE SHEET E120 FOR FEEDER SCHEDULE.

PLAN NOTES:

1. UNIT CONTROLLER AND DISCONNECT PROVIDED BY DIVISION 23.
2. PROVIDE K-13 RATED TRANSFORMER.
3. LIGHTING CONTROL HUB. PROVIDE 120V POWER CONNECTION FROM LIFE SAFETY INVERTER IN ELEC RM 107. SEE E905.
4. PROVIDE POWER AND CONTROL WIRING FOR BRANCH CIRCUIT TO ADDRESSABLE BALLASTS AS SHOWN IN INSTALLATION GUIDE. SEE E915.
5. PROVIDE (2) GROUND BUS BARS. (1) FOR ISOLATED GROUND BUS BAR AND (1) FOR EQUIPMENT GROUND BUS BAR. FOR ISOLATED GROUND BUS BAR DO NOT BOND CONNECTION TO NEUTRAL BUS BAR . PROVIDE CONNECTION FROM ISOLATED GROUND BUS BAR DIRECTLY TO COMMON GROUNDING POINT OF SEPARATELY DERIVED SOURCE.
6. CONTROLLER PROVIDED BY DIVISION 23.

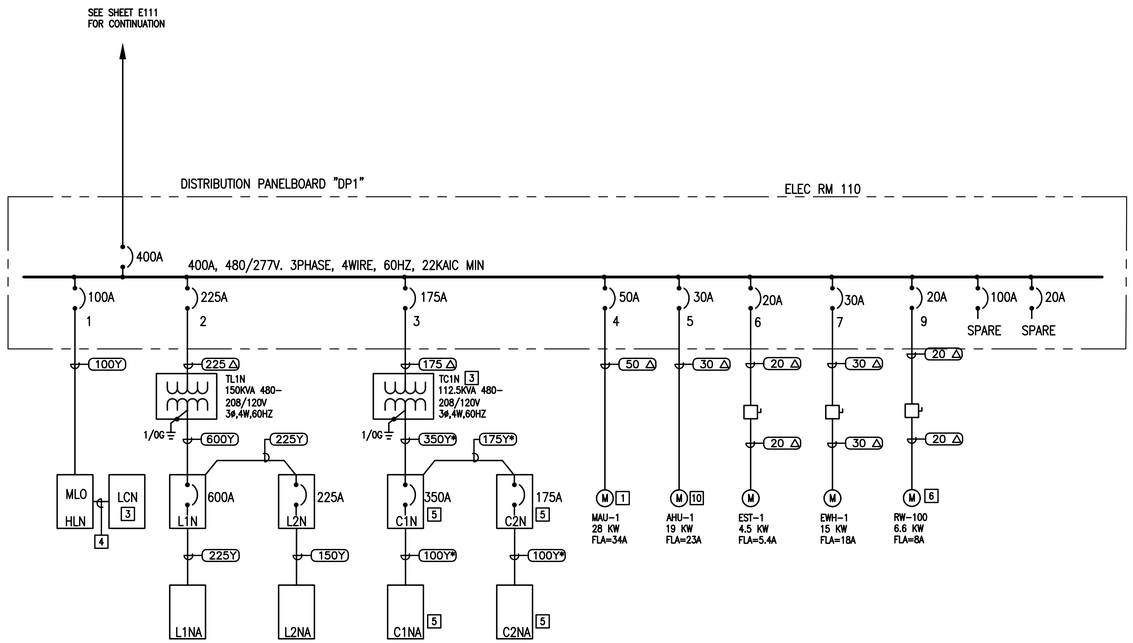

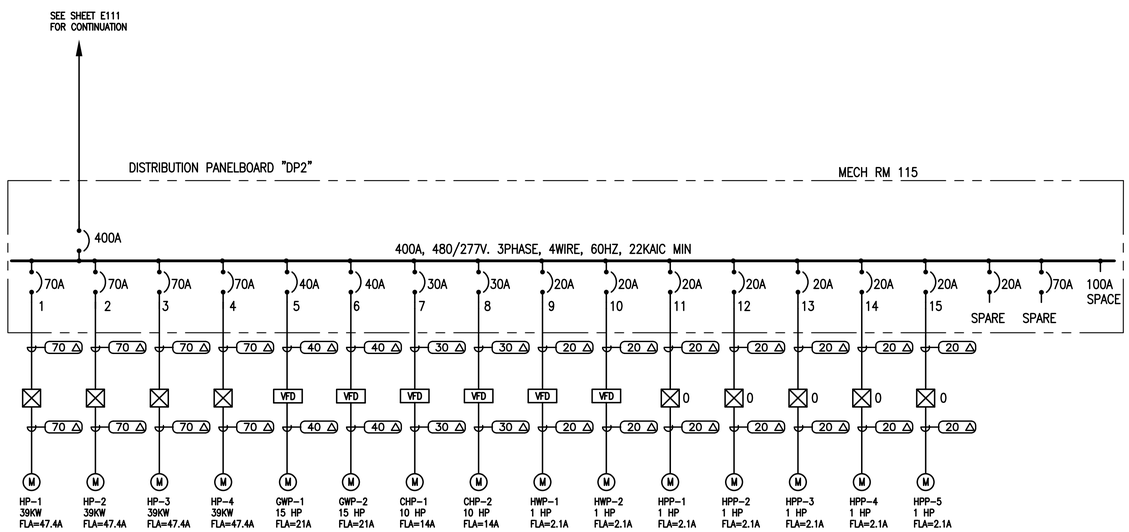

PROJECT STATUS

BID SET 04/27/09

ISSUE			
MARK	DATE	DESCRIPTION	INITIAL

DRAWN	S. KANDA	DATE
DESIGNED	N. ZECH	DATE
CHECKED	D. KING	DATE
PROJMGR	J. GRANT	DATE
REQUESTOR	R. SCHULER	DATE
RGA		DATE
SAFETY		DATE
SUPERVISOR	S FRANKEL	DATE

Ames Research Center
Moffet Field, California

N232 COLLABORATIVE SUPPORT FACILITY

SINGLE LINE DIAGRAM

SIZE	CAGE CODE		REV
D	25307	A232-0800- E112	
SCALE		INDEX	SHEET OF

DWG: G:\60048883 - NASA Ames CSF N232\300 CAD\E\Sheet\E112.dwg User: zechn
DATE: Apr 28, 2009 - 10:24:46 am Images:
Xrefs: AmesDwg-existing utilities* XBDR-SHORT

CONDUIT AND WIRE SCHEDULE

FEEDER NUMBER	PARALLEL FEEDER	WIRE QTY & SIZE	NEUTRAL SIZE	GROUND SIZE	CONDUIT SIZE
20 Δ	1	3#12		1#12	3/4"
30 Δ	1	3#10		1#10	3/4"
40 Δ	1	3#8		1#10	3/4"
50 Δ	1	3#6		1#10	3/4"
60 Δ	1	3#4		1#8	1"
70 Δ	1	3#4		1#8	1"
80 Δ	1	3#4		1#8	1 1/4"
150 Δ	1	3-1/0		1#6	1 1/2"
175 Δ	1	3-2/0		1#6	2"
400 Δ	1	3-500KCMIL		1#2	4"
500 Δ	1	3-500KCMIL		1#2	4"
25Y	1	3#12	3#12	1#10	3/4"
50Y	1	3#8	3#8	1#10	3/4"
70Y	1	3#4	1#4	1#8	1 1/4"
90Y	1	3#2	1#2	1#8	1 1/4"
100Y	1	3#1	1#1	1#8	1 1/2"
100Y*	1	3#1	2#1	1#8	2"
150Y	1	3#-1/0	1#-1/0	1#6	2"
175Y	1	3#-2/0	1#-2/0	1#6	2"
175Y*	1	3#-2/0	2#-2/0	1#6	2"
200Y	1	3#-4/0	1#-4/0	1#6	2 1/2"
225Y	1	3#-4/0	1#-4/0	1#6	2 1/2"
300Y	1	3-350KCMIL	1-350KCMIL	1#4	3"
300Y*	1	3-350KCMIL	2-350KCMIL	1#4	4"
350Y	1	3-500KCMIL	1-500KCMIL	1#2	4"
350Y*	1	3-500KCMIL	2-500KCMIL	1#2	4"
400Y	1	3-500KCMIL	1-500KCMIL	1#2	4"
600Y	2	3-350KCMIL	1-350KCMIL	1#4	3"
1200Y	4	3-350KCMIL	1-350KCMIL	1#-3/0	4"

GENERAL NOTES:

1. SEE SHEET E001 AND E002 FOR SYMBOLS, ABBREVIATIONS AND GENERAL NOTES.

PROJECT STATUS

BID SET 04/27/09

ISSUE			
MARK	DATE	DESCRIPTION	INITIAL

DRAWN	S. KANDA	DATE
DESIGNED	N. ZECH	DATE
CHECKED	D. KING	DATE
PROJMGR	J. GRANT	DATE
REQUESTOR	R. SCHULER	DATE
RSGA		DATE
SAFETY		DATE
SUPERVISOR	S FRANKEL	DATE

Ames Research Center
Moffet Field, California

N232 COLLABORATIVE SUPPORT FACILITY

FEEDER SCHEDULE

SIZE	CAGE CODE		REV
D	25307	A232-0800- E120	
SCALE		INDEX	SHEET OF

DWG: Q:\60046883 - NASA Ames CSF N232\500 CAD\E\Sheet\E120.dwg User: zechn
DATE: Apr 28, 2009 - 10:24:41 am Images:
Xrefs: *modxfer-existing utilities* *XBOR-SHORT*

LIGHTING FIXTURE SCHEDULE

TYPE	MANUFACTURER, OR APPROVED EQUAL	MODEL NUMBER	BALLAST	INPUT WATTAGE	VOLTAGE	LAMP	MOUNTING	MOUNTING HEIGHT	DESCRIPTION
A1	FINELITE X1-E (89% UP, 11% DOWN)	#SX1E-PS-X-2T5-SC-EP-OPEN-277-FA-EE LUTRON ECOSYSTEM-00-0/VX-X-5-48	ELECTRONIC	59	277	(2) 28-WATT T5 LINEAR FLUORESCENT.	PENDANT	FIRST FLOOR 9'-0" AFF SECOND FLOOR 8'-6" AFF	
A2	FINELITE X1-E (79% UP, 21% DOWN)	#SX1E-WCB-X-2T5-SC-EP-OPEN-277-FA-EE LUTRON ECOSYSTEM-00-0/VX-X-5-48	ELECTRONIC	59	277	(2) 28-WATT T5 LINEAR FLUORESCENT.	PENDANT	FIRST FLOOR 9'-0" AFF SECOND FLOOR 8'-6" AFF	
B1	ELLIPTIPAR OVALINEAR WALL WASH	#F140-T128-X-02 LUTRON ECOSYSTEM-00-0/VX-X-5-48	ELECTRONIC	33	277	(1) 28-WATT T5 LINEAR FLUORESCENT.	PENDANT	FIRST FLOOR 9'-0" AFF SECOND FLOOR 8'-6" AFF	
B3	OMEGA ASPECT5 WALL WASH	#OM241H24T5HOWW-CSS-D2-X LUTRON ECOSYSTEM-00-0/VX-X-5-48	ELECTRONIC	28	277	(1) 28-WATT T5HO LINEAR FLUORESCENT.	RECESSED	CEILING	
B4	LINEAR LIGHTING	#WW2-D-1-ET5-277-AL-R-BW-NO	ELECTRONIC	33	277	(1) 28-WATT T5 LINEAR FLUORESCENT.	PENDANT\ RECESSED	FIRST FLOOR 9'-0" AFF SECOND FLOOR RECESSED	
C1	ZUMTOBEL COPA D PENDANT	#CDTT-032-DH2-X-CPPND-CDSP LUTRON ECOSYSTEM-00-0/VX-X-5-48	ELECTRONIC	36	277	(1) 32-WATT TRIPLE TUBE COMPACT FLUORESCENT	PENDANT	FIRST FLOOR 21'-0" AFF	
D1	KIRLIN	#LRR-04022-39-MFL-31-30K LUTRON ECOSYSTEM-00-0/VX-X-5-48	LED DRIVER	20	277	LED	RECESSED	CEILING	
D2	LIGHTING SCIENCE	#RND-WW-CUSTOM-SGM-CUSTOM-DFF-NTL LUTRON ECOSYSTEM-00-0/VX-X-5-48	LED DRIVER	22	277	LED	WELL MOUNTED	SECOND FLOOR 2" ABOVE WELL	
D4	KURT VERSEN	#WP921	ELECTRONIC	32	277	(1) 32-WATT TRIPLE TUBE COMPACT FLUORESCENT	RECESSED	CEILING	
D6	KURT VERSEN	#R7525	ELECTRONIC	70	277	(1) 70-WATT METAL HALIDE	RECESSED	CEILING	
E2	COLOR KINETICS	#523-000027-19/277-000064-00/277-000065-00	LED DRIVER	10	277	LED	SURFACE	UNDER CABINET	
F1	LSI ECONOMY	F22-2-28-SS5R-277	ELECTRONIC	65	277	(2) 28-WATT T5 LINEAR FLUORESCENT.	PENDANT	FIRST FLOOR 9'-0" AFF SECOND FLOOR 9'-0" AFF	
H1	ERCO	MRC16 50W 12V GU5.3 36°	ELECTRONIC	55	277	(1) 50-WATT HALOGEN LAMP	SURFACE	FIRST FLOOR 9'-0" AFF SECOND FLOOR 8'-3" AFF	
J1	PHOENIX	VP-C-26CFL-277-GCL-G	ELECTRONIC	29	277	(1) 26-WATT COMPACT FLUORESCENT	SURFACE WALL MOUNT	2'-0" AFF OF ELEVATOR PIT	
K2	BRUCK VA TRACK	# BRUCK KROKO SPOT 160233MCGY ON TRACK (2) 160032MCGY	ELECTRONIC	29	277	(4) 35-WATT MR16	EDGE OF FLOOR ABOVE	CEILING	
X1	BEGHELLI	CYC-HT-LG-1-W-WCS	ELECTRONIC	5	277	LED	BACK MOUNT		
X2	BEGHELLI	CYC-HT-LG-1-W-WCS-PK	ELECTRONIC	5	277	LED	PENDANT MOUNT		
X2	BEGHELLI	CYC-HT-LG-1-W-ES	ELECTRONIC	5	277	LED	END MOUNT		

ARCHITECT OF RECORD

DMJM H&N | AECOM

405 HOWARD STREET, SUITE 400
SAN FRANCISCO, CALIFORNIA 94105
T 415.365.3200 F 415.267.4957 www.dmjmhn.com

DESIGN ARCHITECTS

WILLIAM MCDONOUGH + PARTNERS
Architecture + Community Design

700 EAST JEFFERSON STREET
CHARLOTTESVILLE, VIRGINIA 22902
T 434.979.1111 F 434.979.1112 www.mcdonoughpartners.com

CONSULTANTS

CIVIL ENGINEER:
DMJM HARRIS
999 TOWN AND COUNTRY ROAD
ORANGE, CALIFORNIA 92868
T 714.567.2501 F 714.567.2777

LANDSCAPE ARCHITECT:
EDAW
2737 CAMPUS DRIVE
IRVINE, CA 92612
T 949.660.8044 F 949.660.1046

MECHANICAL, ELECTRICAL & PLUMBING ENGINEER:
DMJM H&N AECOM
999 TOWN AND COUNTRY ROAD
ORANGE, CALIFORNIA 92868
T 714.567.2752 F 714.567.2729

STRUCTURAL ENGINEER:
DMJM H&N AECOM
999 TOWN AND COUNTRY ROAD
ORANGE, CALIFORNIA 92868
T 714.567.2752 F 714.567.2729

LANDSCAPE CONSULTANT:
SITEWORKS STUDIO
826-C HINTON AVENUE
CHARLOTTESVILLE, VIRGINIA 22902

LIGHTING CONSULTANT:
LOISOS & UBBELOHDE
1917 CLEMENT AVENUE, BLDG 10A
ALAMEDA, CALIFORNIA 94501
T 510.521.3800 F 510.521.3820

ARCHITECT/ENGINEER STAMP

PROJECT STATUS

BID SET 04/27/09

ISSUE			
MARK	DATE	DESCRIPTION	INITIAL

DRAWN	S. KANDA	DATE
DESIGNED	N. ZECH	DATE
CHECKED	D. KING	DATE
PROJMGR	J GRANT	DATE
REQUESTOR	R SCHULER	DATE
RAQA		DATE
SAFETY		DATE
SUPERVISOR	S FRANKEL	DATE

Ames Research Center
Moffet Field, California

N232 COLLABORATIVE SUPPORT FACILITY

LIGHT FIXTURE SCHEDULE

SIZE	CAGE CODE		REV
D	25307	A232-0800- E121	
SCALE		INDEX	SHEET OF

DWG: Q:\60046683 - NASA Ames CSF N232\500 CAD\E\Sheet\E121.dwg User: zechn
DATE: Apr 29, 2009 - 10:24:32 am Images:
Xrefs: "RBOR" "PwrxRef" -existing utilities

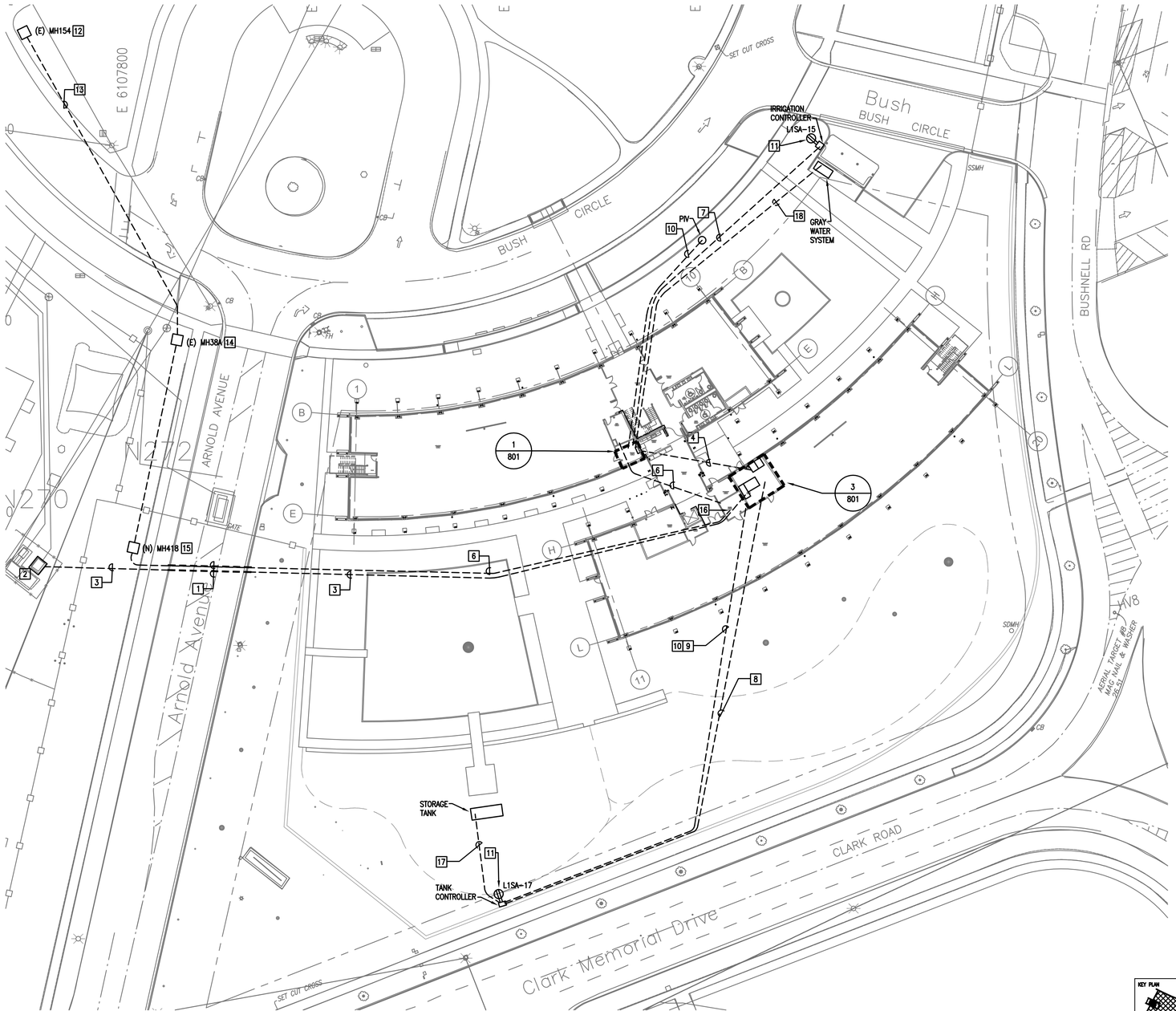

GENERAL NOTES:

1. SEE SHEET E001 AND E002 FOR SYMBOLS, ABBREVIATIONS AND GENERAL NOTES.
2. PROVIDE PULL WIRE IN SPARE CONDUITS.
3. EXISTING CONDUITS AND DUCT BANKS TO REMAIN UNLESS OTHERWISE NOTED.
4. COORDINATE NEW UTILITY WORK WITH ALL EXISTING UTILITY WORK.
5. PROTECT EXISTING ELECTRICAL AND COMMUNCATION CONDUITS DURING CONSTRUCTION.

PLAN NOTES:

1. PROVIDE JACKED RIGID STEEL CASING SLEEVES UNDER ACCESS ROAD FOR CONDUITS. SEE CIVIL PLAN DETAILS.
2. EXISTING SWITCH #691 MANHOLE 223.
3. PROVIDE (2) 4"CONDUIT CONCRETE INCASED DUCTBANK. (1) 4" CONDUIT CONTAINING 3-1/C #350MCM CABLE AT 15KV, EPR, AND 133% INSULATED AND (1) 4" CONDUIT FOR SPARE. SEE 3/E906.
4. PROVIDE (2) 4" CONDUIT CONCRETE INCASED DUCT BANK. PROVIDE (1) 4" CONDUIT WITH 4#500KCMIL CABLE AND 1#1 GROUND AND (1) 4" CONDUIT FOR SPARE. SEE 3/E906.
5. NOT USED.
6. PROVIDE (3) 4" CONDUIT CONCRETE INCASED DUCT BANK FOR COMMUNICATION. SEE 7/E906.
7. PROVIDE 1" PVC CONDUIT WITH 2#10 AND 1#10 GROUND FOR IRRIGATION CONTROL SYSTEM. CONNECT TO IRRIGATION SYSTEM AND PROVIDE POWER CONNECTION TO L1SA-15. DIRECT BURY MINIMUM OF 18" BELOW FINISHED GRADE. COORDINATE EXACT LOCATION WITH SYSTEM INSTALLER. SEE L501.
8. PROVIDE 1" PVC CONDUIT WITH FOR IRRIGATION TANK PUMP CONTROLLER. DIRECT BURY MINIMUM OF 18" BELOW FINISHED GRADE. STUB AT LOCATION OF PUMP CONTROLLER PAD. COORDINATE EXACT LOCATION WITH SYSTEM INSTALLER. SEE E111 AND L502.
9. PROVIDE 1" PVC CONDUIT WITH TELEPHONE CONNECTION FOR IRRIAGTION PUMP MONITORING. DIRECT BURY MINIMUM OF 18" BELOW FINISHED GRADE. STUB AT LOCATION OF PUMP CONTROLLER PANEL. COORDINATE EXACT LOCATION WITH SYSTEM INSTALLER AND TELECOMMUNCATIONS INSTALLER. PROVIDE CONDUIT CONNECTION TO ROOM 113.
10. PROVIDE 1" PVC CONDUIT FROM FIRE ALARM CONTROL PANEL TO POST INDICATOR VALVE. PROVIDE FLEXIBLE CONNECTION FROM ABOVE GRADE WEATHERPROOF J-BOX TO POST INDICATOR VALVE. COORDINATE WITH CIVIL ENGINEER DRAWINGS FOR LOCATION AND EXACT CONNECTION.
10. PROVIDE 1" PVC CONDUIT WITH 2#10 AND 1"12 GROUND FOR MAINTENANCE RECEPTACLE LOCATED ON POLE MOUNTED CONTROLLER.
11. PROVIDE GFI RECEPTACLE IN WEATHERPROOF ENCLOSURE. MOUNT ON POLE BELOW CONTROLLER.
12. EXISTING MH 154. CORE DRILL (6) 4" DIAMETER HOLES INTO MANHOLE WALL. COORDINATE HOLE LOCATIONS WITH THE CONTRACTING OFFICER.
13. PROVIDE (6) 4" CONDUITS, CONCRETE ENCASED DUCT BANK FOR COMMUNICATIONS.
14. REPLACE EXISTING 4'X4'X4' DEEP, MH 38A WITH A 3'-9"X 6'-9"X 3'-9" DEEP, PRECAST CONCRETE MANHOLE. CORE DRILL A TOTAL OF (12) 4" AND (4) 3" DIAMETER HOLES IN NEW MANHOLE. COORDINATE HOLE LOCATIONS WITH THE CONTRACTING OFFICER.
15. INSTALL A 3'-9" X 6'-9"X 3'-9" DEEP, PRECAST CONCRETE MANHOLE. CORE DRILL A TOTAL OF (8) 4" DIAMETER HOLES IN NEW MANHOLE. COORDINATE HOLE LOCATIONS WITH THE CONTRACTING OFFICER. NEW MANHOLE WILL BE MH 418.
16. INSTALL (2) 4" RISERS IN ROOM 113. EXACT LOCATION OF RISERS SHALL BE COORDINATED WITH THE CONTRACTING OFFICER.
17. PROVIDE 1" PVC CONDUIT FROM IRRIGATION TANK PUMP CONTROLLER TO STORAGE TANK FOR MOTOR CONNECTION. DIRECT BURY MINIMUM OF 18" BELOW FINISHED GRADE. CONNECT TO POLE MOUNTED CONTROLLER. COORDINATE EXACT LOCATION WITH SYSTEM INSTALLER. SEE E111 FOR SIZE OF CONDUCTORS AND L502 FOR SYSTEM DETAIL. CONNECTIONS FOR OTHER CONTROLS TO BE PROVIDED BY SYSTEM INSTALLER.
18. PROVIDE 1" PVC CONDUIT FOR GRAY WATER SYSTEM. DIRECT BURY MINIMUM OF 18" BELOW FINISHED GRADE. CONNECT TO PANEL L1NA CIRCUIT #37,39,41. COORDINATE EXACT LOCATION WITH SYSTEM INSTALLER.

ARCHITECT OF RECORD

DMJM H&N | AECOM

405 HOWARD STREET, SUITE 400
SAN FRANCISCO, CALIFORNIA 94105
T 415.365.3200 F 415.267.4957 www.dmjmhn.com

DESIGN ARCHITECTS

WILLIAM MCDONOUGH + PARTNERS
Architecture + Community Design

700 EAST JEFFERSON STREET
CHARLOTTESVILLE, VIRGINIA 22902
T 434.979.1111 F 434.979.1112 www.mcdonoughpartners.com

CONSULTANTS

CIVIL ENGINEER:
DMJM HARRIS
999 TOWN AND COUNTRY ROAD
ORANGE, CALIFORNIA 92868
T 714.567.2501 F 714.567.2777

LANDSCAPE ARCHITECT:
EDAW
2737 CAMPUS DRIVE
IRVINE, CA 92612
T 949.660.8044 F 949.660.1046

MECHANICAL, ELECTRICAL & PLUMBING ENGINEER:
DMJM H&N AECOM
999 TOWN AND COUNTRY ROAD
ORANGE, CALIFORNIA 92868
T 714.567.2752 F 714.567.2729

STRUCTURAL ENGINEER:
DMJM H&N AECOM
999 TOWN AND COUNTRY ROAD
ORANGE, CALIFORNIA 92868
T 714.567.2752 F 714.567.2729

LANDSCAPE CONSULTANT:
SITEWORKS STUDIO
826-C HINTON AVENUE
CHARLOTTESVILLE, VIRGINIA 22902

LIGHTING CONSULTANT:
LOISOS & UBBELOHDE
1917 CLEMENT AVENUE, BLDG 10A
ALAMEDA, CALIFORNIA 94501
T 510.521.3800 F 510.521.3820

ARCHITECT/ENGINEER STAMP

PROJECT STATUS

BID SET 04/27/09

ISSUE			
MARK	DATE	DESCRIPTION	INITIAL

KEY PLAN

NORTH ARROW

BLDG NORT

TRUE NORTH

1"=30'-0" 0 15 30 60 90

DRAWN	S. KANDA	DATE
DESIGNED	N. ZECH	DATE
CHECKED	D. KING	DATE
PROJMGR	J GRANT	DATE
REQUESTOR	R SCHULER	DATE
R&QA		DATE
SAFETY		DATE
SUPERVISOR	S FRANKEL	DATE

Ames Research Center
Moffet Field, California

N232 COLLABORATIVE SUPPORT FACILITY

ELECTRICAL POWER AND COMMUNICATIONS SITE PLAN

SIZE	CAGE CODE		REV
D	25307	A232-0800- E140	
SCALE		INDEX	SHEET OF

DWG: Q:\00046883 - NASA Ames CSF N232\500 CAD\E\Sheet\E140.dwg User: zechn
DATE: Apr 09, 2009 - 10:28:52 am Images:
Xrefs: RDOR "xCopo1" "xCsite01" "xCbuild01" "xmoldAve-existing utilities" "xAFP01"

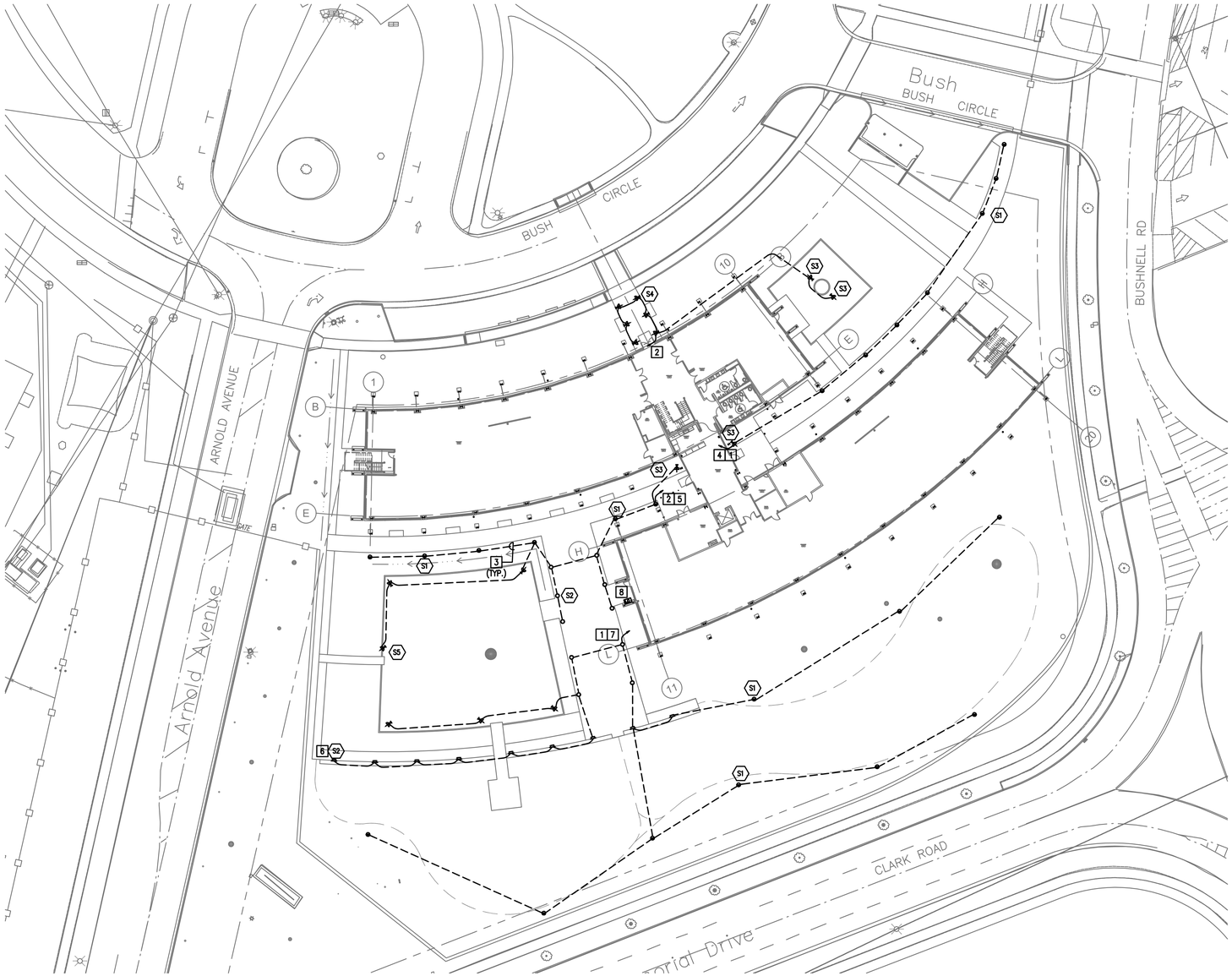

GENERAL NOTES:

1. SEE SHEET E001 AND E002 FOR SYMBOLS, ABBREVIATIONS AND GENERAL NOTES.

PLAN NOTES:

1. PROVIDE CONNECTION TO LIFE SAFETY INVERTER IN ELECTRICAL ROOM 114
2. PROVIDE CONNECTION TO LIFE SAFETY INVERTER IN ELECTRICAL ROOM 107
3. PROVIDE 1" CONDUIT WITH 2#10 AND 1#12G.
4. PROVIDE CONNECTION TO LCS AND PROGRAM TO BE ON ASTRONOMICAL CLOCK.
5. PROVIDE CONNECTION TO LCN AND PROGRAM TO BE ON ASTRONOMICAL CLOCK.
6. SEE LANDSCAPE DRAWINGS FOR RETAINER WALL DETAIL.
7. LIGHTS TO BE CONTROLLED BY SWITCH LOCATED AT SOUTH WING WEST ENTRANCE. SEE KEYNOTE #8.
8. PROVIDE LIGHT SWITCH TO CONTROL SOUTH END LIGHTS. SEE KEYNOTE #7. PROVIDE CONNECTION TO LIGHTING CONTROL SYSTEM.

SITE LIGHTING FIXTURE SCHEDULE

TYPE	MANUFACTURER, OR APPROVED EQUAL	MODEL NUMBER	BALLAST	INPUT WATTAGE	VOLTAGE	LAMP	MOUNTING	MOUNTING HEIGHT	NOTES
S1	ERCO MIDIPOLI BOLLARD	3333.023	LED DRIVER	10	120	LED	MOUNTED IN GROUND	GROUND LEVEL	SEE 2/E908 PROVIDE ACCESSORIES AND CONTROL MODULES AS NECESSARY
S2	ERCO FLOOR WASHLIGHT	33768.023	LED DRIVER	0.5	120	LED	RECESSED IN RETAINER WALL	12" AFF IN RETAINER WALL	
S3	ERCO GRASSHOPPER PROJECTOR	34021.023	LED DRIVER	14	120	LED	MOUNTED IN GROUND	GROUND LEVEL	
S4	ERCO GRASSHOPPER PROJECTOR	34022.023	ELECTRONIC	20	120	LED	MOUNTED IN GROUND	GROUND LEVEL	
S5	ERCO GRASSHOPPER PROJECTOR	34022.023	ELECTRONIC	20	120	LED	MOUNTED IN GROUND	GROUND LEVEL	PROVIDE SPHEROLIT REFLECTOR, SPOT

NOTES:
PROVIDE ACCESSORIES AND CONTROL MODULES AS NECESSARY FOR LIGHT FIXTURES.

ARCHITECT OF RECORD
DMJM H&N | AECOM
405 HOWARD STREET, SUITE 400
SAN FRANCISCO, CALIFORNIA 94105
T 415.365.3200 F 415.267.4957 www.dmjmhn.com

DESIGN ARCHITECTS
WILLIAM MCDONOUGH + PARTNERS
Architecture + Community Design
700 EAST JEFFERSON STREET
CHARLOTTESVILLE, VIRGINIA 22902
T 434.979.1111 F 434.979.1112 www.mcdonoughpartners.com

CONSULTANTS
CIVIL ENGINEER:
DMJM HARRIS
999 TOWN AND COUNTRY ROAD
ORANGE, CALIFORNIA 92868
T 714.567.2501 F 714.567.2777

LANDSCAPE ARCHITECT:
EDAW
2737 CAMPUS DRIVE
IRVINE, CA 92612
T 949.660.8044 F 949.660.1046

MECHANICAL, ELECTRICAL & PLUMBING ENGINEER:
DMJM H&N AECOM
999 TOWN AND COUNTRY ROAD
ORANGE, CALIFORNIA 92868
T 714.567.2752 F 714.567.2729

STRUCTURAL ENGINEER:
DMJM H&N AECOM
999 TOWN AND COUNTRY ROAD
ORANGE, CALIFORNIA 92868
T 714.567.2752 F 714.567.2729

LANDSCAPE CONSULTANT:
SITEWORKS STUDIO
826-C HINTON AVENUE
CHARLOTTESVILLE, VIRGINIA 22902

LIGHTING CONSULTANT:
LOISOS & UBBELOHDE
1917 CLEMENT AVENUE, BLDG 10A
ALAMEDA, CALIFORNIA 94501
T 510.521.3800 F 510.521.3820

ARCHITECT/ENGINEER STAMP

PROJECT STATUS
BID SET 04/27/09

ISSUE	MARK	DATE	DESCRIPTION	INITIAL

KEY PLAN

NORTH ARROW
BLDG NORT
TRUE NORTH

1"=30'-0" 0 15 30 60 90

		DATE
DRAWN	S. KANDA	
DESIGNED	N. ZECH	
CHECKED	D. KING	
PROJ.MGR	J GRANT	
REQUESTOR	R SCHULER	
R&QA		
SAFETY		
SUPERVISOR	S FRANKEL	

Ames Research Center
Moffet Field, California

N232 COLLABORATIVE SUPPORT FACILITY
ELECTRICAL
LIGHTING
SITE PLAN

SIZE	CAGE CODE		REV
D	25307	A232-0800- E141	
SCALE		INDEX	SHEET OF

DWG: Q:\60048683 - NASA Ames CSF N232\500 CAD\E\Sheet\E141.dwg User: zechn
DATE: Apr 28, 2009 - 10:24:08 am Image= "xCbuild01" "xCbuild01" "xCopo1" "xCsite01" "Arnoldave-existing utilities" "xAF901"
Xrefs: "RDIR" "xCopo1" "xCsite01" "xCbuild01" "Arnoldave-existing utilities" "xAF901"

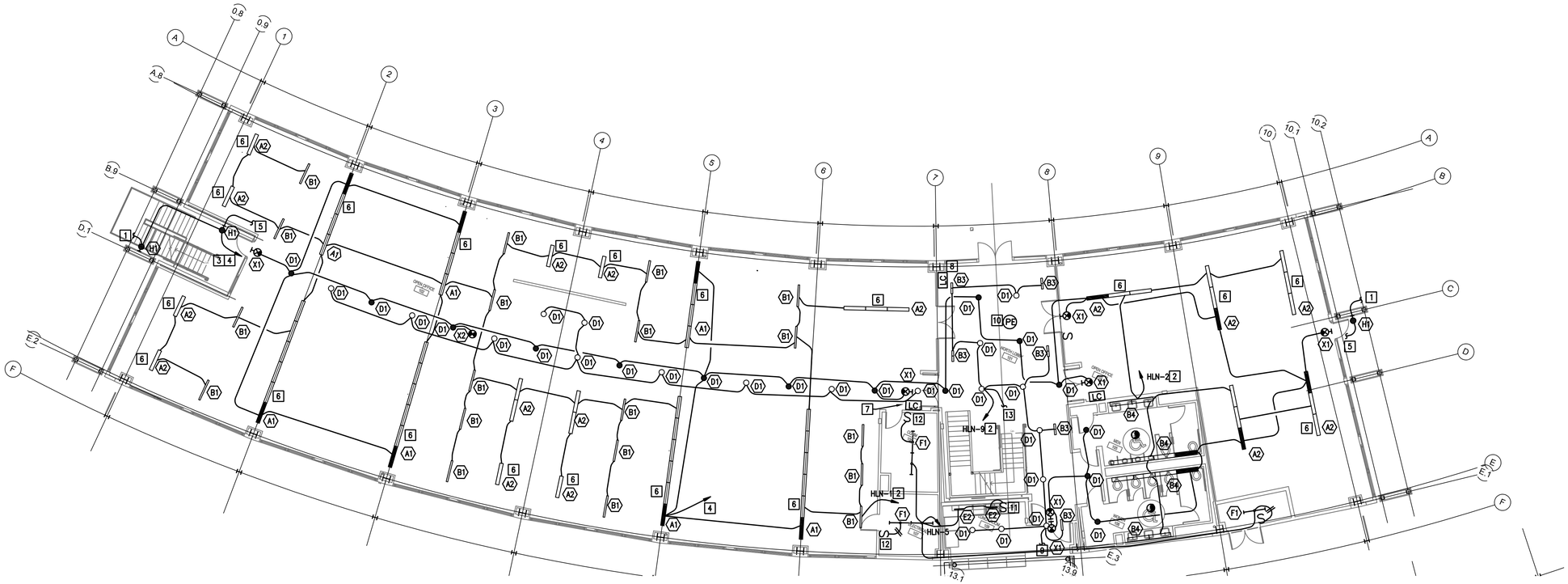

GENERAL NOTES:

1. SEE SHEET E001 AND E002 FOR SYMBOLS, ABBREVIATIONS AND GENERAL NOTES.
2. SEE SHEET E905 FOR LIGHTING CONTROL DIAGRAM.

PLAN NOTES:

1. PROVIDE CONNECTION TO H1 FIXTURES THAT ARE LOCATED ON SECOND LEVEL.
2. PROVIDE CONTROL CIRCUIT CONNECTION TO LCN. SEE E905.
3. PROVIDE CONTROL CIRCUIT CONNECTION TO LUTRON #CGXPJ-16A SWITCHING POWER MODULE. SEE E905.
4. PROVIDE CONNECTION TO LIFE SAFETY INVERTER IN ELECTRICAL ROOM 107.
5. PROVIDE CONNECTION TO STAIRWELL LIGHTING CIRCUIT.
6. PROVIDE INTEGRAL DAYLIGHT SENSOR IN FIXTURE. AFTER INSTALL PROVIDE ADJUSTMENT ON EACH INDIVIDUAL FIXTURE BASED ON DISTANCE FROM WINDOW AND DESIRED LIGHT LEVEL.
7. PROVIDE LUTRON #CC-1BRL-WH TO CONTROL CENTRAL AISLE LIGHTING AND OPEN OFFICE LIGHTING FOR AFTER HOURS. ONCE TENNANT IMPROVEMENT IS IMPLEMENTED, ADDITIONAL CONTROLS CAN BE INSTALLED TO TURN ON DESIGNATED AREAS.
8. PROVIDE LUTRON #CC-4BRL-WH TO CONTROL LOBBY LIGHTING FOR AFTER HOURS. PRESET CONTROL SCENES WILL BE SET TO CONTROL VARIOUS LIGHTS ON BOTH LOBBY LEVELS.
9. SEE E312 FOR CONTINUATION OF CIRCUIT.
10. PROVIDE DAYLIGHT SENSOR IN CEILING FOR LIGHT FIXUTRES IN LOBBY.
11. PROVIDE TIMER SWITCH AND MOUNT ABOVE COUNTER. COMBINE WITH SWITCH FOR GARBAGE DISPOSAL. SEE E411.
12. PROVIDE TIMER SWITCH. SET TO MAXIMUM TIME.
13. TO SECOND LEVEL LOBBY LIGHTS.

LIGHTING CONTROL SCHEDULE:

a. EXTERIOR STAIRS:
QUANTUM TIMECLOCK TURNS LIGHTS ON AT DESIGNATED TIME AFTER HOURS AND OFF AT DESIGNATED TIME IN MORNING WITH SUFFICIENT DAYLIGHT.

b. CENTRAL AISLE DOWNLIGHTS:
QUANTUM TIMECLOCK TURNS LIGHTS ON AT DESIGNATED TIME AT START OPERATING HOURS AND TURNS LIGHTS OFF (EXCEPT EMERGENCY LIGHTS) AT DESIGNATED TIME AFTER HOURS. MANUAL OVERRIDE PROVIDED. SEE KEYNOTE #7.

c. OPEN OFFICE AREA:
QUANTUM TIMECLOCK TURNS LIGHTS ON AT DESIGNATED TIME AT START OPERATING HOURS AND TURNS LIGHTS OFF (EXCEPT EMERGENCY LIGHTS) AT DESIGNATED TIME AFTER HOURS.

LIGHTS MANUALLY TURNED WILL HAVE QUANTUM TIMECLOCK FLASH LIGHTS TO WARN LIGHTS WILL BE TURNED OFF AT DESIGNATED TIME AFTER HOURS. UPON MANUAL OVERRIDE LIGHTS WILL REMAIN ON FOR A DESIGNATED TIME.

ONCE TENANT IMPROVEMENT IS IMPLEMENTED CONTROL CAN BE CHANGED TO DESIRED APPLICATION FOR INDIVIDUAL AREAS (EXAMPLE: INDIVIDUAL OFFICES, CONFERENCE ROOMS).

DAYLIGHT SENSORS TO PROVIDE DAYLIGHT DIMMING TO 10%

d. LOBBY:
QUANTUM TIMECLOCK TURNS LIGHTS ON AT DESIGNATED TIME AT START OPERATING HOURS AND TURNS LIGHTS OFF (EXCEPT EMERGENCY LIGHTS) AT DESIGNATED TIME AFTER HOURS.

DAYLIGHT SENSORS TO PROVIDE DAYLIGHT DIMMING TO 10%

e. RESTROOM:
MANUAL ON/ AUTO OFF WITH CEILING MOUNTED DUAL-TECH OCCUPANCY SENSOR.

f. CONFERENCE FACILITY:
LUTRON GRAFIK QS WILL CONTROL ALL FIXTURES WITH PROGRAMMING SCENES. MAIN PANEL FOR GRAFIK EYE LOCATED IN CLOSET IN FRONT OF ROOM. EACH OF THREE SUBSPACES TO HAVE OWN GRAFIK EYE AUXILLARY SWITCH. TO BE FITTED OUT DURING TENNANT IMPROVEMENT.

DAYLIGHT SENSORS TO PROVIDE DAYLIGHT DIMMING TO 10%

DUAL-TECH OCCUPANCY SENSORS TO SHUT OFF LIGHTS WHEN NOT OCCUPPIED.

KEY PLAN

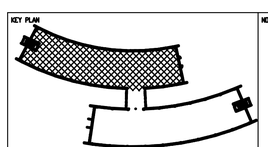

NORTH ARROW

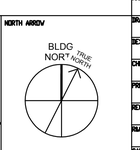

3/32"=1' 0 8 16 32 48

PROJECT STATUS

BID SET 04/27/09

ISSUE			
MARK	DATE	DESCRIPTION	INITIAL

		DATE
DRAWN	S. KANDA	
DESIGNED	L-U	
CHECKED	D. KING	
PRELIMER	J. GRANT	
REQUESTOR	R. SCHULER	
RGA		
SAFETY		
SUPERVISOR	S FRANKEL	

Ames Research Center
Moffet Field, California

N232 COLLABORATIVE SUPPORT FACILITY

FIRST FLOOR LIGHTING PLAN NORTH WING

SIZE	CAGE CODE		REV
D	25307	A232-0800- E311	
SCALE		INDEX SHEET OF	

DWG: Q:\60046883 - NASA Ames CSF N232\500 CAD\E\Sheet\E311.dwg User: zechn
DATE: Apr 28, 2009 - 10:23:59 am Images:
Xrefs: "XAFF01" "R28R-SHORT" "KELT001" "XAFP01-SPACE PLAN" "N232_S09_CENTRAL_rvt-1-Level 1 Export- Space Plan" "elec_light_flr01" "FIRST-FLOOR-PLAN" "xgrid

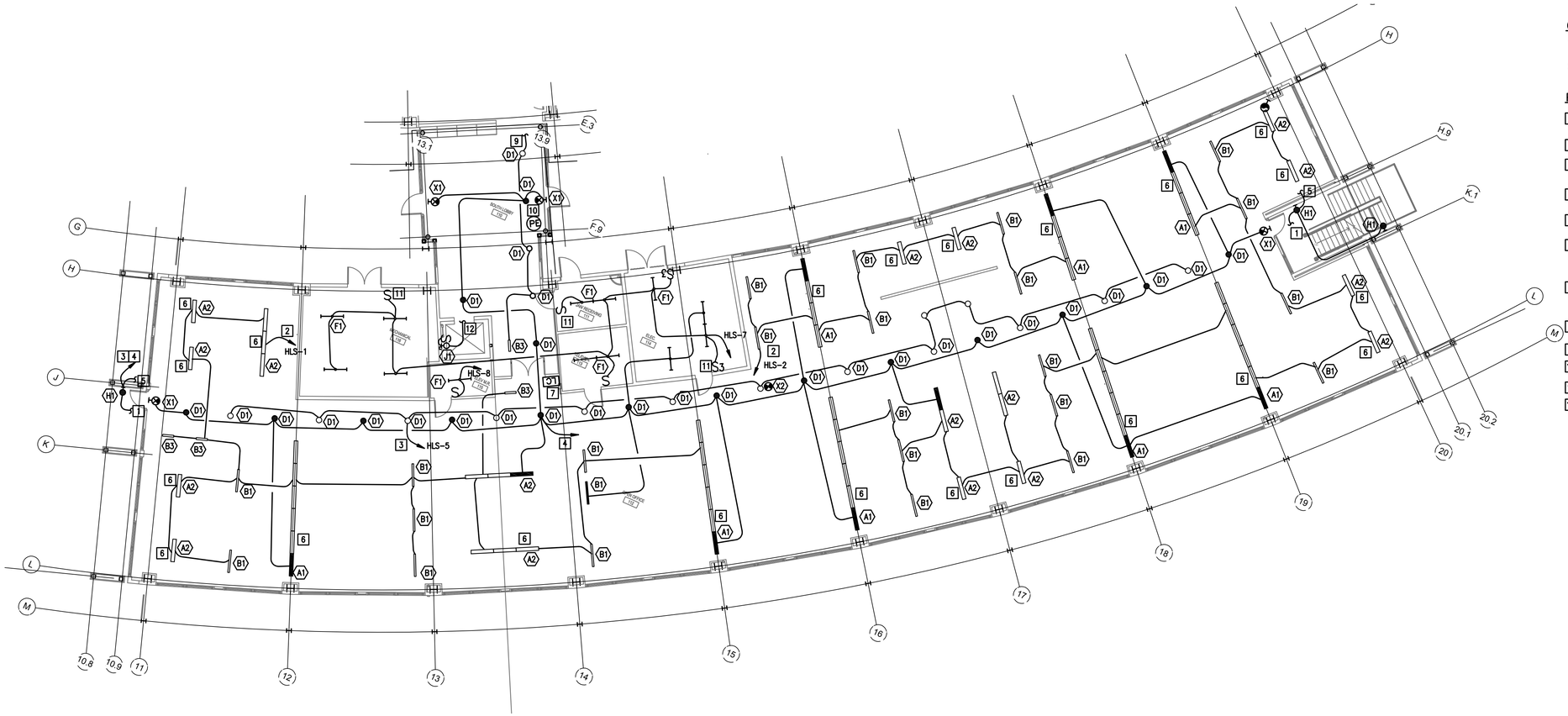

GENERAL NOTES:

1. SEE SHEET E001 AND E002 FOR SYMBOLS, ABBREVIATIONS AND GENERAL NOTES.
2. SEE SHEET E905 FOR LIGHTING CONTROL DIAGRAM.

PLAN NOTES:

1. PROVIDE CONNECTION TO H1 FIXTURES THAT ARE LOCATED ON SECOND LEVEL.
2. PROVIDE CONTROL CIRCUIT CONNECTION TO LCS. SEE E905.
3. PROVIDE CONTROL CIRCUIT CONNECTION TO LUTRON #CGXPJ-16A SWITCHING POWER MODULE. SEE E905.
4. PROVIDE CONNECTION TO LIFE SAFETY INVERTER IN ELECTRICAL ROOM 114
5. PROVIDE CONNECTION TO STAIRWELL LIGHTING CIRCUIT.
6. PROVIDE INTEGRAL DAYLIGHT SENSOR IN FIXTURE. AFTER INSTALL PROVIDE ADJUSTMENT ON EACH INDIVIDUAL FIXTURE BASED ON DISTANCE FROM WINDOW AND DESIRED LIGHT LEVEL.
7. PROVIDE LUTRON #CC-1BRL-WH TO CONTROL CENTRAL AISLE LIGHTING AND OPEN OFFICE LIGHTING. ONCE TENNANT IMPROVEMENT IS IMPLEMENTED, ADDITIONAL CONTROLS CAN BE INSTALLED TO TURN ON DESIGNATED AREAS.
8. PROVIDE LUTRON #CC-4BRL-WH TO CONTROL LOBBY LIGHTING.
9. SEE E311 FOR CONTINUATION OF CIRCUIT.
10. PROVIDE DAYLIGHT SENSOR IN CEILING FOR LIGHT FIXUTRES IN LOBBY.
11. PROVIDE TIMER SWITCH. SET TO MAXIMUM TIME.
12. PROVIDE CONNECTION TO L1S-35. SEE E412.

LIGHTING CONTROL SCHEDULE:

a. EXTERIOR STAIRS:
QUANTUM TIMECLOCK TURNS LIGHTS ON AT DESIGNATED TIME AFTER HOURS AND OFF AT DESIGNATED TIME IN MORNING WITH SUFFICIENT DAYLIGHT.

b. CENTRAL AISLE DOWNLIGHTS:
QUANTUM TIMECLOCK TURNS LIGHTS ON AT DESIGNATED TIME AT START OPERATING HOURS AND TURNS LIGHTS OFF (EXCEPT EMERGENCY LIGHTS) AT DESIGNATED TIME AFTER HOURS. MANUAL OVERRIDE PROVIDED. SEE KEYNOTE #7.

c. OPEN OFFICE AREA:
QUANTUM TIMECLOCK TURNS LIGHTS ON AT DESIGNATED TIME AT START OPERATING HOURS AND TURNS LIGHTS OFF (EXCEPT EMERGENCY LIGHTS) AT DESIGNATED TIME AFTER HOURS.

LIGHTS MANUALLY TURNED WILL HAVE QUANTUM TIMECLOCK FLASH LIGHTS TO WARN LIGHTS WILL BE TURNED OFF AT DESIGNATED TIME AFTER HOURS. UPON MANUAL OVERRIDE LIGHTS WILL REMAIN ON FOR A DESIGNATED TIME.

ONCE TENANT IMPROVEMENT IS IMPLEMENTED CONTROL CAN BE CHANGED TO DESIRED APPLICATION FOR INDIVIDUAL AREAS (EXAMPLE: INDIVIDUAL OFFICES, CONFERENCE ROOMS).

DAYLIGHT SENSORS TO PROVIDE DAYLIGHT DIMMING TO 10%

d. LOBBY:
QUANTUM TIMECLOCK TURNS LIGHTS ON AT DESIGNATED TIME AT START OPERATING HOURS AND TURNS LIGHTS OFF (EXCEPT EMERGENCY LIGHTS) AT DESIGNATED TIME AFTER HOURS.

DAYLIGHT SENSORS TO PROVIDE DAYLIGHT DIMMING TO 10%

KEY PLAN

NORTH ARROW: BLDG NORTH, TRUE NORTH

3/32"=1' (0 8 16 32 48)

PROJECT STATUS: BID SET 04/27/09

ISSUE			
MARK	DATE	DESCRIPTION	INITIAL

		DATE
DRAWN	S. KANDA	
DESIGNED	L + U	
CHECKED	D. KING	
PRELIMINER	J. GRANT	
REVIEWER	R. SCHULER	
FILGA		
SAFETY		
SUPERVISOR	S FRANKEL	

Ames Research Center
Moffet Field, California

N232 COLLABORATIVE SUPPORT FACILITY
FIRST FLOOR
LIGHTING PLAN
SOUTH WING

SIZE	CAGE CODE		REV
D	25307	A232-0800- E312	
SCALE		INDEX	SHEET OF

DWG: G:\60048663 - NASA Ames CSF N232\500 CAD\E\Sheet\E312.dwg User: zechin
DATE: Apr 28, 2009 - 10:23:53 am Images:
Xrefs: "xAFP01" "xARC01" "XBDR-SHORT" "xLTG01" "xAFP01-SPACE PLAN" "N232_S09_CENTRAL_rvt-1-Level 1 Export- Space Plan" "xgrid

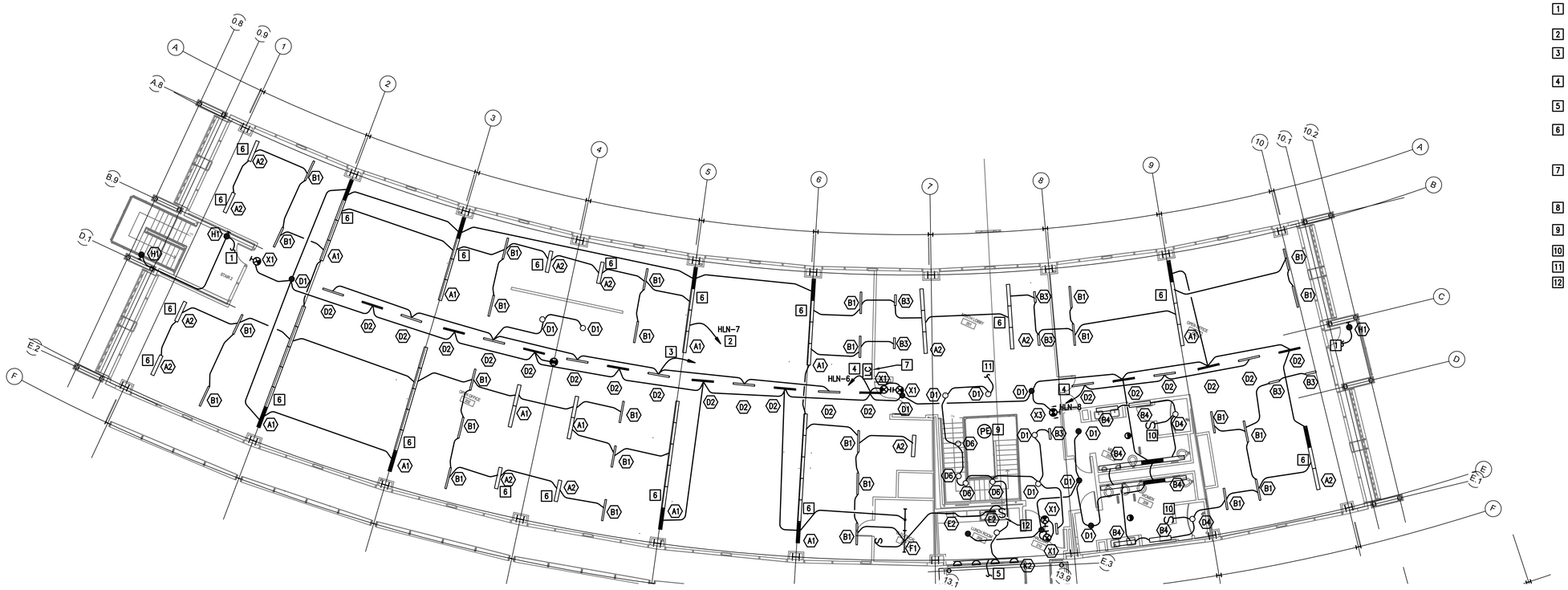

GENERAL NOTES:

1. SEE SHEET E001 AND E002 FOR SYMBOLS, ABBREVIATIONS AND GENERAL NOTES.
2. SEE SHEET E905 FOR LIGHTING CONTROL DIAGRAM.

PLAN NOTES:

1. PROVIDE CONNECTION TO H1 FIXTURES THAT ARE LOCATED ON FIRST LEVEL.
2. PROVIDE CONTROL CIRCUIT CONNECTION TO LCN. SEE E905.
3. PROVIDE CONTROL CIRCUIT CONNECTION TO LUTRON #CGXPJ-16A SWITCHING POWER MODULE. SEE E915
4. PROVIDE CONNECTION TO LIFE SAFETY INVERTER IN ELECTRICAL ROOM 107.
5. SEE E322 FOR CONTINUATION OF CIRCUIT.
6. PROVIDE INTEGRAL DAYLIGHT SENSOR IN FIXTURE. AFTER INSTALL PROVIDE ADJUSTMENT ON EACH INDIVIDUAL FIXTURE BASED ON DISTANCE FROM WINDOW AND DESIRED LIGHT LEVEL.
7. PROVIDE LUTRON #CC-1BRL-WH TO CONTROL CENTRAL AISLE LIGHTING AND OPEN OFFICE LIGHTING. ONCE TENNANT IMPROVEMENT IS IMPLEMENTED, ADDITIONAL CONTROLS CAN BE INSTALLED TO TURN ON DESIGNATED AREAS.
8. PROVIDE LUTRON #CC-4BRL-WH TO CONTROL LOBBY LIGHTING.
9. PROVIDE DAYLIGHT SENSOR IN CEILING FOR LIGHT FIXUTRES IN LOBBY.
10. PROVIDE TIMER SWITCH.
11. PROVIDE CONNECTION TO LOBBY LIGHTS IN FIRST FLOOR LOBBY.
12. PROVIDE TIMER SWITCH AND MOUNT ABOVE COUNTER. COMBINE WITH SWITCH FOR GARBAGE DISPOSAL. SEE E421.

LIGHTING CONTROL SCHEDULE:

a. EXTERIOR STAIRS:
QUANTUM TIMECLOCK TURNS LIGHTS ON AT DESIGNATED TIME AFTER HOURS AND OFF AT DESIGNATED TIME IN MORNING WITH SUFFICIENT DAYLIGHT.

b. CENTRAL AISLE LIGHTS:
QUANTUM TIMECLOCK TURNS LIGHTS ON AT DESIGNATED TIME AT START OPERATING HOURS AND TURNS LIGHTS OFF (EXCEPT EMERGENCY LIGHTS) AT DESIGNATED TIME AFTER HOURS.

c. OPEN OFFICE AREA:
QUANTUM TIMECLOCK TURNS LIGHTS ON AT DESIGNATED TIME AT START OPERATING HOURS AND TURNS LIGHTS OFF (EXCEPT EMERGENCY LIGHTS) AT DESIGNATED TIME AFTER HOURS.

LIGHTS MANUALLY TURNED WILL HAVE QUANTUM TIMECLOCK FLASH LIGHTS TO WARN LIGHTS WILL BE TURNED OFF AT DESIGNATED TIME AFTER HOURS. UPON MANUAL OVERRIDE LIGHTS WILL REMAIN ON FOR A DESIGNATED TIME.

ONCE TENANT IMPROVEMENT IS IMPLEMENTED CONTROL CAN BE CHANGED TO DESIRED APPLICATION FOR INDIVIDUAL AREAS (EXAMPLE: INDIVIDUAL OFFICES, CONFERENCE ROOMS).

DAYLIGHT SENSORS TO PROVIDE DAYLIGHT DIMMING TO 10%

d. LOBBY:
QUANTUM TIMECLOCK TURNS LIGHTS ON AT DESIGNATED TIME AT START OPERATING HOURS AND TURNS LIGHTS OFF (EXCEPT EMERGENCY LIGHTS) AT DESIGNATED TIME AFTER HOURS.

DAYLIGHT SENSORS TO PROVIDE DAYLIGHT DIMMING TO 10%

e. RESTROOM:
MANUAL ON/ AUTO OFF WITH CEILING MOUNTED DUAL-TECH OCCUPANCY SENSOR.

PROJECT STATUS

BID SET 04/27/09

ISSUE			
MARK	DATE	DESCRIPTION	INITIAL

KEY PLAN

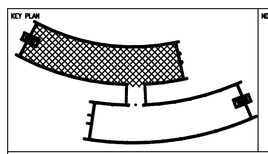

NORTH ARROW

3/32"=1' 0 8 16 32 48

DRAWN	S. KANDA	DATE
DESIGNED	L + U	DATE
CHECKED	D. KING	DATE
PRELIMGR	J. GRANT	DATE
REVIEWEDBY	R. SCHULER	DATE
FACDA		DATE
SAFETY		DATE
SUPERVISOR	S FRANKEL	DATE

Ames Research Center
Moffet Field, California

N232 COLLABORATIVE SUPPORT FACILITY
SECOND FLOOR
LIGHTING PLAN
NORTH WING

SIZE	CAGE CODE		REV
D	25307	A232-0800- E321	
SCALE		INDEX	SHEET OF

DWG: Q:\60248683 - NASA Ames CSF N232\500 CAD\E\Sheet\E321.dwg User: zachn
DATE: Apr 20, 2009 - 10:22:17 am Images:
Xrefs: "AFF02" "XBDR-SHORT" "XLT002" "AFF02-SPACE PLAN" "N232_S09_CENTRAL_rvt-1-Level 2 Export- Space Plan" "xgrid

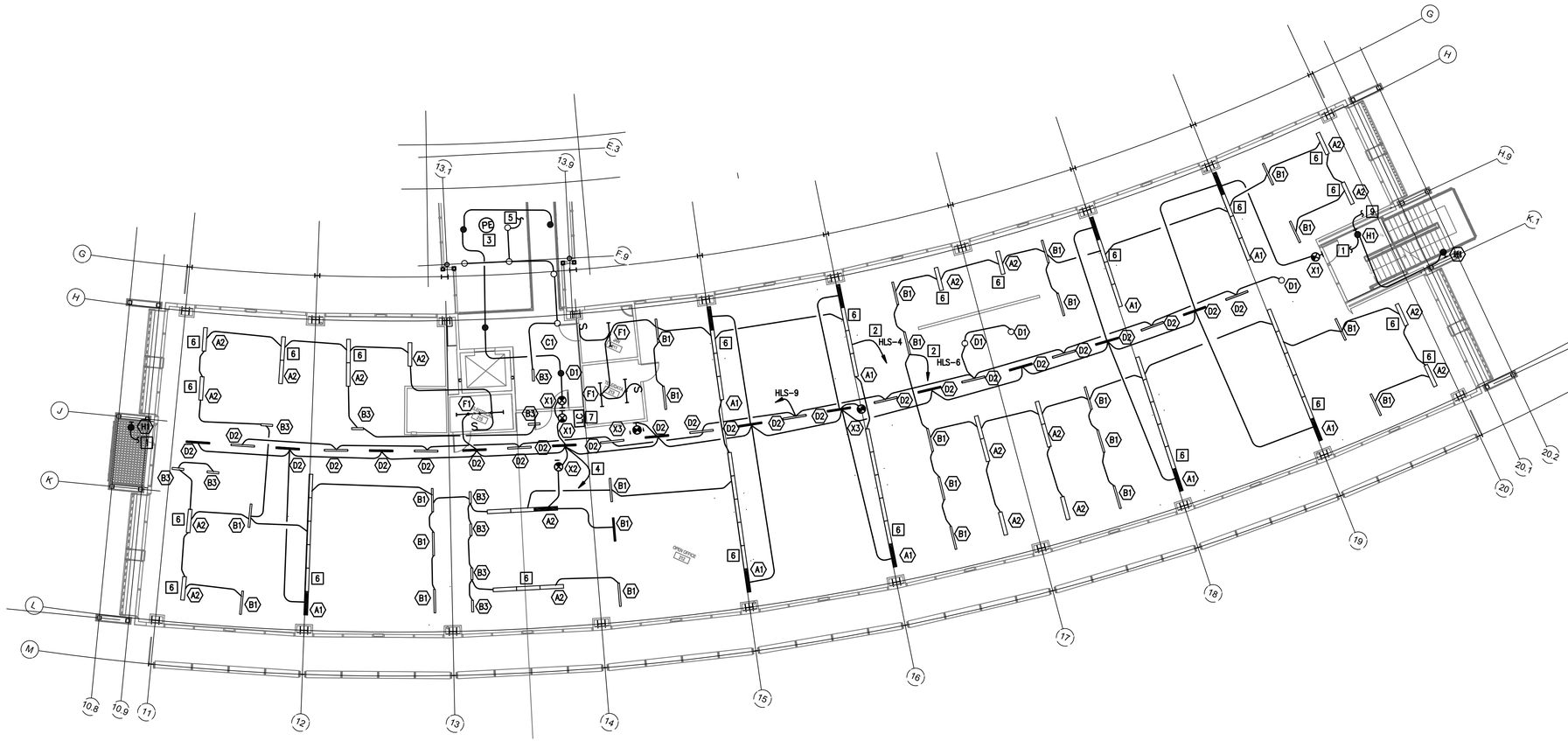

GENERAL NOTES:

1. SEE SHEET E001 AND E002 FOR SYMBOLS, ABBREVIATIONS AND GENERAL NOTES.
2. SEE SHEET E905 FOR LIGHTING CONTROL DIAGRAM.

PLAN NOTES:

1. PROVIDE CONNECTION TO H1 FIXTURES THAT ARE LOCATED ON FIRST LEVEL.
2. PROVIDE CONTROL CIRCUIT CONNECTION TO LCS. SEE E905
3. PROVIDE DAYLIGHT SENSOR IN CEILING FOR LIGHT FIXUTRES IN LOBBY.
4. PROVIDE CONNECTION TO LIFE SAFETY INVERTER IN ELECTRICAL ROOM 107.
5. SEE E321 FOR CONTINUATION OF CIRCUIT.
6. PROVIDE INTEGRAL DAYLIGHT SENSOR IN FIXTURE. AFTER INSTALL PROVIDE ADJUSTMENT ON EACH INDIVIDUAL FIXTURE BASED ON DISTANCE FROM WINDOW AND DESIRED LIGHT LEVEL.
7. PROVIDE LUTRON #CC-1BRL-WH TO CONTROL CENTRAL AISLE LIGHTING AND OPEN OFFICE LIGHTING. ONCE TENNANT IMPROVEMENT IS IMPLEMENTED, ADDITIONAL CONTROLS CAN BE INSTALLED TO TURN ON DESIGNATED AREAS.
8. PROVIDE LUTRON #CC-4BRL-WH TO CONTROL LOBBY LIGHTING.
9. PROVIDE CONNECTION TO H1 FIXTURES LOCATED ON ROOF LEVEL.

LIGHTING CONTROL SCHEDULE:

a. EXTERIOR STAIRS:
QUANTUM TIMECLOCK TURNS LIGHTS ON AT DESIGNATED TIME AFTER HOURS AND OFF AT DESIGNATED TIME IN MORNING WITH SUFFICIENT DAYLIGHT.

b. CENTRAL AISLE LIGHTS:
QUANTUM TIMECLOCK TURNS LIGHTS ON AT DESIGNATED TIME AT START OPERATING HOURS AND TURNS LIGHTS OFF (EXCEPT EMERGENCY LIGHTS) AT DESIGNATED TIME AFTER HOURS. MANUAL OVERRIDE PROVIDED. SEE KEYNOTE #7.

c. OPEN OFFICE AREA:
QUANTUM TIMECLOCK TURNS LIGHTS ON AT DESIGNATED TIME AT START OPERATING HOURS AND TURNS LIGHTS OFF (EXCEPT EMERGENCY LIGHTS) AT DESIGNATED TIME AFTER HOURS.

LIGHTS MANUALLY TURNED WILL HAVE QUANTUM TIMECLOCK FLASH LIGHTS TO WARN LIGHTS WILL BE TURNED OFF AT DESIGNATED TIME AFTER HOURS. UPON MANUAL OVERRIDE LIGHTS WILL REMAIN ON FOR A DESIGNATED TIME.

ONCE TENANT IMPROVEMENT IS IMPLEMENTED CONTROL CAN BE CHANGED TO DESIRED APPLICATION FOR INDIVIDUAL AREAS (EXAMPLE: INDIVIDUAL OFFICES, CONFERENCE ROOMS).

DAYLIGHT SENSORS TO PROVIDE DAYLIGHT DIMMING TO 10%

d. LOBBY:
QUANTUM TIMECLOCK TURNS LIGHTS ON AT DESIGNATED TIME AT START OPERATING HOURS AND TURNS LIGHTS OFF (EXCEPT EMERGENCY LIGHTS) AT DESIGNATED TIME AFTER HOURS.

DAYLIGHT SENSORS TO PROVIDE DAYLIGHT DIMMING TO 10%

PROJECT STATUS

BID SET 04/27/09

ISSUE			
MARK	DATE	DESCRIPTION	INITIAL

KEY PLAN

NORTH ARROW

BLDG NORTH — TRUE NORTH

3/32"=1' 0 8 16 32 48

DRAWN	S. KANDA	DATE
DESIGNED	L + U	DATE
CHECKED	D. KING	DATE
PROJMGR	J. GRANT	DATE
REVIEWER	R. SCHULER	DATE
RSOA		DATE
SAFETY		DATE
SUPERVISOR	S FRANKEL	DATE

Ames Research Center
Moffet Field, California

N232 COLLABORATIVE SUPPORT FACILITY
SECOND FLOOR
LIGHTING PLAN
SOUTH WING

SIZE	CAGE CODE		REV
D	25307	A232-0800- E322	
SCALE	INDEX	SHEET OF	

DWG: Q:\60046883 – NASA Ames CSF N232\500 CAD\E\Sheet\E322.dwg User: zechn
DATE: Apr 28, 2009 – 10:23:4 am Images:
Xrefs: "xAFF02" "RDBR-SHART" "XLT002" "xAFF02-SPACE PLAN" "N232_S09_CENTRAL_rvt-1-Level 2 Export- Space Plan" "xgrid

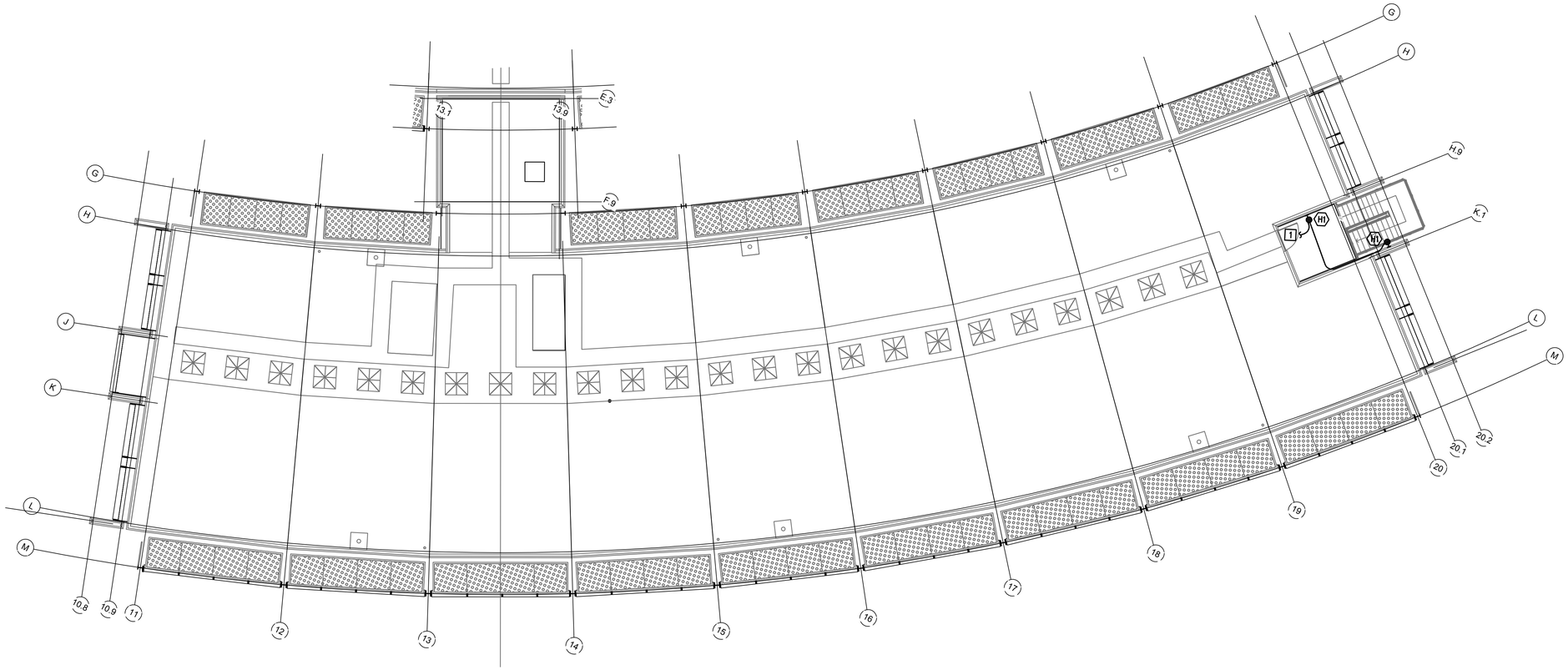

GENERAL NOTES:

1. SEE SHEET E001 AND E002 FOR SYMBOLS, ABBREVIATIONS AND GENERAL NOTES.
1. SEE SHEET E905 FOR LIGHTING CONTROL DIAGRAM.

PLAN NOTES:

1 PROVIDE CONNECTION TO H1 FIXTURES THAT ARE LOCATED ON SECOND LEVEL.

PROJECT STATUS

BID SET 04/27/09

ISSUE			
MARK	DATE	DESCRIPTION	INITIAL

KEY PLAN

NORTH ARROW

BLDG NORTH

TRUE NORTH

3/32"=1'

0 8 16 32 48

DRAWN	S. KANDA	DATE
DESIGNED	N. ZECH	DATE
CHECKED	D. KING	DATE
PROJMGR	J. GRANT	DATE
REQUESTOR	R. SCHULER	DATE
RSGA		DATE
SAFETY		DATE
SUPERVISOR	S FRANKEL	DATE

Ames Research Center
Moffet Field, California

N232 COLLABORATIVE SUPPORT FACILITY

ROOF
LIGHTING PLAN
SOUTH WING

SIZE	CAGE CODE		REV
D	25307	A232-0800- E332	
SCALE 3/32" = 1'-0"	INDEX	SHEET OF	

DWG: Q:\60046883 - NASA Ames CSF N232\500 CAD\E\Sheet\E332.dwg User: zechn
DATE: Apr 28, 2009 - 10:22:32 am Images:
Xrefs: XAMPO1 - RBDR-SHORT - XELIGHT - hybrid

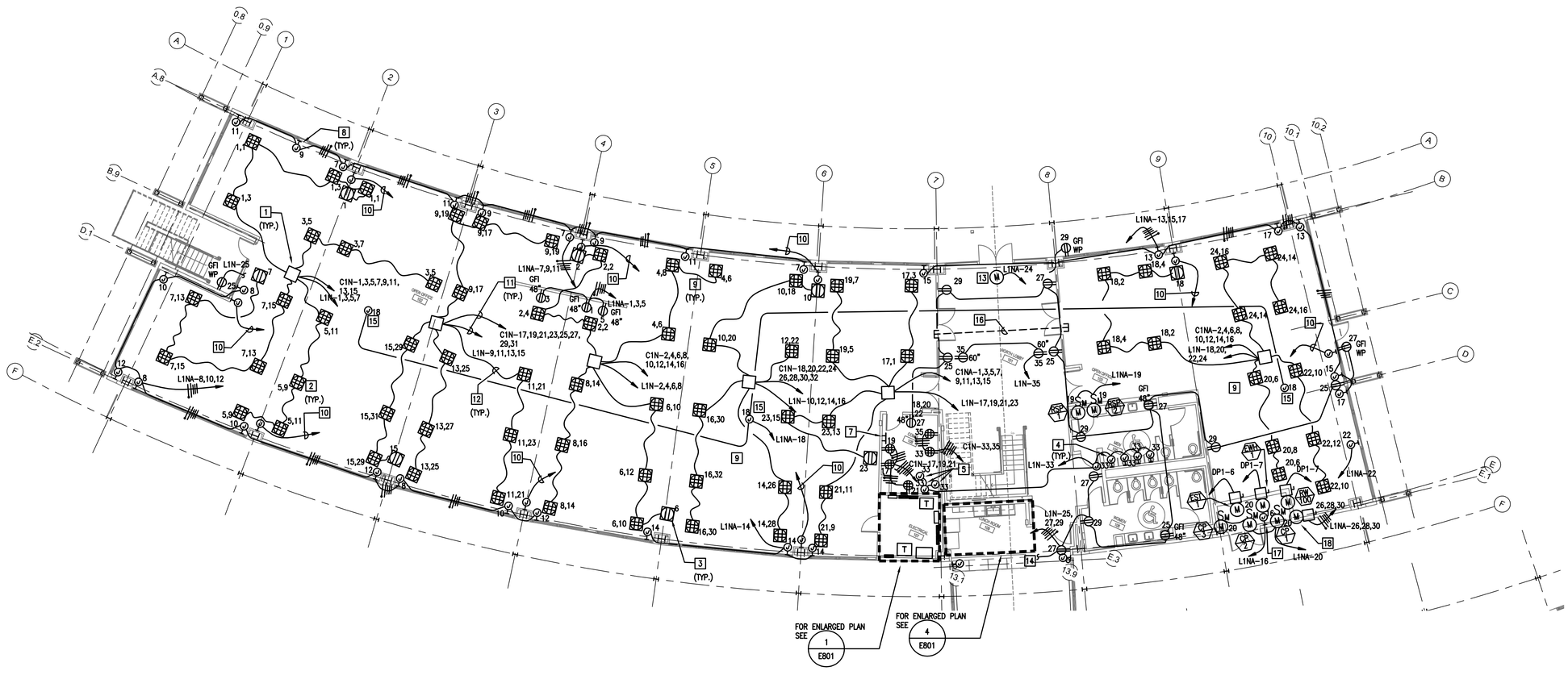

GENERAL NOTES:

1. SEE SHEET E001 AND E002 FOR SYMBOLS, ABBREVIATIONS AND GENERAL NOTES.
2. "C" PANELS ARE DEDICATED FOR COMPUTER LOADS AND "L" PANELS ARE FOR MISCELLANEOUS LOADS.

PLAN NOTES:

1. POWER DISTRIBUTION MODULE (PDM). SEE 3/E907.
2. PROVIDE RAISED FLOOR BOX WITH (3) DUPLEX RECEPTACLES AND (2) DATA AND (1) TELEPHONE JACK. SEE 4/E907. ONE DUPLEX RECEPTACLE TO BE MARKED AND PROVIDED FOR COMPUTER LOADS AND THE OTHER (2) TO BE PROVIDED FOR MISC. LOADS. SEE E511 FOR TELECOMMUNICATION CONNECTIONS.
3. PROVIDE RAISED FLOOR BOX WITH (1) DUPLEX RECEPTACLE.
4. PROVIDE 120V POWER TO URNIAL ACTUATION VALVE SENSOR POWER SUPPLY BOX RECESSED IN WALL. COORDINATE WITH INSTALLER.
5. PROVIDE 120V POWER CONNECTION TO FIRE/SMOKE DAMPER. COORDINATE WITH DIVISION 23.
6. NOT USED.
7. GROUND BAR. COORDINATE LOCATION WITH EQUIPMENT. SEE 6/906.
8. PROVIDE 120V CONNECTION FOR MECHO SHADE B1 CONTROLLER AND MOTOR OR APPROVED EQUAL TO SHADE CONTROL SYSTEM. COORDINATE WITH SHADE INSTALLER.
9. PROVIDE GROUNDING TO UNDERFLOOR PEDESTAL SYSTEM IN AREAS WITH RAISED FLOOR PER MANUFACTURERS RECOMMENDATIONS. SEE 1/E906 FOR PEDESTAL BOND DETAIL.
10. PROVIDE 24VDC CONNECTION FOR FUNCTIONAL FENESTRATION RB24 RELAY BOX OR APPROVED MOTORIZED WINDOW CONTROL SYSTEM FOR MOTORIZED WINDOWS. PROVIDE CONDUIT AND CONDUCTOR SIZE PER MANUFACTURERS RECOMMENDATIONS. PROVIDE CONNECTION TO ELECTRICAL ROOM 207. CONNECT TO POWER SUPPLY LOCATED IN POWER SUPPLY CABINET. SEE E802.
11. HOMERUN FOR PDM. SEE 6/E907.
12. ACCESS FLOOR BOX CONNECTOR. SEE 5/E907.
13. MOTORIZED DOOR OPENER.
14. SEE E801 FOR CONTINUATION OF CIRCUIT.
15. PROVIDE 120V CONNECTION TO FMCS FIELD PANEL LOCATED UNDERSIDE OF DECK. COORDINATE WITH FMCS INSTALLER. SEE M501.
16. PROVIDE (4) 4" CONDUITS BELOW CONCRETE SLAB SPACED 6 INCHES APART ON CENTER FOR FUTURE POWER. STUB UP AT BEGINNING OF RAISED FLOOR AREA.
17. PROVIDE 120V CONNECTION FOR OZONE CONTROL PANEL. VERIFY LOCATION WITH SYSTEM INSTALLER.
18. OZONE CIRCULATION PUMP. VERIFY LOCATION WITH SYSTEM INSTALLER.

PROJECT STATUS

BID SET 04/27/09

ISSUE			
MARK	DATE	DESCRIPTION	INITIAL

KEY PLAN

NORTH ARROW

BLDG NORTH / TRUE NORTH

3/32"=1' 0 8 16 32 48

		DATE
DRAWN	S. KANDA	
DESIGNED	N. ZECH	
CHECKED	D. KING	
PRELIMGR	J. GRANT	
REVIEWSTOR	R. SCHULER	
RAGA		
SAFETY		
SUPERVISOR	S FRANKEL	

Ames Research Center
Moffet Field, California

N232 COLLABORATIVE SUPPORT FACILITY

FIRST FLOOR POWER PLAN NORTH WING

SIZE	CAGE CODE		REV
D	25307	A232-0800- E411	
SCALE		INDEX SHEET OF	

DWG: Q:\60048663 - NASA Ames CSF N232\500 CAD\E\Sheet\E411.dwg User: zechn
DATE: Apr 28, 2009 - 10:25 am Images:
Xrefs: "xAFP01" "xARC01" "X6DR-SHORT" "xEEQP01" "xAFP01-SPACE PLAN" "N232_S09_CENTRAL_rvt-1-Level 1 Export- Space Plan" "xMFP01" "xMFP01-SPACEPLAN-N232_S09_CENTRAL-rvt-1-Level1Export" "xgrid

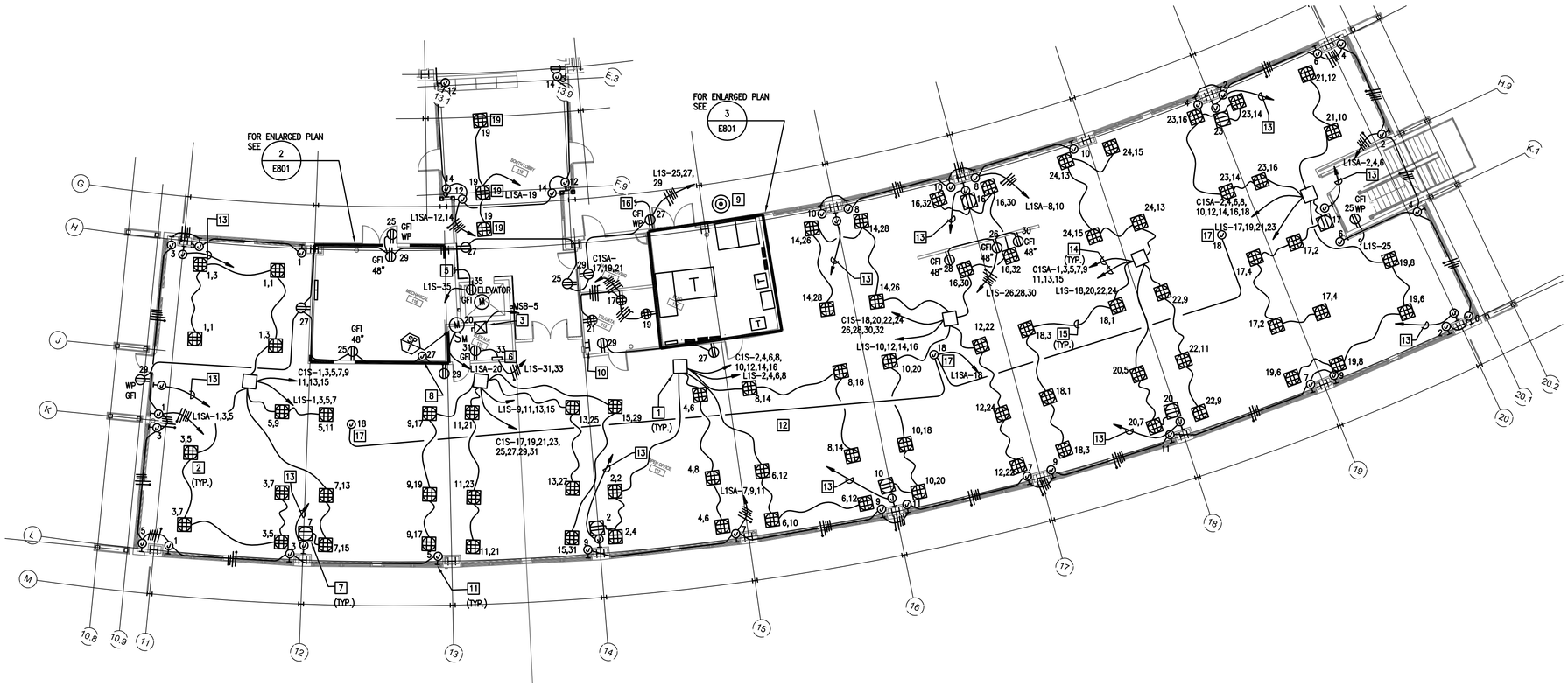

GENERAL NOTES:

1. SEE SHEET E001 AND E002 FOR SYMBOLS, ABBREVIATIONS AND GENERAL NOTES.
2. "C" PANELS ARE DEDICATED FOR COMPUTER LOADS AND "L" PANELS ARE FOR MISCELLANEOUS LOADS.

PLAN NOTES:

1. POWER DISTRIBUTION MODULE (PDM). SEE 3/E907.
2. PROVIDE RAISED FLOOR BOX WITH (3) DUPLEX RECEPTACLES AND (2) DATA AND (1) TELEPHONE JACK. SEE 4/E907. ONE DUPLEX RECEPTACLE TO BE MARKED AND PROVIDED FOR COMPUTER LOADS AND THE OTHER (2) TO BE PROVIDED FOR MISC. LOADS. SEE E511 FOR TELECOMMUNICATION CONNECTIONS.
3. ELEVATOR DISCONNECT MODULE. SEE E111.
4. NOT USED.
5. PROVIDE POWER CONNECTION TO PIT LIGHT AND SWITCH. SEE E312.
6. 20A, 120V ENCLOSED LOCKABLE CIRCUIT BREAKER IN NEMA 1 ENCLOSURE TO SERVE CAR LIGHT AND RECEPTACLE.
7. PROVIDE RAISED FLOOR BOX WITH (1) DUPLEX RECEPTACLE.
8. PROVIDE 120V POWER CONNECTION TO FIRE/SMOKE DAMPER. COORDINATE WITH DIVISION 23.
9. PROVIDE GROUND TEST WELL. SEE 8/906. PROVIDE GROUND RODS UNTIL RESISTANCE IS TESTED AND VERIFIED AT 25 OHMS OR LESS.
10. GROUND BAR. COORDINATE LOCATION WITH EQUIPMENT. SEE 6/906.
11. PROVIDE 120V CONNECTION FOR MECHO SHADE B1 CONTROLLER AND MOTOR OR APPROVED EQUAL TO SHADE CONTROL SYSTEM. COORDINATE WITH SHADE INSTALLER.
12. PROVIDE GROUNDING TO UNDERFLOOR PEDESTAL SYSTEM IN AREAS WITH RAISED FLOOR PER MANUFACTURERS RECOMMENDATIONS. SEE 1/E906 FOR PEDESTAL BOND DETAIL.
13. PROVIDE 24VDC CONNECTION FOR FUNCTIONAL FENESTRATION RB24 RELAY BOX OR APPROVED MOTORIZED WINDOW CONTROL SYSTEM FOR MOTORIZED WINDOWS. PROVIDE CONDUIT AND CONDUCTOR SIZE PER MANUFACTURERS RECOMMENDATIONS. PROVIDE CONNECTION TO ELECTRICAL ROOM 215. CONNECT TO POWER SUPPLY LOCATED IN POWER SUPPLY CABINET. SEE E802.
14. HOMERUN FOR PDM. SEE 6/E907.
15. ACCESS FLOOR BOX CONNECTOR. SEE 5/E907.
16. SEE E801 FOR CONTINUATION OF CIRCUIT.
17. PROVIDE 120V CONNECTION TO FMCS FIELD PANEL LOCATED UNDERSIDE OF DECK. COORDINATE WITH FMCS INSTALLER. SEE M501.
18. PROVIDE 120V CONNECTION TO FMCS FIELD PANEL LOCATED UNDERSIDE OF DECK. COORDINATE WITH FMCS INSTALLER. SEE M501.
19. PROVIDE RECEPTACLES FLUSH WITH FLOOR AND CENTER ON MULLION. PROVIDE BRUSHED ALUMINUM FLANGE AND COVERPLATE.

PROJECT STATUS

BID SET 04/27/09

ISSUE			
MARK	DATE	DESCRIPTION	INITIAL

KEY PLAN

NORTH ARROW

BLDG NORTH — TRUE NORTH

3/32"=1' 0 8 16 32 48

DRAWN	S. KANDA	DATE
DESIGNED	N. ZECH	DATE
CHECKED	D. KING	DATE
PRELIMER	J. GRANT	DATE
REQUESTER	R. SCHULER	DATE
RM&A		DATE
SAFETY		DATE
SUPERVISOR	S FRANKEL	DATE

Ames Research Center
Moffet Field, California

N232 COLLABORATIVE SUPPORT FACILITY

FIRST FLOOR POWER PLAN SOUTH WING

SIZE	CAGE CODE		REV
D	25307	A232-0800- E412	
SCALE	INDEX	SHEET OF	

DWG: Q:\60046863 - NASA Ames CSF N232\500 CAD\E\Sheet\E412.dwg User: zechn
DATE: Apr 28, 2009 - 07:18 am Images:
Xrefs: "AFP01" "AMC01" "XBDR-SHORT" "AEFW001" "xAFP01-SPACE PLAN" "N232_S09_CENTRAL_rvt-1-Level 1 Export- Space Plan" "xEEQP01" "xMEP01" "xgrid

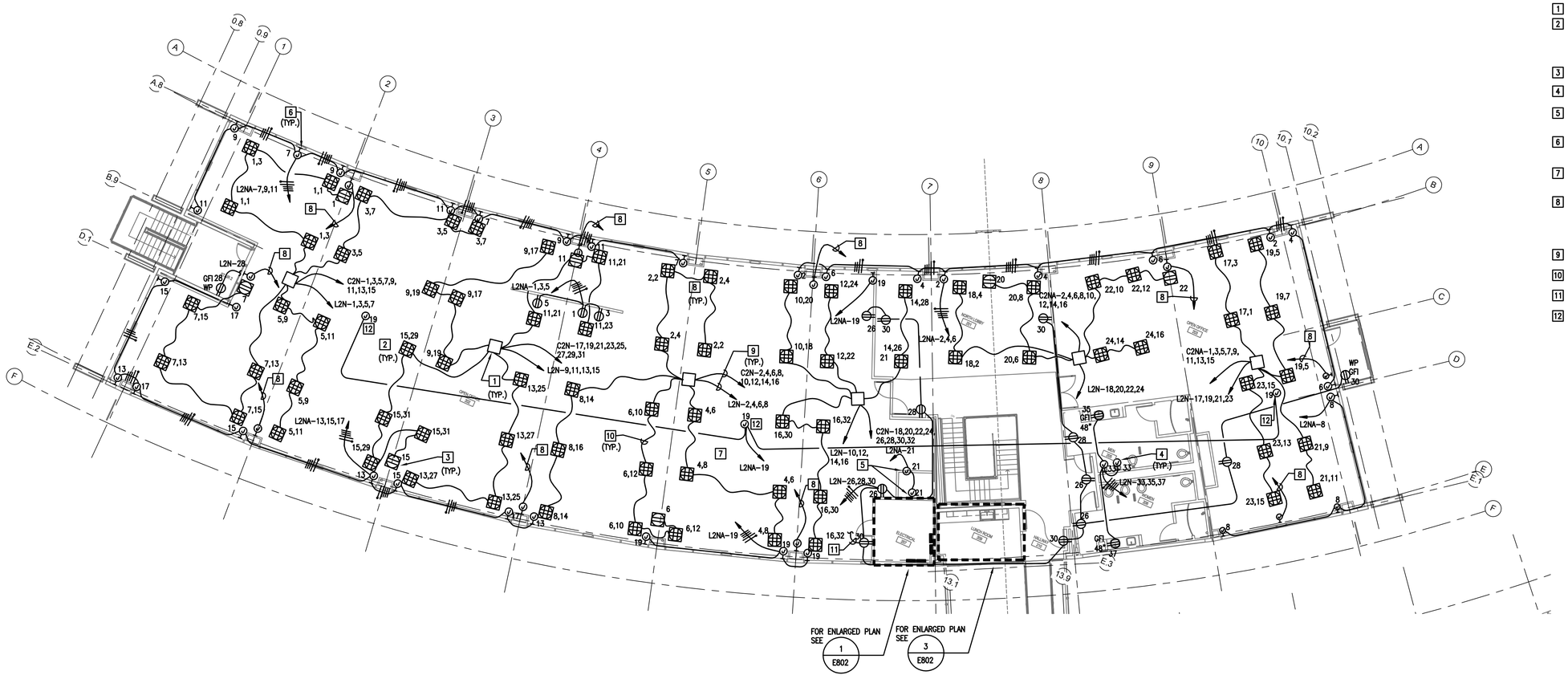

GENERAL NOTES:

1. SEE SHEET E001 AND E002 FOR SYMBOLS, ABBREVIATIONS AND GENERAL NOTES.
2. "C" PANELS ARE DEDICATED FOR COMPUTER LOADS AND "L" PANELS ARE FOR MISCELLANEOUS LOADS.

PLAN NOTES:

1. POWER DISTRIBUTION MODULE (PDM). SEE 3/E907.
2. PROVIDE RAISED FLOOR BOX WITH (3) DUPLEX RECEPTACLES AND (2) DATA AND (1) TELEPHONE JACK. SEE 4/E907. ONE DUPLEX RECEPTACLE TO BE MARKED AND PROVIDED FOR COMPUTER LOADS AND THE OTHER (2) TO BE PROVIDED FOR MISC. LOADS. SEE E521 FOR TELECOMMUNICATION CONNECTIONS.
3. PROVIDE RAISED FLOOR BOX WITH (1) DUPLEX RECEPTACLE.
4. PROVIDE 120V POWER TO URNIAL ACTUATION VALVE SENSOR POWER SUPPLY BOX RECESSED IN WALL. COORDINATE WITH INSTALLER.
5. PROVIDE 120V POWER CONNECTION TO FIRE/SMOKE DAMPER. COORDINATE WITH DIVISION 23.
6. PROVIDE 120V CONNECTION FOR MECHO SHADE B1 CONTROLLER AND MOTOR OR APPROVED EQUAL TO SHADE CONTROL SYSTEM. COORDINATE WITH SHADE INSTALLER.
7. PROVIDE GROUNDING TO UNDERFLOOR PEDESTAL SYSTEM IN AREAS WITH RAISED FLOOR PER MANUFACTURERS RECOMMENDATIONS. SEE 1/E906 FOR PEDESTAL BOND DETAIL.
8. PROVIDE 24VDC CONNECTION FOR FUNCTIONAL FENESTRATION RB24 RELAY BOX OR APPROVED MOTORIZED WINDOW CONTROL SYSTEM FOR MOTORIZED WINDOWS. PROVIDE CONDUIT AND CONDUCTOR SIZE PER MANUFACTURERS RECOMMENDATIONS. PROVIDE CONNECTION TO ELECTRICAL ROOM 207. CONNECT TO POWER SUPPLY LOCATED IN POWER SUPPLY CABINET. SEE E802.
9. HOMERUN FOR PDM. SEE 6/E907.
10. ACCESS FLOOR BOX CONNECTOR. SEE 5/E907.
11. SEE 1/E802 FOR CONTINUATION OF CIRCUIT.
12. PROVIDE 120V CONNECTION TO FMCS FIELD PANEL LOCATED UNDERSIDE OF DECK. COORDINATE WITH FMCS INSTALLER. SEE M501.

PROJECT STATUS

BID SET 04/27/09

ISSUE			
MARK	DATE	DESCRIPTION	INITIAL

KEY PLAN

NORTH ARROW

BLDG NORTH — TRUE NORTH

3/32"=1' 0 8 16 32 48

DRAWN	S. KANDA	DATE
DESIGNED	N. ZECH	DATE
CHECKED	D. KING	DATE
PROJMGR	J. GRANT	DATE
REQUESTOR	R. SCHULER	DATE
FSQA		DATE
SAFETY		DATE
SUPERVISOR	S FRANKEL	DATE

Ames Research Center
Moffet Field, California

N232 COLLABORATIVE SUPPORT FACILITY

SECOND FLOOR POWER PLAN NORTH WING

SIZE	CAGE CODE		REV
D	25307	A232-0800- E421	
SCALE		INDEX	SHEET OF

DWG: Q:\60046883 - NASA Ames CSF N232\500 CAD\E\Sheet\E421.dwg User: zechn
DATE: Apr 28, 2009 - 10:22:12 am Images
Xrefs: "AVFP02" "RBDR-SHORT" "AEFWR02" "AEGPR02" "AVFP02-SPACE PLAN" "N232_S09_CENTRAL_rvt-1-Level 2 Export- Space Plan" "xgrid

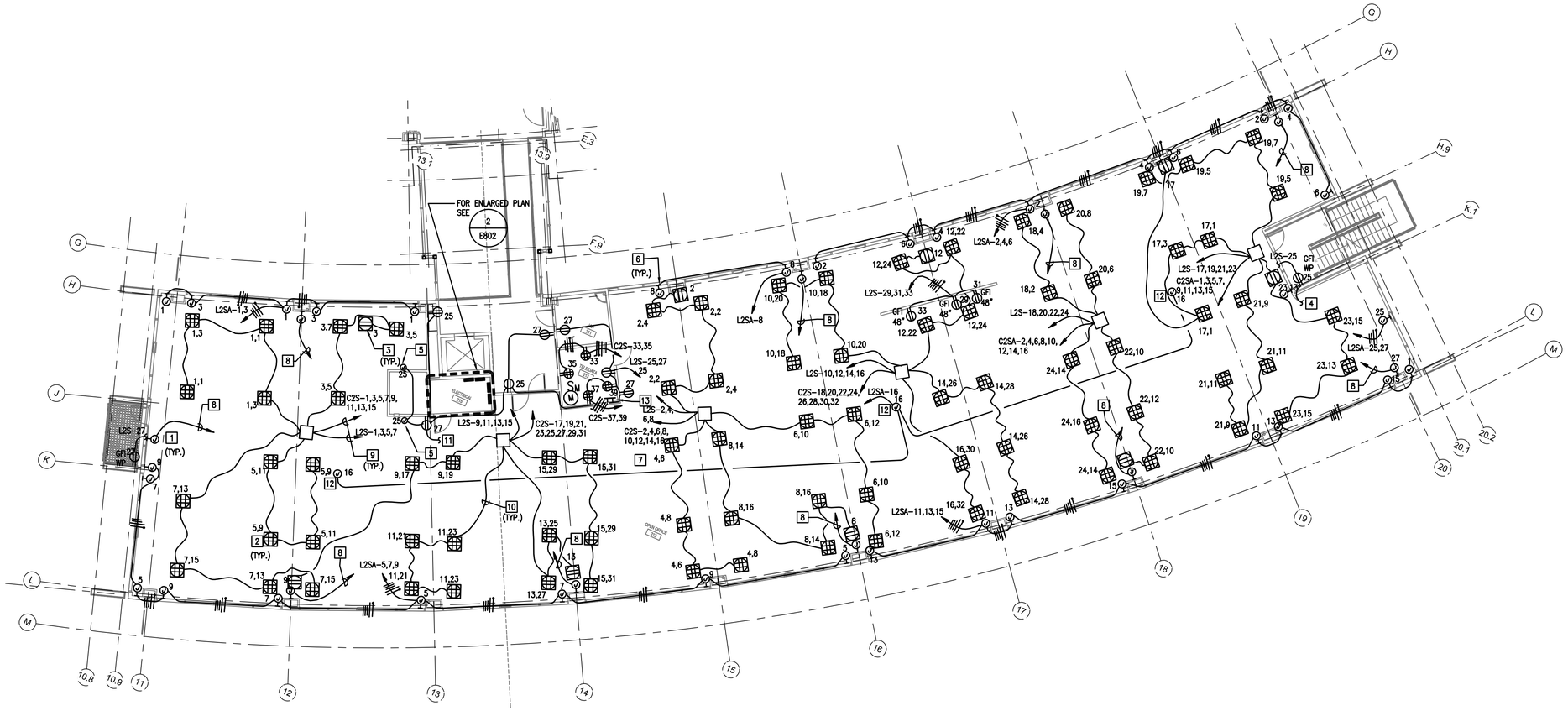

GENERAL NOTES:

1. SEE SHEET E001 AND E002 FOR SYMBOLS, ABBREVIATIONS AND GENERAL NOTES.
2. "C" PANELS ARE DEDICATED FOR COMPUTER LOADS AND "L" PANELS ARE FOR MISCELLANEOUS LOADS.

PLAN NOTES:

1. POWER DISTRIBUTION MODULE (PDM). SEE 3/E907.
2. PROVIDE RAISED FLOOR BOX WITH (3) DUPLEX RECEPTACLES AND (2) DATA AND (1) TELEPHONE JACK. SEE 4/E907. ONE DUPLEX RECEPTACLE TO BE MARKED AND PROVIDED FOR COMPUTER LOADS AND THE OTHER (2) TO BE PROVIDED FOR MISC. LOADS. SEE E522 FOR TELECOMMUNICATION CONNECTIONS.
3. PROVIDE RAISED FLOOR BOX WITH (1) DUPLEX RECEPTACLE.
4. CONNECT TO RECEPTACLE ON ROOF LEVEL. SEE E431.
5. PROVIDE 120V POWER CONNECTION TO FIRE/SMOKE DAMPER. COORDINATE WITH DIVISION 23.
6. PROVIDE 120V CONNECTION FOR MECHO SHADE B1 CONTROLLER AND MOTOR OR APPROVED EQUAL TO SHADE CONTROL SYSTEM. COORDINATE WITH SHADE INSTALLER.
7. PROVIDE GROUNDING TO UNDERFLOOR PEDESTAL SYSTEM IN AREAS WITH RAISED FLOOR PER MANUFACTURERS RECOMMENDATIONS. SEE 1/E906 FOR PEDESTAL BOND DETAIL.
8. PROVIDE 24VDC CONNECTION FOR FUNCTIONAL FENESTRATION RB24 RELAY BOX OR APPROVED MOTORIZED WINDOW CONTROL SYSTEM FOR MOTORIZED WINDOWS. PROVIDE CONDUIT AND CONDUCTOR SIZE PER MANUFACTURERS RECOMMENDATIONS. PROVIDE CONNECTION TO ELECTRICAL ROOM 207. CONNECT TO POWER SUPPLY LOCATED IN POWER SUPPLY CABINET. SEE E802.
9. HOMERUN FOR PDM. SEE 6/E907.
10. ACCESS FLOOR BOX CONNECTOR. SEE 5/E907.
11. SEE 2/E802 FOR CONTINUATION OF CIRCUIT.
12. PROVIDE 120V CONNECTION TO FMCS FIELD PANEL LOCATED UNDERSIDE OF DECK. COORDINATE WITH FMCS INSTALLER. SEE M501.
13. GROUND BAR. COORDINATE LOCATION WITH EQUIPMENT. SEE 6/906.

KEY PLAN

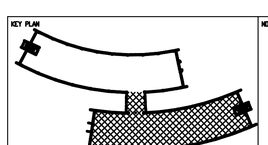

NORTH ARROW

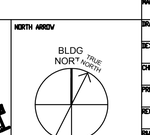

3/32"=1' 0 8 16 32 48

PROJECT STATUS

BID SET 04/27/09

ISSUE			
MARK	DATE	DESCRIPTION	INITIAL

DRAWN	S. KANDA	DATE
DESIGNED	N. ZECH	DATE
CHECKED	D. KING	DATE
PROJMGR	J. GRANT	DATE
REQUESTOR	R. SCHULER	DATE
RSOA		DATE
SAFETY		DATE
SUPERVISOR	S FRANKEL	DATE

Ames Research Center
Moffet Field, California

N232 COLLABORATIVE SUPPORT FACILITY

SECOND FLOOR POWER PLAN SOUTH WING

SIZE	CAGE CODE		REV
D	25307	A232-0800- E422	
SCALE		INDEX	SHEET OF

DWG: Q:\00046883 - NASA Ames CSF N232\500 CAD\E\Sheet\E422.dwg User: zechn
DATE: April 28, 2009 - 10:23:55 am
Xrefs: "xAFP02" "RDBR-SHART" "xFMR02" "xEQOP02" "xAFP02-SPACE PLAN" "N232_S09_CENTRAL_rvt-1-Level 2 Export- Space Plan" "xgrid

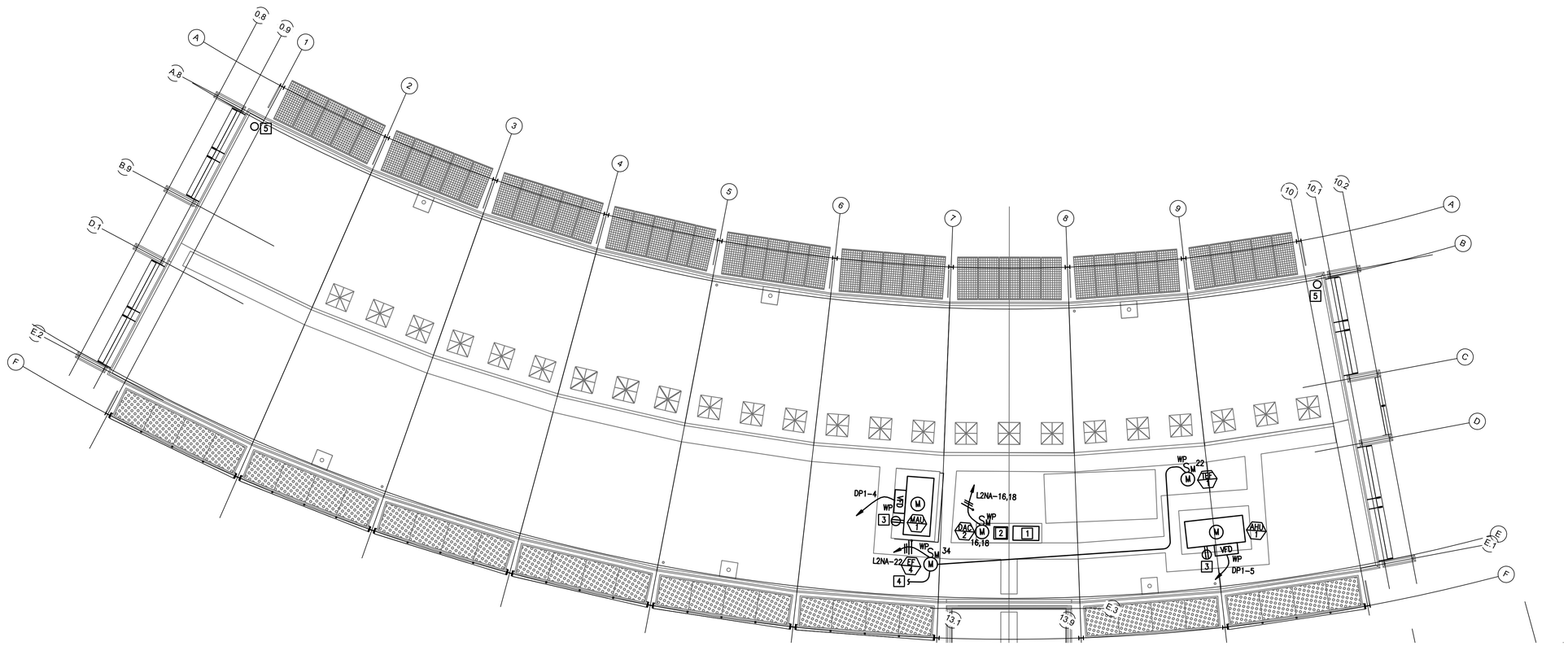

GENERAL NOTES:

1. SEE SHEET E001 AND E002 FOR SYMBOLS, ABBREVIATIONS AND GENERAL NOTES.

PLAN NOTES:

1. AREA FOR FUTURE INVERTER SYSTEM.
2. INVERTER LOCATION. SEE E111.
3. INTEGRAL WEATHERPROOF, GFI MAINTENANCE RECEPTACLE PROVIDED AND INSTALLED BY DIVISION 23.
4. PROVIDE POWER CONNECTION INDOOR UNIT LOCATED IN COMM ROOM 108.
5. PROVIDE 3/4 CONDUIT PENETRATION AT ROOF LEVEL. SEAL AND CAP. RUN CONDUIT DOWN TO 2ND FLOOR UNDERFLOOR LEVEL AND DOWN TO FIRST FLOOR ROOM 107 FOR FUTURE CCTV CAMERAS.

PROJECT STATUS

BID SET 04/27/09

ISSUE			
MARK	DATE	DESCRIPTION	INITIAL

KEY PLAN

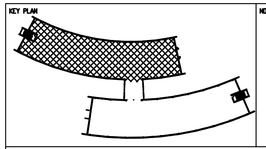

NORTH ARROW

3/32"=1' 0 8 16 32 48

DRAWN	S. KANDA	DATE
DESIGNED	N. ZECH	DATE
CHECKED	D. KING	DATE
PRIJMER	J. GRANT	DATE
REQUESTOR	R. SCHULER	DATE
RGOA		DATE
SAFETY		DATE
SUPERVISOR	S FRANKEL	DATE

Ames Research Center
Moffet Field, California

N232 COLLABORATIVE SUPPORT FACILITY

ROOF POWER PLAN NORTH WING

SIZE	CAGE CODE		REV
D	25307	A232-0800- E431	
SCALE 3/32" = 1'-0"	INDEX	SHEET OF	

DWG: Q:\60048683 - NASA Ames CSF N232\300 CAD\E\Sheet\E431.dwg User: zechn
DATE: Apr 20, 2009 - 10:25:53 am Images:
Xrefs: *xNRF01* "ADBR-SHORT" "ACFNRRF" "xNRF01" "*xgrid

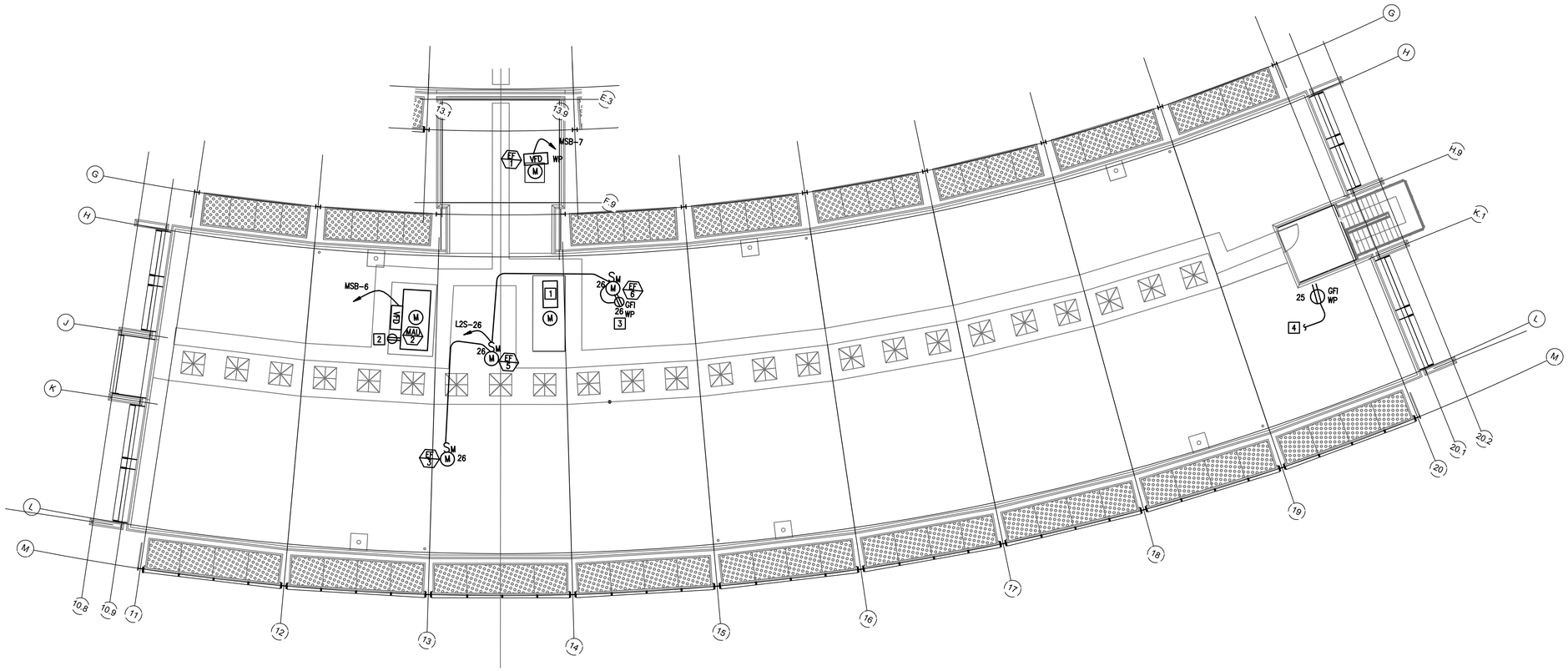

GENERAL NOTES:

1. SEE SHEET E001 AND E002 FOR SYMBOLS, ABBREVIATIONS AND GENERAL NOTES.

PLAN NOTES:

1. AREA FOR FUTURE INVERTER SYSTEM.
2. INTEGRAL WEATHERPROOF, GFI MAINTENANCE RECEPTACLE PROVIDED AND INSTALLED BY DIVISION 23.
3. PROVIDE WEATHERPROOF, GFI MAINTENANCE RECEPTACLE.
4. CONNECT TO CIRCUIT BELOW. SEE E422.

KEY PLAN

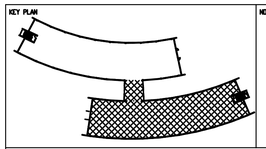

NORTH ARROW

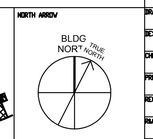

3/32"=1' 0 8 16 32 48

PROJECT STATUS

BID SET 04/27/09

ISSUE			
MARK	DATE	DESCRIPTION	INITIAL

		DATE
DRAWN	S. KANDA	
DESIGNED	N. ZECH	
CHECKED	D. KING	
PROJMGR	J. GRANT	
REQUESTOR	R. SCHULER	
FSQA		
SAFETY		
SUPERVISOR	S FRANKEL	

Ames Research Center
Moffet Field, California

N232 COLLABORATIVE SUPPORT FACILITY

ROOF POWER PLAN SOUTH WING

SIZE	CAGE CODE		REV
D	25307	A232-0800- E432	
SCALE 3/32" = 1'-0"	INDEX	SHEET OF	

DWG: Q:\60046883 - NASA Ames CSF N232\500 CAD\E\Sheet\E432.dwg User: zechn
DATE: Apr 28, 2009 - 10:22:50 am Images
Xrefs: "AMFO1" "AMFO1" "RDOR-SHORT" "KEYWRRF" "xgrid

GENERAL NOTES:

1. SEE SHEET E001 AND E002 FOR SYMBOLS, ABBREVIATIONS AND GENERAL NOTES.

PLAN NOTES:

1. TELEPHONE/DATA TO BE INTEGRATED IN ACCESS BOX WITH POWER. SEE E411.
2. 4"X18" WIRE BASKET CABLE TRAY MOUNTED ON UNISTRUT CHANNELS. BUTT SPLICE TRAY AT COLUMN LINES AS SHOWN WITH MAXIMUM GAP OF 3". SEE DETAIL 1/E908.
3. PROVIDE DATA CONNECTION FOR MECHO SHADE B1 CONTROLLER OR APPROVED EQUAL TO SHADE CONTROL SYSTEM. COORDINATE WITH SHADE INSTALLER.
4. CABLE TRAY TEE SECTION.
5. PROVIDE TWO 4" DIAMETER PVC CONDUITS BELOW SLAB. STUB UP AND ALIGNED WITH CABLE TRAY AT BOTH ENDS.
6. PROVIDE THREE 4" DIAMETER SLEEVES THROUGH 2ND FLOOR SLAB.
7. TELECOMMUNICATION CONNECTION FOR FIRE ALARM PANEL AND TRANSCEIVER. COORDINATE WITH FIRE ALARM INSTALLER.
8. PROVIDE TWO 4" DIAMETER PVC CONDUITS BELOW SLAB FOR FUTURE BETWEEN NORTH AND SOUTH WING RAISED FLOORS. STUB AT BEGINNING OF RAISED FLOOR AREA.
9. SEE E512 FOR CONTINUATION.
10. COMBINE OUTLET WITH POWER AT SAME LOCATION. SEE E411.

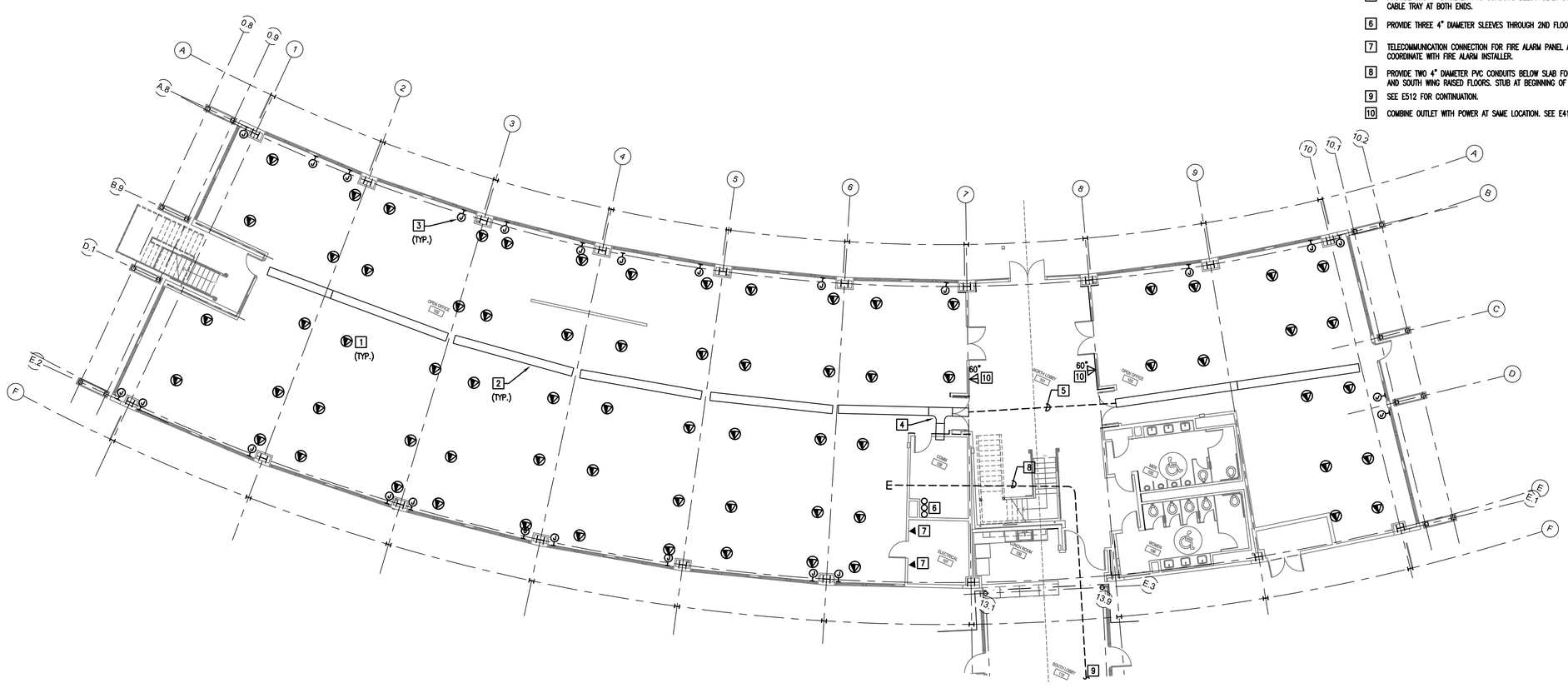

PROJECT STATUS

BID SET 04/27/09

ISSUE			
MARK	DATE	DESCRIPTION	INITIAL

KEY PLAN

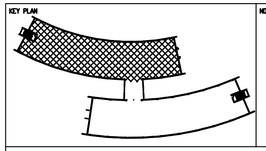

NORTH ARROW

3/32"=1' 0 8 16 32 48

DRAWN	S. KANDA	DATE
DESIGNED	N. ZECH	DATE
CHECKED	D. KING	DATE
PRELIMGR	J. GRANT	DATE
REVIEWER	R. SCHULER	DATE
RAGA		DATE
SAFETY		DATE
SUPERVISOR	S FRANKEL	DATE

Ames Research Center
Moffet Field, California

N232 COLLABORATIVE SUPPORT FACILITY

FIRST FLOOR COMMUNICATIONS PLAN NORTH WING

SIZE	CAGE CODE		REV
D	25307	A232-0800- E511	
SCALE	INDEX	SHEET OF	

DWG: Q:\60248683_ - NASA Ames CSF N232\500 CAD\E\Sheet\E511.dwg User: zechn
DATE: Apr 28, 2009 - 10:22:44 am Images:
Xrefs: %XFT01 %XRC01 *RBXR-SHORT *ECOM01 * *xgrid

GENERAL NOTES:

1. SEE SHEET E001 AND E002 FOR SYMBOLS, ABBREVIATIONS AND GENERAL NOTES.

PLAN NOTES:

1. TELEPHONE/DATA TO BE INTEGRATED IN ACCESS BOX WITH POWER. SEE E411.
2. 4"X18" WIRE BASKET CABLE TRAY MOUNTED ON UNISTRUT CHANNELS. BUTT SPLICE TRAY AT COLUMN LINES AS SHOWN WITH MAXIMUM GAP OF 3". SEE DETAIL 1/E908.
3. PROVIDE DATA CONNECTION FOR MECHO SHADE B1 CONTROLLER OR APPROVED EQUAL TO SHADE CONTROL SYSTEM. COORDINATE WITH SHADE INSTALLER.
4. CABLE TRAY TEE SECTION.
5. TWO 4" DIAMETER PVC CONDUIT SLEEVES ALIGNED WITH CABLE TRAY AT BOTH ENDS.
6. PROVIDE J-BOX FOR ELEVATOR CAB TELEPHONE CONNECTION. PROVIDE RACEWAY TO RM 113. COORDINATE WITH ELEVATOR INSTALLER.
7. PROVIDE THREE 4" DIAMETER SLEEVES THROUGH SLAB TO FIRST FLOOR.
8. PROVIDE TWO 4" DIAMETER PVC CONDUITS BELOW SLAB FOR FUTURE BETWEEN NORTH AND SOUTH WING RAISED FLOORS. STUB AT BEGINNING OF RAISED FLOOR AREA.
9. SEE E511 FOR CONTINUATION.

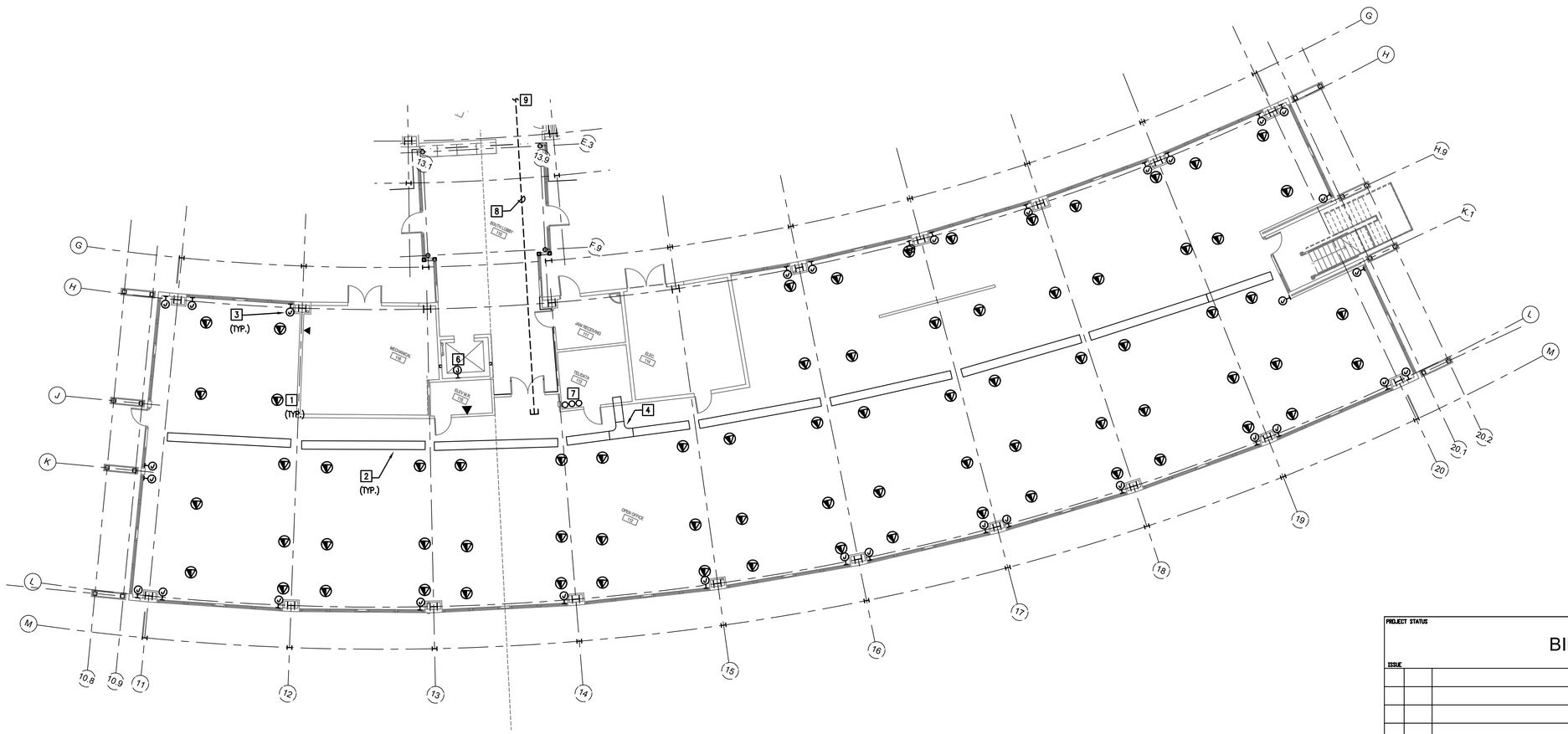

KEY PLAN

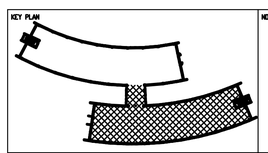

NORTH ARROW

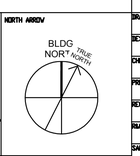

3/32"=1' 0 8 16 32 48

PROJECT STATUS

BID SET 04/27/09

ISSUE			
MARK	DATE	DESCRIPTION	INITIAL

DRAWN	S. KANDA	DATE
DESIGNED	N. ZECH	DATE
CHECKED	D. KING	DATE
PRELIMGR	J. GRANT	DATE
REVIEWEDTOR	R. SCHULER	DATE
RAGM		DATE
SAFETY		DATE
SUPERVISOR	S FRANKEL	DATE

Ames Research Center
Moffet Field, California

N232 COLLABORATIVE SUPPORT FACILITY

FIRST FLOOR COMMUNICATIONS PLAN SOUTH WING

SIZE	CAGE CODE		REV
D	25307	A232-0800- E512	
SCALE	INDEX	SHEET OF	

DWG: Q:\60048663 - NASA Ames CSF N232\900 CAD\E\Sheet\E512.dwg User: zechn
DATE: Apr 20, 2009 - 10:23:38 am Images:
Xrefs: "xAFP01" "xARC01" "XBDR-SHORT" "XECOM01" "xgrid

GENERAL NOTES:

1. SEE SHEET E001 AND E002 FOR SYMBOLS, ABBREVIATIONS AND GENERAL NOTES.

PLAN NOTES:

1. TELEPHONE/DATA TO BE INTEGRATED IN ACCESS BOX WITH POWER. SEE E411.
2. 4"X18" WIRE BASKET CABLE TRAY MOUNTED ON UNISTRUT CHANNELS. BUTT SPLICE TRAY AT COLUMN LINES AS SHOWN WITH MAXIMUM GAP OF 3". SEE DETAIL 1/E908.
3. PROVIDE DATA CONNECTION FOR WECHO SHADE B1 CONTROLLER OR APPROVED EQUAL TO SHADE CONTROL SYSTEM. COORDINATE WITH SHADE INSTALLER.
4. CABLE TRAY TEE SECTION OR 90° TURN SECTION.
5. TWO 4" DIAMETER PVC CONDUIT SLEEVES ALIGNED WITH CABLE TRAY AT BOTH ENDS.
6. PROVIDE THREE 4" DIAMETER SLEEVES DOWN THROUGH 2ND FLOOR SLAB.

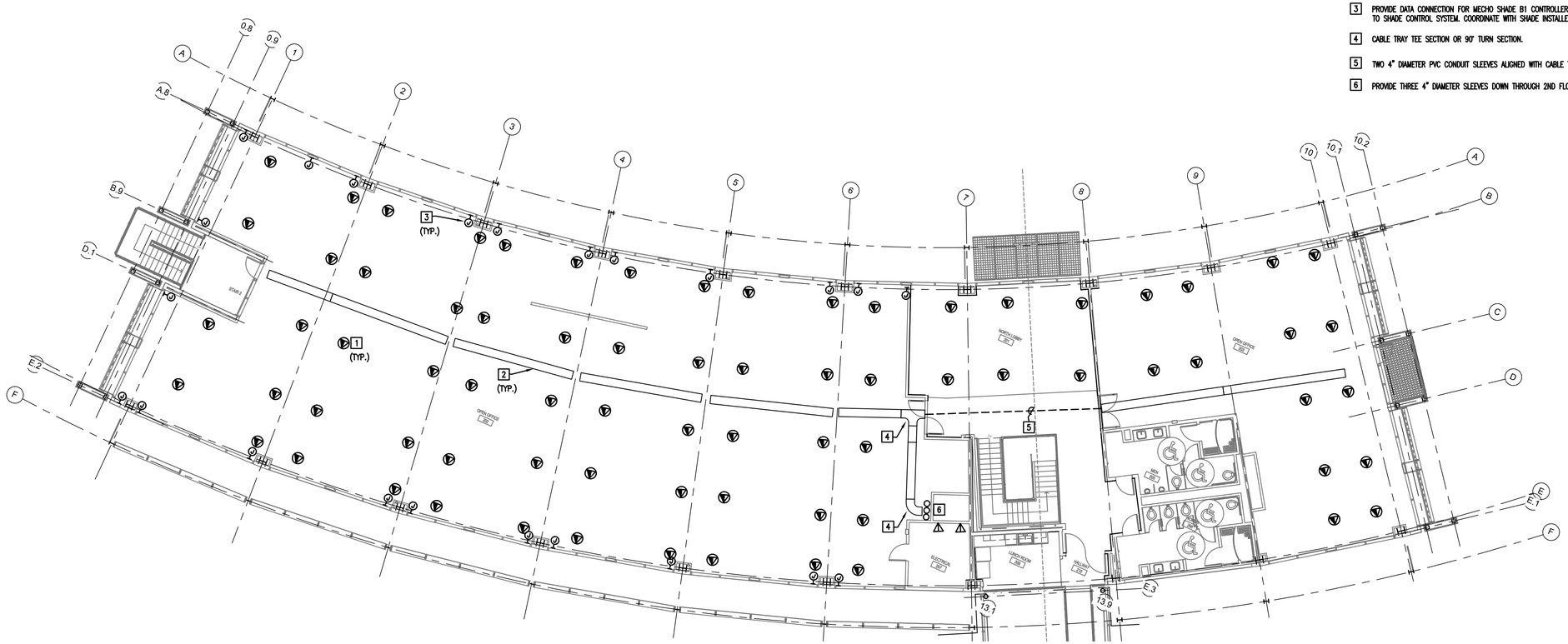

PROJECT STATUS

BID SET 04/27/09

ISSUE			
MARK	DATE	DESCRIPTION	INITIAL

KEY PLAN

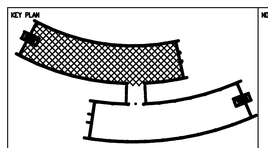

NORTH ARROW

3/32"=1' 0 8 16 32 48

		DATE
DRAWN	S. KANDA	
DESIGNED	N. ZECH	
CHECKED	D. KING	
PROJMGR	J. GRANT	
REQUESTOR	R. SCHULER	
RSGA		
SAFETY		
SUPERVISOR	S FRANKEL	

Ames Research Center
Moffet Field, California

N232 COLLABORATIVE SUPPORT FACILITY

SECOND FLOOR COMMUNICATIONS PLAN NORTH WING

SIZE	CAGE CODE		REV
D	25307	A232-0800- E521	
SCALE	INDEX	SHEET OF	

DWG: Q:\60046863 - NASA Ames CSF N232\500 CAD\E\Sheet\E521.dwg User: zechn
DATE: Apr 28, 2009 - 10:22:32 am Images:
Xrefs: AAFY02* ADBR-SHORT* AECOM02* hgrid

GENERAL NOTES:

1. SEE SHEET E001 AND E002 FOR SYMBOLS, ABBREVIATIONS AND GENERAL NOTES.

PLAN NOTES:

1. TELEPHONE/DATA TO BE INTEGRATED IN ACCESS BOX WITH POWER. SEE E411.
2. 4"X18" WIRE BASKET CABLE TRAY MOUNTED ON UNISTRUT CHANNELS. BUTT SPLICE TRAY AT COLUMN LINES AS SHOWN WITH MAXIMUM GAP OF 3". SEE DETAIL 1/E908.
3. PROVIDE DATA CONNECTION FOR MECHO SHADE B1 CONTROLLER OR APPROVED EQUAL TO SHADE CONTROL SYSTEM. COORDINATE WITH SHADE INSTALLER.
4. CABLE TRAY TEE SECTION.
5. PROVIDE THREE 4" DIAMETER SLEEVES DOWN THROUGH 2ND FLOOR SLAB.

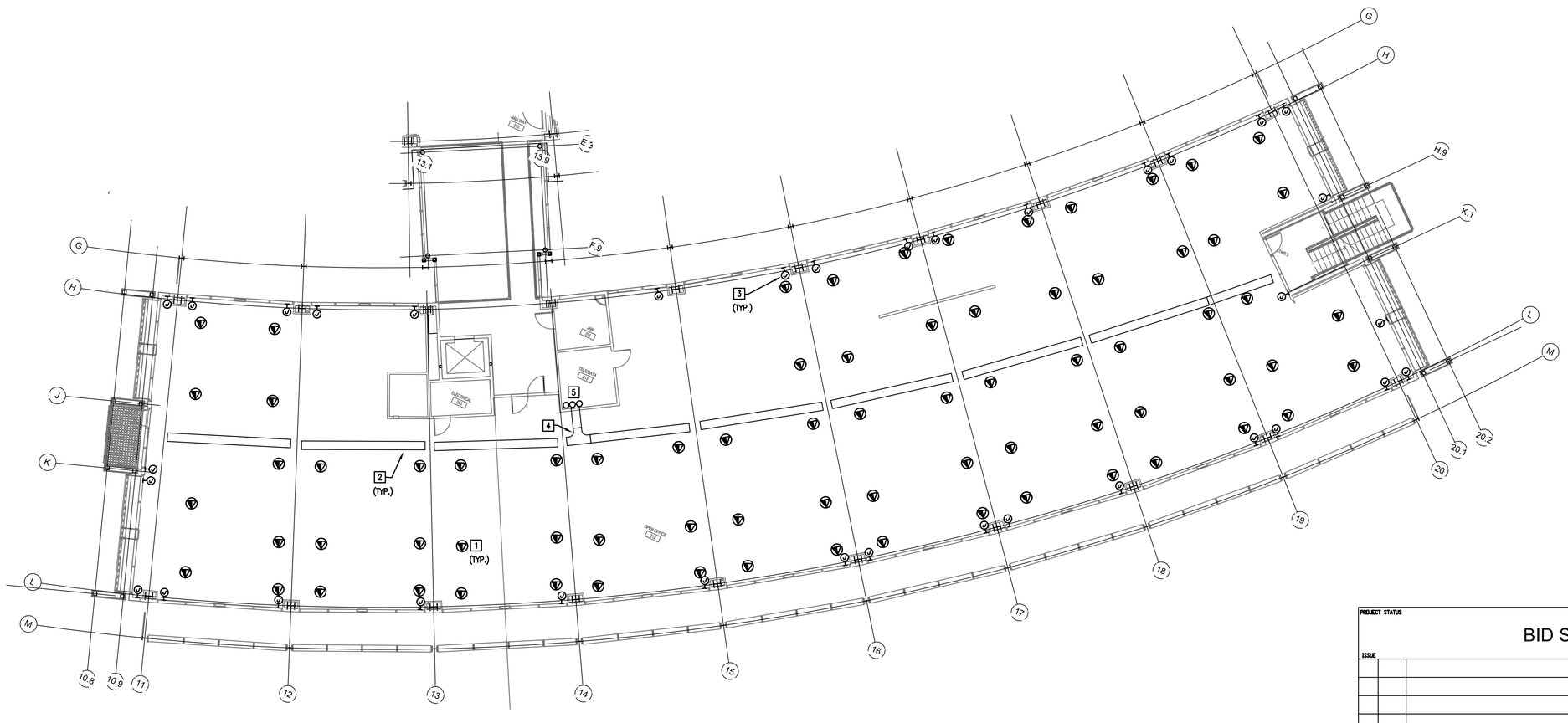

PROJECT STATUS

BID SET 04/27/09

ISSUE			
MARK	DATE	DESCRIPTION	INITIAL

KEY PLAN

NORTH ARROW

BLDG NORTH

TRUE NORTH

3/32"=1' 0 8 16 32 48

		DATE
DRAWN	S. KANDA	
DESIGNED	N. ZECH	
CHECKED	D. KING	
PRELIMER	J. GRANT	
REVIEWER	R. SCHULER	
RIGA		
SAFETY		
SUPERVISOR	S FRANKEL	

Ames Research Center
Moffet Field, California

N232 COLLABORATIVE SUPPORT FACILITY

SECOND FLOOR COMMUNICATIONS PLAN SOUTH WING

SIZE	CAGE CODE		REV
D	25307	A232-0800- E522	
SCALE		INDEX	SHEET OF

DWG: Q:\60046883 - NASA Ames CSF N232\300 CAD\E\Sheet\E522.dwg User: zechn
DATE: Apr 28, 2009 - 10:22:27 Images:
Xrefs: "AAFF02" "R20R-SHORT" "XCOM02" "agrid"

GENERAL NOTES:

1. SEE SHEET E001 AND E002 FOR SYMBOLS, ABBREVIATIONS AND GENERAL NOTES.
2. POWER TRANSFER HINGES SHALL BE MANUFACTURED BY MCKINNEY OR HAGER; RATED AT MINIMUM 1 AMP CONTINOUS AND 16 AMPS INTERMITTENT.
3. ARMORED DOOR CORDS SHALL BE SCHLAGE #798-18, MOUNT DOOR CORD NEAR UPPER HINGE OF THE DOOR TO AVOID ACCIDENTAL DAMAGE.

PLAN NOTES:

1. PROVIDE 2" CONDUIT PENETRATION TO RAISED FLOOR OF SECOND LEVEL FOR CCTV CABLES. VERFIY LOCATION WITH CCTV INSTALLER.
2. PROVIDE AND INSTALL 12"X12"X5" NEMA 1 PULLBOX SCREW COVER FLUSH MOUNT ON NEAREST GYPSUM BOARD WALL, MINIMUM 10'-6" AFF. RUN (1) 3/4" EMPTY CONDUIT WITH PULL ROPE TO ROOM 107 NEAR L1NA PANEL. RUN (1) 1" EMPTY CONDUIT WITH PULL ROPE. TO ROOM 108. SEE 3/E908 FOR DETAILS.
3. PROVIDE AND INSTALL DOOR OPENER POWER SUPPLY WITH ENCLOSURE. RUN (1) 3/4" CONDUIT ROOM 107 AND (1) 1" EMPTY CONDUIT TO ROOM 108. SEE 5/E908 AND 10/A712 FOR DETAILS. COORDINATE WORK WITH SECURITY INSTALLER.
4. PROVIDE AND INSTALL ADA ACTUATOR 3/4" CONDUIT TO DOOR OPENER POWER SUPPLY. SEE KEYNOTE #3. SEE ARCHITECTURAL DRAWING A211 FOR EXACT LOCATION OF ADA BOLLARD AND ACTUATOR. SEE 4/E908.

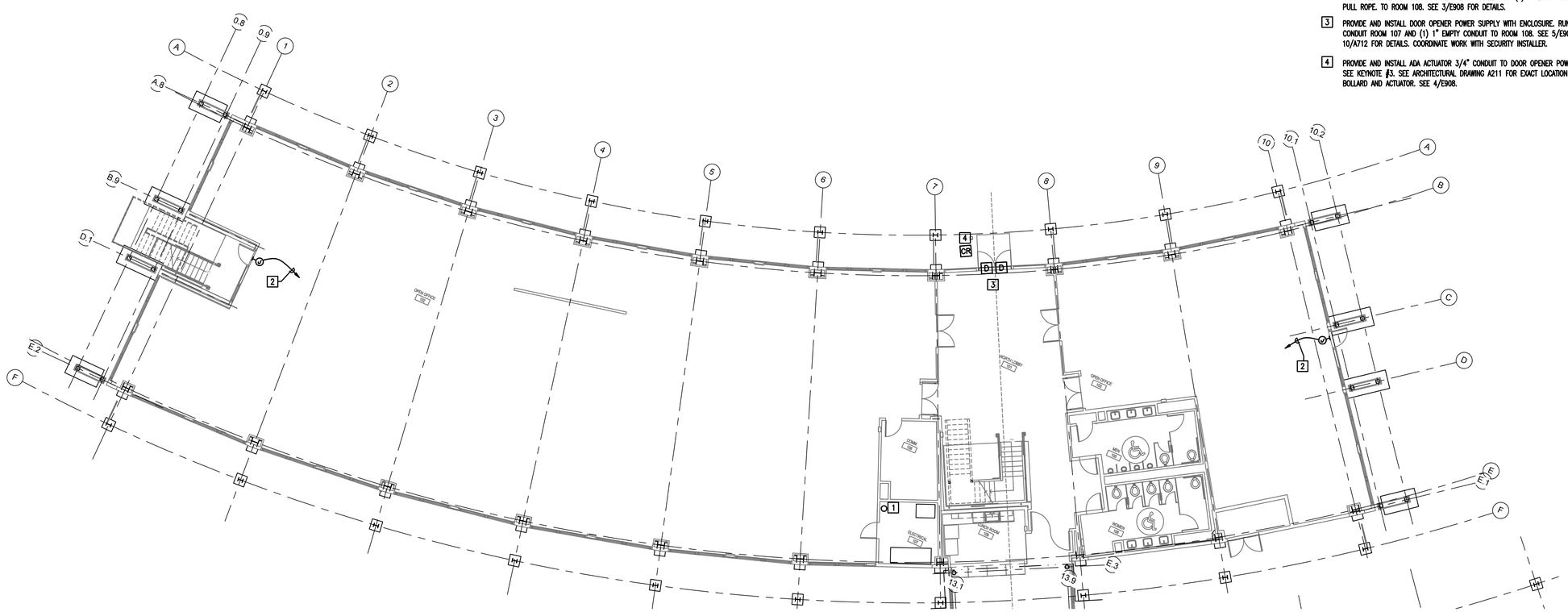

KEY PLAN

NORTH ARROW

BLDG NORTH

TRUE NORTH

3/32"=1' 0 8 16 32 48

PROJECT STATUS			
BID SET 04/27/09			
ISSUE			
MARK	DATE	DESCRIPTION	INITIAL

DRAWN	S. KANDA	DATE
DESIGNED	N. ZECH	DATE
CHECKED	D. KING	DATE
PROJMGR	J. GRANT	DATE
REQUESTOR	R. SCHULER	DATE
RSGA		DATE
SAFETY		DATE
SUPERVISOR	S FRANKEL	DATE

Ames Research Center
Moffet Field, California

N232 COLLABORATIVE SUPPORT FACILITY

FIRST FLOOR SECURITY SYSTEMS PLAN NORTH WING

SIZE	CAGE CODE		REV
D	25307	A232-0800- E611	
SCALE		INDEX	SHEET OF

DWG: Q:\60046863 - NASA Ames CSF N232\500 CAD\E\Sheet\E611.dwg User: zechn
DATE: Apr 28, 2009 - 10:22:22 am Images:
Xrefs: "AFFOI" "ARCOI" "R2BR-SHORT" "XESYS01" "xgrid

GENERAL NOTES:

1. SEE SHEET E001 AND E002 FOR SYMBOLS, ABBREVIATIONS AND GENERAL NOTES.
2. POWER TRANSFER HINGES SHALL BE MANUFACTURED BY MCKINNEY OR HAGER; RATED AT MINIMUM 1 AMP CONTINOUS AND 16 AMPS INTERMITTENT.
3. ARMORED DOOR CORDS SHALL BE SCHLAGE #798-18, MOUNT DOOR CORD NEAR UPPER HINGE OF THE DOOR TO AVOID ACCIDENTAL DAMAGE.

PLAN NOTES:

1 PROVIDE 2" CONDUIT PENETRATION TO RAISED FLOOR OF SECOND LEVEL FOR CCTV CABLES. VERFIY LOCATION WITH CCTV INSTALLER.

2 PROVIDE AND INSTALL 12"X12"X5" NEMA 1 PULLBOX SCREW COVER FLUSH MOUNT ON NEAREST GYPSUM BOARD WALL, MINIMUM 10'-6" AFF. RUN (1) 3/4" EMPTY CONDUIT WITH PULL ROPE TO ROOM 107 NEAR L1NA PANEL. RUN (1) 1" EMPTY CONDUIT WITH PULL ROPE. TO ROOM 108. SEE 3/E908 FOR DETAILS.

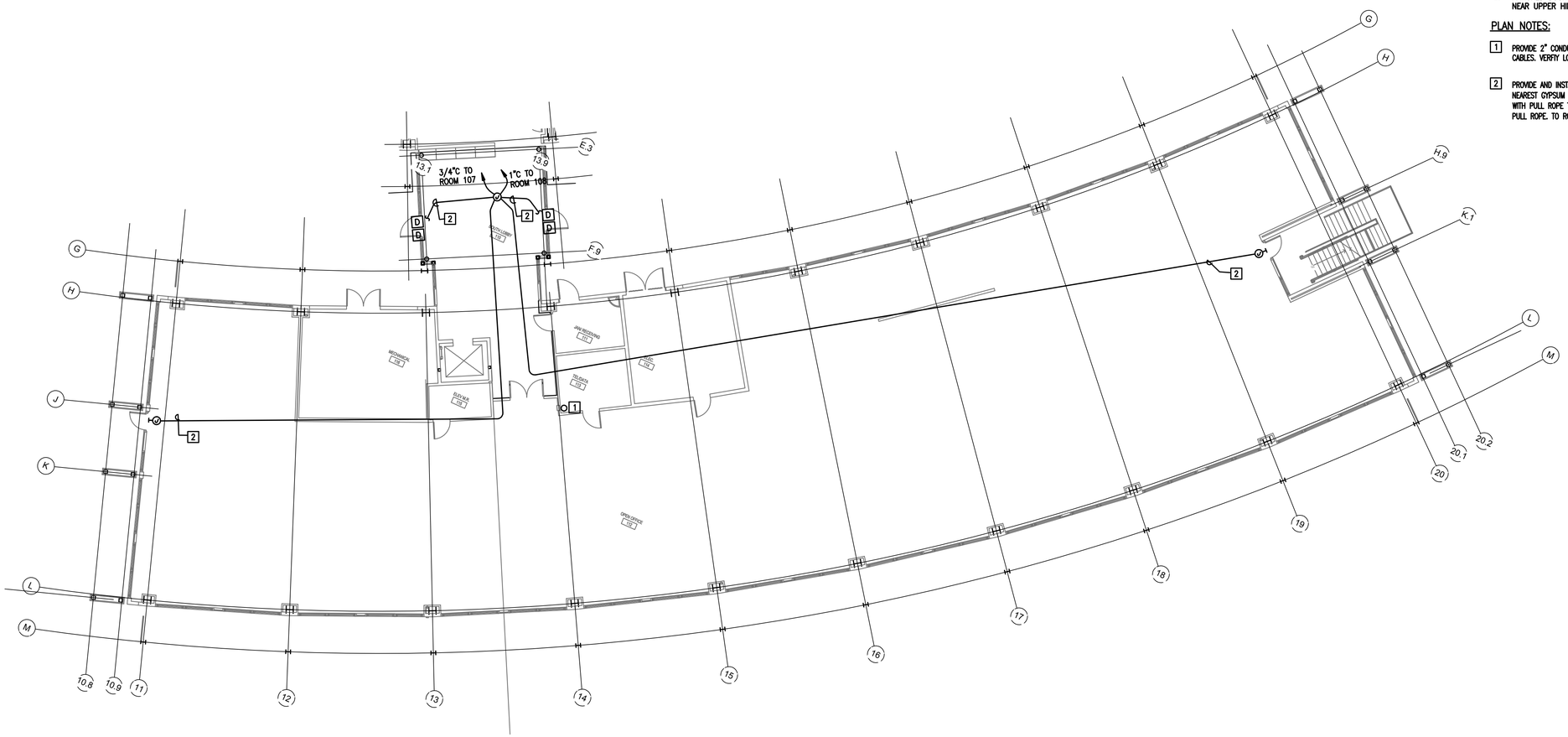

KEY PLAN

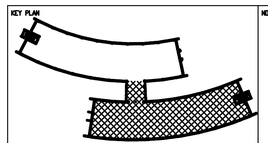

NORTH ARROW

3/32"=1' 0 8 16 32 48

PROJECT STATUS

BID SET 04/27/09

ISSUE			
MARK	DATE	DESCRIPTION	INITIAL

DRAWN	S. KANDA	DATE
DESIGNED	N. ZECH	DATE
CHECKED	D. KING	DATE
PRIJMER	J. GRANT	DATE
REVIEWER	R. SCHULER	DATE
RLGA		DATE
SAFETY		DATE
SUPERVISOR	S FRANKEL	DATE

Ames Research Center
Moffet Field, California

N232 COLLABORATIVE SUPPORT FACILITY

FIRST FLOOR SECURITY SYSTEMS PLAN SOUTH WING

SIZE	CAGE CODE			REV
D	25307	A232-0800-	E612	
SCALE		INDEX	SHEET OF	

DWG: G:\60048663 - NASA Ames CSF N232\300 CAD\E\Sheet\E612.dwg User: zechn
DATE: Apr 23, 2009 - 17:22:16 am Images:
Xrefs: "xAFP01" "xARC01" "xBDR-SHORT" "xCSTS01" "xgrid

GENERAL NOTES:

1. SEE SHEET E001 AND E002 FOR SYMBOLS, ABBREVIATIONS AND GENERAL NOTES.
2. POWER TRANSFER HINGES SHALL BE MANUFACTURED BY MCKINNEY OR HAGER; RATED AT MINIMUM 1 AMP CONTINOUS AND 16 AMPS INTERMITTENT.
3. ARMORED DOOR CORDS SHALL BE SCHLAGE #798-18, MOUNT DOOR CORD NEAR UPPER HINGE OF THE DOOR TO AVOID ACCIDENTAL DAMAGE.

PLAN NOTES:

1. PROVIDE 2" CONDUIT PENETRATION TO RAISED FLOOR OF SECOND LEVEL FOR CCTV CABLES. VERFIY LOCATION WITH CCTV INSTALLER.

2. PROVIDE AND INSTALL 12"X12"X5" NEMA 1 PULLBOX SCREW COVER FLUSH MOUNT ON NEAREST GYPSUM BOARD WALL, MINIMUM 10'-6" AFF. RUN (1) 3/4" EMPTY CONDUIT WITH PULL ROPE TO ROOM 107 NEAR L1NA PANEL. RUN (1) 1" EMPTY CONDUIT WITH PULL ROPE. TO ROOM 108. SEE 3/E908 FOR DETAILS.

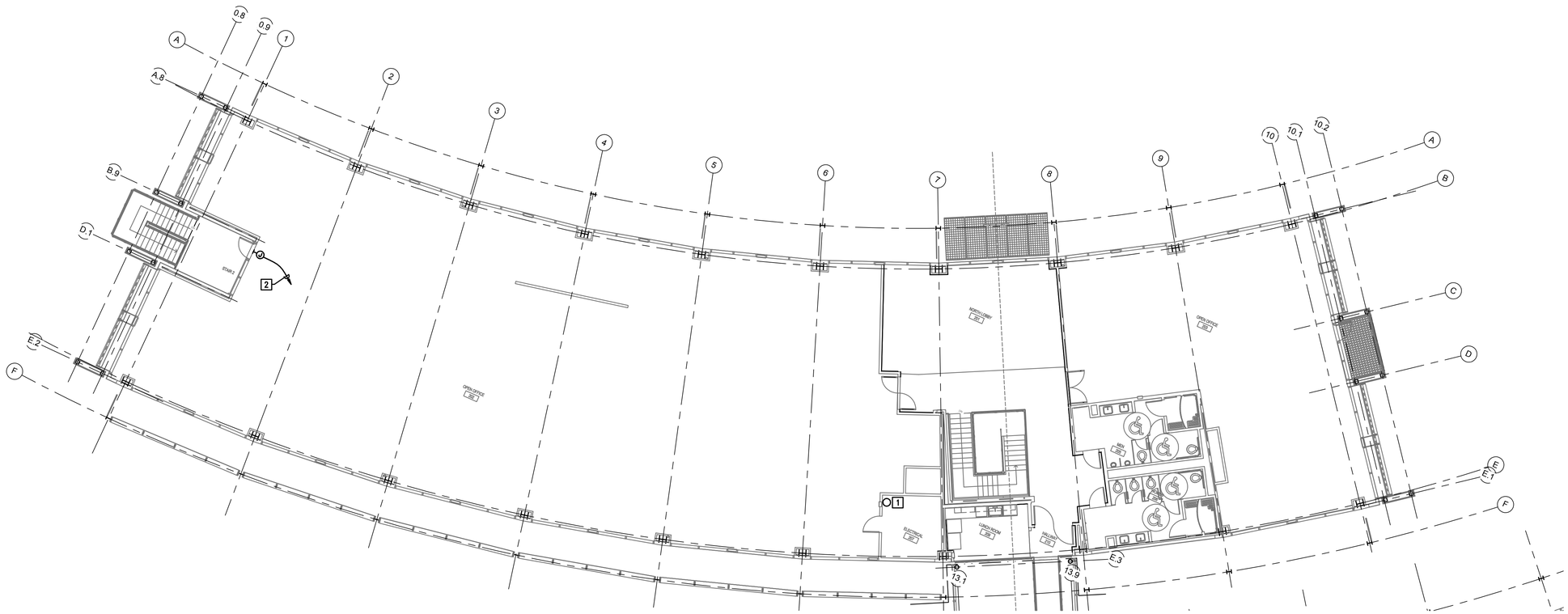

PROJECT STATUS

BID SET 04/27/09

ISSUE			
MARK	DATE	DESCRIPTION	INITIAL

KEY PLAN

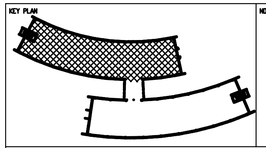

NORTH ARROW

3/32"=1' 0 8 16 32 48

		DATE
DRAWN	S. KANDA	
DESIGNED	N. ZECH	
CHECKED	D. KING	
PRELIMGR	J. GRANT	
REQUESTOR	R. SCHULER	
RIGA		
SAFETY		
SUPERVISOR	S FRANKEL	

Ames Research Center
Moffet Field, California

N232 COLLABORATIVE SUPPORT FACILITY

SECOND FLOOR SECURITY SYSTEMS PLAN NORTH WING

SIZE	CAGE CODE		REV
D	25307	A232-0800- E621	
SCALE		INDEX	SHEET OF

DWG: Q:\60048683_ - NASA Ames CSF N232\500 CAD\E\Sheet\E621.dwg User: zechn
DATE: Apr 28, 2009 - 10:22:10 am Images:
Xrefs: "xAFY02" "NBBR-SHORT" "xCSTS02" "xgrid"

GENERAL NOTES:

1. SEE SHEET E001 AND E002 FOR SYMBOLS, ABBREVIATIONS AND GENERAL NOTES.
2. POWER TRANSFER HINGES SHALL BE MANUFACTURED BY MCKINNEY OR HAGER; RATED AT MINIMUM 1 AMP CONTINOUS AND 16 AMPS INTERMITTENT.
3. ARMORED DOOR CORDS SHALL BE SCHLAGE #798-18, MOUNT DOOR CORD NEAR UPPER HINGE OF THE DOOR TO AVOID ACCIDENTAL DAMAGE.

PLAN NOTES:

1. PROVIDE 2" CONDUIT PENETRATION TO RAISED FLOOR OF SECOND LEVEL FOR CCTV CABLES. VERFIY LOCATION WITH CCTV INSTALLER.
2. PROVIDE AND INSTALL 12"X12"X5" NEMA 1 PULLBOX SCREW COVER FLUSH MOUNT ON NEAREST GYPSUM BOARD WALL, MINIMUM 10'-6" AFF. RUN (1) 3/4" EMPTY CONDUIT WITH PULL ROPE TO ROOM 107 NEAR L1NA PANEL. RUN (1) 1" EMPTY CONDUIT WITH PULL ROPE. TO ROOM 108. SEE 3/E908 FOR DETAILS.

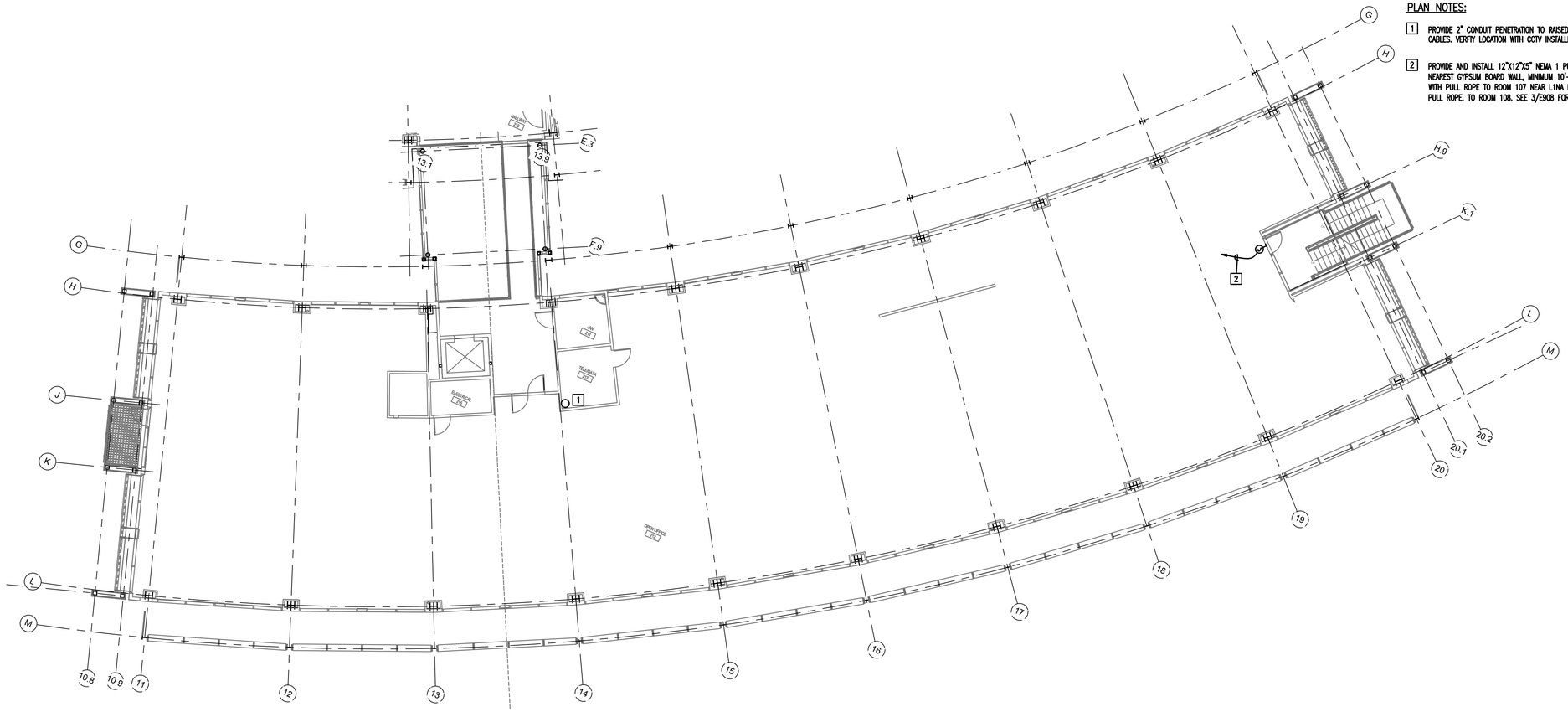

PROJECT STATUS			
BID SET 04/27/09			
ISSUE			
MARK	DATE	DESCRIPTION	INITIAL

KEY PLAN

NORTH ARROW

BLDG NORTH / TRUE NORTH

3/32"=1' 0 8 16 32 48

		DATE
DRAWN	S. KANDA	
DESIGNED	N. ZECH	
CHECKED	D. KING	
PROJMGR	J. GRANT	
REVIEWER	R. SCHULER	
RLGA		
SAFETY		
SUPERVISOR	S FRANKEL	

Ames Research Center
Moffet Field, California

N232 COLLABORATIVE SUPPORT FACILITY

SECOND FLOOR SECURITY SYSTEMS PLAN SOUTH WING

SIZE	CAGE CODE		REV
D	25307	A232-0800- E622	
SCALE		INDEX	SHEET OF

DWG: G:\60048863 - NASA Ames CSF N232\300 CAD\E\Sheet\E622.dwg User: zechn
DATE: Apr 28, 2009 - 10:20:15 am Images:
Xrefs: "xAFF02" "798R-SHORT" "A231S02" "xgrid

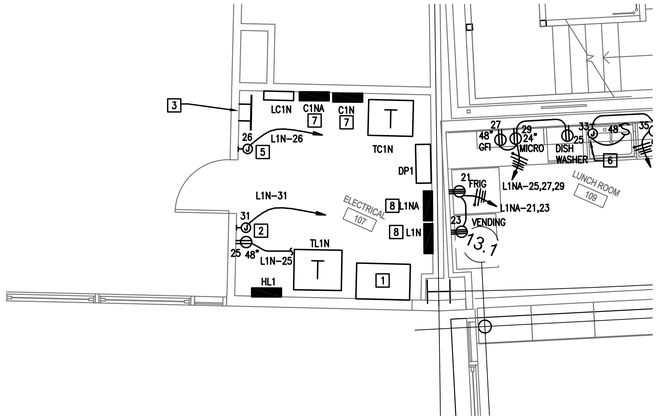

1 FIRST FLOOR NORTH WING ENLARGED POWER PLANS

E801 REF. SCALE: 1/4" = 1'-0"

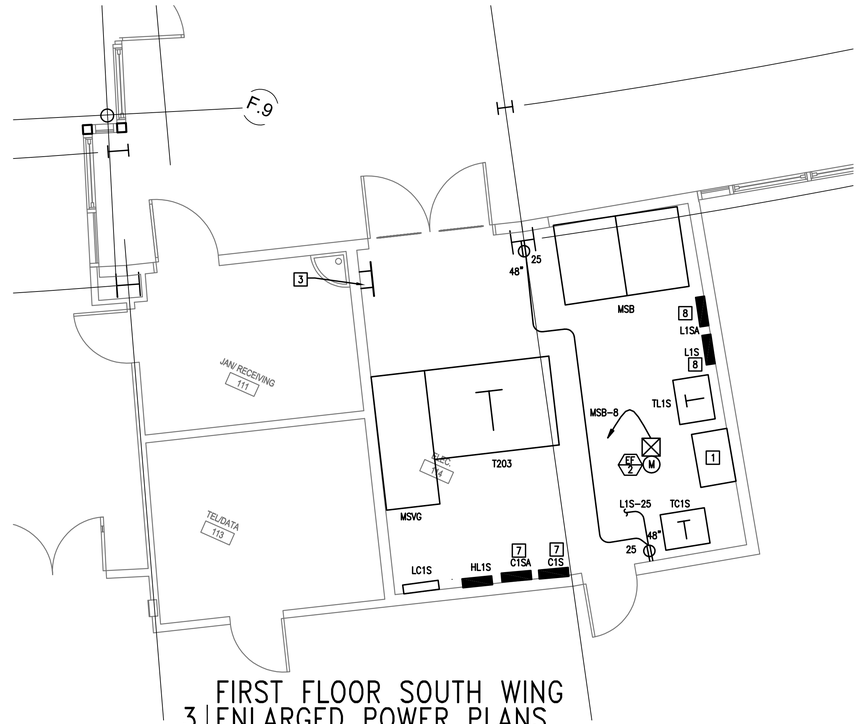

3 FIRST FLOOR SOUTH WING ENLARGED POWER PLANS

E801 REF. SCALE: 1/4" = 1'-0"

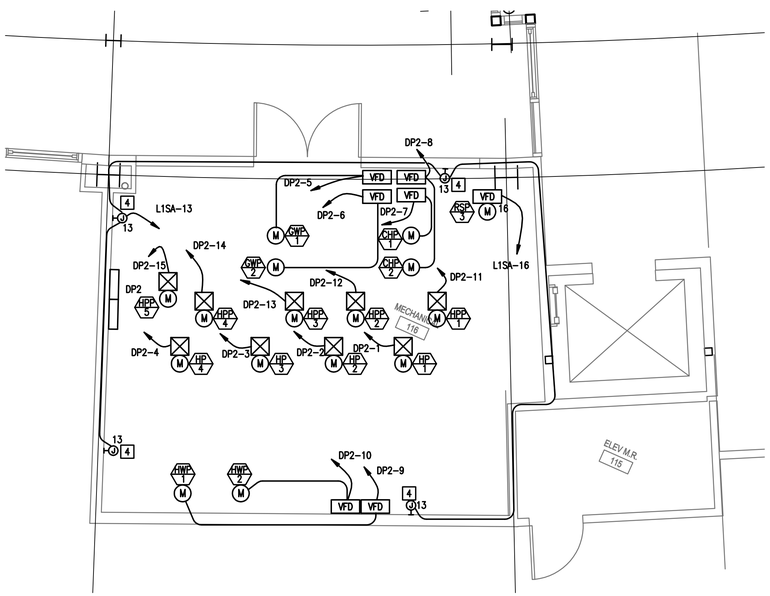

2 FIRST FLOOR SOUTH WING ENLARGED POWER PLANS

E801 REF. SCALE: 1/4" = 1'-0"

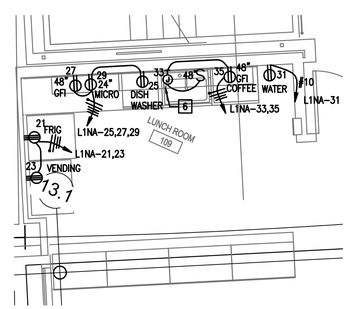

4 FIRST FLOOR NORTH WING ENLARGED POWER PLANS

E801 REF. SCALE: 1/4" = 1'-0"

GENERAL NOTES:

1. SEE SHEET E001 AND E002 FOR SYMBOLS, ABBREVIATIONS AND GENERAL NOTES.

PLAN NOTES:

1. PROVIDE 5KW LIGHTING INVERTER FOR INTERIOR EMERGENCY LIGHTING AND EXTERIOR LIGHTING. SEE E904 FOR OUTPUT BREAKERS.
2. PROVIDE POWER FOR FIRE ALARM SYSTEM. COORDINATE WITH FIRE ALARM INSTALLER.
3. GROUND BAR. COORDINATE LOCATION WITH EQUIPMENT. SEE 6/906.
4. PROVIDE 120V POWER FOR FMCS PANEL. SEE M113.
5. PROVIDE 120V POWER FOR FIRE ALARM TRANSCEIVER.
6. PROVIDE 120V POWER FOR GARABAGE DISPOSAL. COORDINATE LOCATION WITH INSTALLER.
7. FOR EVERY (3) CIRCUT BREAKER SPARES/SPACES PROVIDE A 1" CONDUIT FROM PANEL DOWN INTO SLAB AND TO OPEN OFFICE NEAREST TO PANEL FOR FUTURE CONNECTION IN RAISED FLOOR.
8. FOR EVERY (4) CIRCUT BREAKER SPARES/SPACES PROVIDE A 1" CONDUIT FROM PANEL DOWN INTO SLAB AND TO OPEN OFFICE NEAREST TO PANEL FOR FUTURE CONNECTION IN RAISED FLOOR.

PROJECT STATUS: BID SET 04/27/09

ISSUE			
MARK	DATE	DESCRIPTION	INITIAL

KEY PLAN

NORTH ARROW: BLDG NORTH, TRUE NORTH

1/4"=1' 0 2 4 8 12

		DATE
DRAWN	S. KANDA	
DESIGNED	N. ZECH	
CHECKED	D. KING	
PRIMER	J. GRANT	
REVIEWER	R. SCHULER	
FAGA		
SAFETY		
SUPERVISOR	S FRANKEL	

Ames Research Center
Moffet Field, California

N232 COLLABORATIVE SUPPORT FACILITY
FIRST FLOOR
ENLARGED POWER PLANS

SIZE	CAGE CODE		REV
D	25307	A232-0800- E801	
SCALE		INDEX	SHEET OF

DWG: Q:\60048683 - NASA Ames CSF N232\300 CAD\E\Sheet\E801.dwg User: zechn
DATE: Apr 20, 2009 - 07:55 am Images:
Xrefs: XAPF01 7680R-SHORT XZPHE01 XELQP01

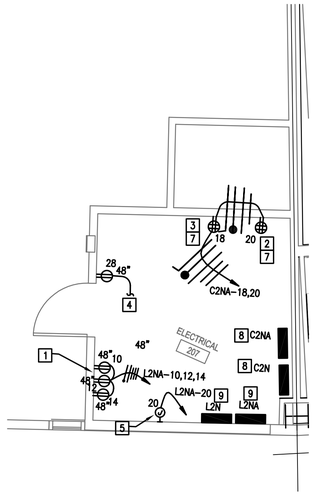

1 SECOND FLOOR NORTH WING ENLARGED POWER PLANS

E802 | REF. | SCALE: 1/4" = 1'-0"

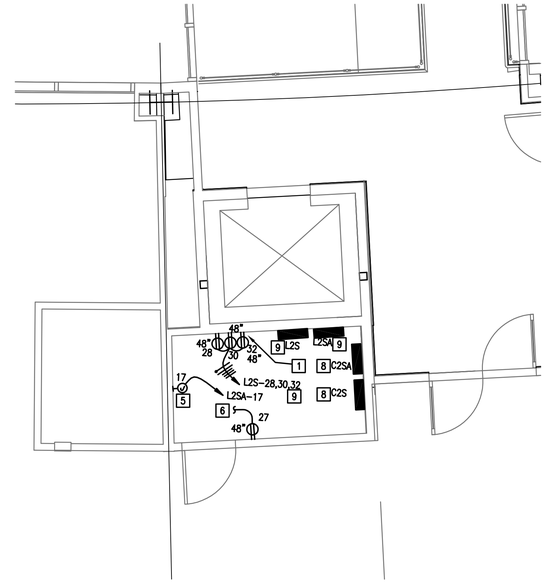

2 SECOND FLOOR SOUTH WING ENLARGED POWER PLANS

E802 | REF. | SCALE: 1/4" = 1'-0"

GENERAL NOTES:

1. SEE SHEET E001 AND E002 FOR SYMBOLS, ABBREVIATIONS AND GENERAL NOTES.

PLAN NOTES:

1. PROVIDE 36"H X 30"W X 19"D MINIMUM CORROSIVE RESISTANT WALL MOUNT STEEL CABINET WITH LOUVERED SIDE PANELS, ROOF MOUNTED FAN AT NO LESS THAN 250CFM AND WITH CABINET GROUND LUG FOR MOTORIZED WINDOW POWER SUPPLIES.
2. LOCATION FOR LUTRON QUANTUM CONTROL SYSTEM.
3. LOCATION FOR FOR MECHO SHADES SOLAR TRAC SYSTEM.
4. SEE E421 FOR CONTINUATION OF CIRCUIT.
5. PROVIDE 120V POWER FOR FMCS PANEL. SEE M113.
6. SEE E422 FOR CONTINUATION OF CIRCUIT.
7. PROVIDE UPRIGHT STEEL CABINET WITH LOUVERED SIDE PANELS FOR SERVER, KEYBOARD AND MONITOR. PROVIDE CORROSIVE RESISTANT FLOOR MOUNTED CABINET WITH SLIDE OUT TRAY FOR KEYBOARD.
8. FOR EVERY (3) CIRCUT BREAKER SPARES/SPACES PROVIDE A 1" CONDUIT FROM PANEL DOWN INTO SLAB AND TO OPEN OFFICE NEAREST TO PANEL FOR FUTURE CONNECTION IN RAISED FLOOR.
9. FOR EVERY (4) CIRCUT BREAKER SPARES/SPACES PROVIDE A 1" CONDUIT FROM PANEL DOWN INTO SLAB AND TO OPEN OFFICE NEAREST TO PANEL FOR FUTURE CONNECTION IN RAISED FLOOR.

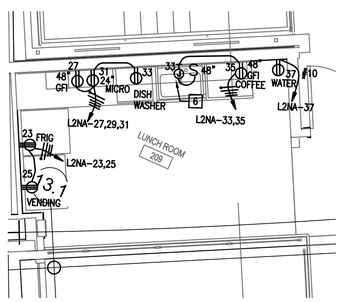

3 SECOND FLOOR NORTH WING ENLARGED POWER PLANS

E802 | REF. | SCALE: 1/4" = 1'-0"

PROJECT STATUS

BID SET 04/27/09

ISSUE			
MARK	DATE	DESCRIPTION	INITIAL

KEY PLAN

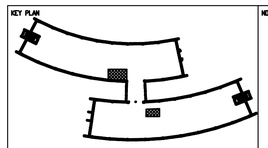

NORTH ARROW

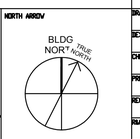

1/4"=1' 0 2 4 8 12

DRAWN	S. KANDA	DATE
DESIGNED	N. ZECH	DATE
CHECKED	D. KING	DATE
PRELIMER	J. GRANT	DATE
REQUESTOR	R. SCHULER	DATE
RLGA		DATE
SAFETY		DATE
SUPERVISOR	S FRANKEL	DATE

Ames Research Center
Moffet Field, California

N232 COLLABORATIVE SUPPORT FACILITY
SECOND FLOOR
ENLARGED POWER PLANS

SIZE	CAGE CODE			REV
D	25307	A232-0800-	E802	
SCALE		INDEX	SHEET OF	

DWG: G:\60048883 - NASA Ames CSF N232\300 CAD\E\Sheet\E802.dwg User: zechn
DATE: Apr 28, 2009 - 10:21:49 am Images:
Xrefs: "XAFP02" "XDBR-SHORT" "XEQP02"

PANEL : HLS

Location: Elect Rm 114
Main: LUGS ONLY
Bus Rating Amps 100
Volts: 480 / 277
Phase/Wires: 3 / 4
Mounting: SURFACE

LOAD INFORMATION			VOLTAMPS			CB RATING/POLES							VOLTAMPS			LOAD INFORMATION		
LOAD	Note	Type	PH-A	PH-B	PH-C	Ckt	P	CB	PH	CB	P	Ckt	PH-A	PH-B	PH-C	Type	Note	LOAD
OPEN OFFICE 112 LTGS		L	1,600			1	1	20	A	20	1	2	2,711			L		OPEN OFFICE 112 LTGS
LIFE SAFETY INVERTER		L		5,300		3	1	30	B	20	1	4		2,800		L		OPEN OFFICE 212 LTGS
CENTRAL AISLE OPEN OFFICE 112 LTGS		L			280	5	1	20	C	20	1	6			2,600	L		OPEN OFFICE 212 LTGS
RM 111, RM 113, RM 114, RM116		L	649			7	1	20	A	20	1	8	60			L		ELEVATOR ROOM
CENTRAL AISLE OPEN OFFICE 212 LTGS		L		300		9	1	20	B	20	1	10						SPARE
SPARE						11	1	20	C	20	1	12						SPARE
SPARE						13	1	20	A			14						SPACE
SPARE						15	1	20	B			16						SPACE
SPACE						17			C			18						SPACE
SPACE						19			A			20						SPACE
SPACE						21			B			22						SPACE
SPACE						23			C			24						SPACE
SPACE						25			A			26						SPACE
SPACE						27			B			28						SPACE
SPACE						29			C			30						SPACE
			2,249	5,600	280			A	B	C			2,771	2,800	2,600			
TOTAL/PHASE:								5,020	8,400	2,880								

Load Breakdown		DF	VAxDF	VA
CONTINUOUS LOAD	X	1.25	20,375	16,300
LARGEST MOTOR	X	1.25	0	0
RECEPTACLE LOAD	X	NEC	0	0
DWELLING TYPE LOADS	X	1.00	0	0
OTHER LOADS	X	1.00	0	0
SUM			20,375	16,300
CALC'D AMPERES			24.5	

NOTES	
1	
2	
3	
4	
5	
6	
7	

Load Types	
L	LIGHTING LOAD
R	RECEPTACLE LOAD
M	LARGEST MOTOR
D	DWELLING/RESIDENTIAL LOAD
	##FILENAME##

PANEL : L2S

Location: Elect Rm 214
Main: 200 A
Bus Rating Amps 225
Volts: 208 / 120
Phase/Wires: 3 / 4
Mounting: SURFACE

LOAD INFORMATION			VOLTAMPS			CB RATING/POLES							VOLTAMPS			LOAD INFORMATION		
LOAD	Note	Type	PH-A	PH-B	PH-C	Ckt	P	CB	PH	CB	P	Ckt	PH-A	PH-B	PH-C	Type	Note	LOAD
OPEN OFFICE 212 RECEPTACLES		R	1,440			1	1	20	A	20	1	2	1,620			R		OPEN OFFICE 212 RECEPTACLES
OPEN OFFICE 212 RECEPTACLES		R		1,080		3	1	20	B	20	1	4		1,440		R		OPEN OFFICE 212 RECEPTACLES
OPEN OFFICE 212 RECEPTACLES		R			1,440	5	1	20	C	20	1	6			1,440	R		OPEN OFFICE 212 RECEPTACLES
OPEN OFFICE 212 RECEPTACLES		R	1,440			7	1	20	A	20	1	8	1,620			R		OPEN OFFICE 212 RECEPTACLES
OPEN OFFICE 212 RECEPTACLES		R		900		9	1	20	B	20	1	10		1,440		R		OPEN OFFICE 212 RECEPTACLES
OPEN OFFICE 212 RECEPTACLES		R			1,440	11	1	20	C	20	1	12			1,620	R		OPEN OFFICE 212 RECEPTACLES
OPEN OFFICE 212 RECEPTACLES		R	900			13	1	20	A	20	1	14	1,440			R		OPEN OFFICE 212 RECEPTACLES
OPEN OFFICE 212 RECEPTACLES		R		1,440		15	1	20	B	20	1	16		720		R		OPEN OFFICE 212 RECEPTACLES
OPEN OFFICE 212 RECEPTACLES		R			1,260	17	1	20	C	20	1	18			720	R		OPEN OFFICE 212 RECEPTACLES
OPEN OFFICE 212 RECEPTACLES		R	1,440			19	1	20	A	20	1	20	720			R		OPEN OFFICE 212 RECEPTACLES
OPEN OFFICE 212 RECEPTACLES		R		1,080		21	1	20	B	20	1	22		1,260		R		OPEN OFFICE 212 RECEPTACLES
OPEN OFFICE 212 RECEPTACLES		R			1,440	23	1	20	C	20	1	24			1,080	R		OPEN OFFICE 212 RECEPTACLES
OPEN OFFICE 212 RECEPTACLES		R	1,080			25	1	20	A	20	1	26	770			M		EF-3 & EF-5 ON ROOF
OPEN OFFICE 212 RECEPTACLES		R		1,080		27	1	20	B	20	1	28		1,260				MOTORIZED WINDOW POWER SUPPLY
OPEN OFFICE 212 RECEPTACLES		R			180	29	1	20	C	20	1	30			1,260			MOTORIZED WINDOW POWER SUPPLY
OPEN OFFICE 212 RECEPTACLES		R	180			31	1	20	A	20	1	32	1,260					MOTORIZED WINDOW POWER SUPPLY
OPEN OFFICE 212 RECEPTACLES		R		180		33	1	20	B	20	1	34						SPARE
SPARE						35	1	20	C	20	1	36						SPARE
L2SA			6,384			37	3	100	A			38						SPACE
L2SA				6,384		39	–	100	B			40						SPACE
L2SA					6,384	41	–	100	C			42						SPACE
			12,864	12,144	12,144			A	B	C			7,430	6,120	6,120			
TOTAL/PHASE:								20,294	18,264	18,264								

Load Breakdown		DF	VAxDF	VA
CONTINUOUS LOAD	X	1.25	0	0
LARGEST MOTOR	X	1.25	963	770
RECEPTACLE LOAD	X	NEC	21,560	33,120
DWELLING TYPE LOADS	X	1.00	0	0
OTHER LOADS	X	1.00	22,932	22,932
SUM			45,455	56,822
CALC'D AMPERES			126.2	

NOTES	
1	
2	
3	
4	
5	
6	
7	

Load Types	
L	LIGHTING LOAD
R	RECEPTACLE LOAD
M	LARGEST MOTOR
D	DWELLING/RESIDENTIAL LOAD
	#REF!

PANEL : HLN

Location: Elect Rm 110
Main: LUGS ONLY
Bus Rating Amps 100 A
Volts: 480 / 277
Phase/Wires: 3 / 4
Mounting: SURFACE

LOAD INFORMATION			VOLTAMPS			CB RATING/POLES							VOLTAMPS			LOAD INFORMATION		
LOAD	Note	Type	PH-A	PH-B	PH-C	Ckt	P	CB	PH	CB	P	Ckt	PH-A	PH-B	PH-C	Type	Note	LOAD
OPEN OFFICE 102 LIGHTS		L	3,324			1	1	20	A	20	1	2	1,000			L		RM 101, RM 103, RM 105, RM 106 LTGS
LIFE SAFETY INVERTER		L		5,300		3	1	30	B	20	1	4						SPARE
RM 107, RM 108, RM 109 LTGS		L			200	5	1	20	C	20	1	6			264	L		CENTRAL AISLE OPEN OFFICE 202LTGS
OPEN OFFICE 202 LIGHTS		L	2,468			7	1	20	A	20	1	8	66			L		CENTRAL AISLE OPEN OFFICE 202LTGS
LOBBY LTGS		L		1,100		9	1	20	B	20	1	10						SPARE
SPARE						11	1	20	C	20	1	12						SPARE
SPARE						13	1	20	A	20	1	14						SPARE
SPARE						15	1	20	B			16						SPACE
SPACE						17			C			18						SPACE
SPACE						19			A			20						SPACE
SPACE						21			B			22						SPACE
SPACE						23			C			24						SPACE
SPACE						25			A			26						SPACE
SPACE						27			B			28						SPACE
SPACE						29			C			30						SPACE
			5,792	6,400	200			A	B	C			1,066	0	264			
TOTAL/PHASE:								6,858	6,400	464								

Load Breakdown		DF	VAxDF	VA
CONTINUOUS LOAD	X	1.25	17,153	13,722
LARGEST MOTOR	X	1.25	0	0
RECEPTACLE LOAD	X	NEC	0	0
DWELLING TYPE LOADS	X	1.00	0	0
OTHER LOADS	X	1.00	0	0
SUM			17,153	13,722
CALC'D AMPERES			20.6	

NOTES	
1	
2	
3	
4	
5	
6	
7	

Load Types	
L	LIGHTING LOAD
R	RECEPTACLE LOAD
M	LARGEST MOTOR
D	DWELLING/RESIDENTIAL LOAD
	#REF!

PANEL : L2SA

Location: Elect Rm 214
Main: LUGS ONLY
Bus Rating Amps 100 A
Volts: 208 / 120
Phase/Wires: 3 / 4
Mounting: SURFACE

LOAD INFORMATION			VOLTAMPS			CB RATING/POLES							VOLTAMPS			LOAD INFORMATION		
LOAD	Note	Type	PH-A	PH-B	PH-C	Ckt	P	CB	PH	CB	P	Ckt	PH-A	PH-B	PH-C	Type	Note	LOAD
OPEN OFFICE 212 SHADES			1,548			1	1	20	A	20	1	2	1,548					OPEN OFFICE 212 SHADES
OPEN OFFICE 212 SHADES				1,032		3	1	20	B	20	1	4		1,548				OPEN OFFICE 212 SHADES
OPEN OFFICE 212 SHADES					1,548	5	1	20	C	20	1	6			1,548			OPEN OFFICE 212 SHADES
OPEN OFFICE 212 SHADES			1,548			7	1	20	A	20	1	8	1,032					OPEN OFFICE 212 SHADES
OPEN OFFICE 212 SHADES				1,548		9	1	20	B	20	1	10		863				DAC-1
OPEN OFFICE 212 SHADES					1,548	11	1	20	C	20	2	12			760			DAC-3
OPEN OFFICE 212 SHADES			1,548			13	1	20	A	20	1	14	760					DAC-3
OPEN OFFICE 212 SHADES				1,032		15	1	20	B	20	1	16		400				FMCS FIELD PANELS
FMCS PANEL					300	17	1	20	C	20	1	18						SPARE
SPARE						19	1	20	A	20	1	20						SPARE
SPARE						21	1	20	B			22						SPACE
SPARE						23	1	20	C			24						SPACE
SPACE						25			A			26						SPACE
SPACE						27			B			28						SPACE
SPACE						29			C			30						SPACE
			4,644	3,612	3,396			A	B	C			3,340	2,811	2,308			
TOTAL/PHASE:								7,984	6,423	5,704								

Load Breakdown		DF	VAxDF	VA
CONTINUOUS LOAD	X	1.25	0	0
LARGEST MOTOR	X	1.25	0	0
RECEPTACLE LOAD	X	NEC	0	0
DWELLING TYPE LOADS	X	1.00	0	0
OTHER LOADS	X	1.00	20,111	20,111
SUM			20,111	20,111
CALC'D AMPERES			55.8	

NOTES	
1	
2	
3	
4	
5	
6	
7	

Load Types	
L	LIGHTING LOAD
R	RECEPTACLE LOAD
M	LARGEST MOTOR
D	DWELLING/RESIDENTIAL LOAD
	#REF!

PANEL : L2N

Location: Elect Rm 114
Main: 200 A
Bus Rating Amps 225
Volts: 208 / 120
Phase/Wires: 3 / 4
Mounting: SURFACE

LOAD INFORMATION			VOLTAMPS			CB RATING/POLES							VOLTAMPS			LOAD INFORMATION		
LOAD	Note	Type	PH-A	PH-B	PH-C	Ckt	P	CB	PH	CB	P	Ckt	PH-A	PH-B	PH-C	Type	Note	LOAD
OPEN OFFICE 202 RECEPTACLE		R	1,620			1	1	20	A	20	1	2	1,440			R		OPEN OFFICE 202 RECEPTACLE
OPEN OFFICE 202 RECEPTACLE		R		1,440		3	1	20	B	20	1	4		1,440		R		OPEN OFFICE 202 RECEPTACLE
OPEN OFFICE 202 RECEPTACLE		R			1,440	5	1	20	C	20	1	6			1,620	R		OPEN OFFICE 202 RECEPTACLE
OPEN OFFICE 202 RECEPTACLE		R	1,620			7	1	20	A	20	1	8	1,080			R		OPEN OFFICE 202 RECEPTACLE
OPEN OFFICE 202 RECEPTACLE		R		1,440		9	1	20	B	20	1	10		720		R		OPEN OFFICE 202 RECEPTACLE
OPEN OFFICE 202 RECEPTACLE		R			1,260	11	1	20	C	20	1	12			720	R		OPEN OFFICE 202 RECEPTACLE
OPEN OFFICE 202 RECEPTACLE		R	1,440			13	1	20	A	20	1	14	720			R		OPEN OFFICE 202 RECEPTACLE
OPEN OFFICE 202 RECEPTACLE		R		1,620		15	1	20	B	20	1	16		1,440		R		OPEN OFFICE 202 RECEPTACLE
OPEN OFFICE 202 RECEPTACLE		R			720	17	1	20	C	20	1	18			720	R		OPEN OFFICE 202 RECEPTACLE
OPEN OFFICE 202 RECEPTACLE		R	1,080			19	1	20	A	20	1	20	900			R		OPEN OFFICE 202 RECEPTACLE
OPEN OFFICE 202 RECEPTACLE		R		720		21	1	20	B	20	1	22		900		R		OPEN OFFICE 202 RECEPTACLE
OPEN OFFICE 202 RECEPTACLE		R			1,080	23	1	20	C	20	1	24			720	R		OPEN OFFICE 202 RECEPTACLE
OPEN OFFICE 202 RECEPTACLE		R	180			25	1	20	A	20	1	26	720			R		OPEN OFFICE 202 RECEPTACLE
OPEN OFFICE 202 RECEPTACLE		R		180		27	1	20	B	20	1	28		900		R		OPEN OFFICE 202 RECEPTACLE
OPEN OFFICE 202 RECEPTACLE		R			180	29	1	20	C	20	1	30			900	R		OPEN OFFICE 202 RECEPTACLE
OPEN OFFICE 202 RECEPTACLE		R	180			31	1	20	A	20	1	32						SPARE
OPEN OFFICE 202 RECEPTACLE		R		500		33	1	20	B	20	1	34						SPARE
OPEN OFFICE 202 RECEPTACLE		R			180	35	1	20	C	20	1	36						SPARE
OPEN OFFICE 202 RECEPTACLE		R	180			37	1	20	A	100	3	38	8,333					L2NA
OPEN OFFICE 202 RECEPTACLE		R		300		39	1	20	B	100	–	40		8,333				L2NA
SPARE						41	1	20	C	100	–	42			8,333			L2NA
			6,300	6,200	4,860			A	B	C			13,193	13,733	13,013			
TOTAL/PHASE:								19,493	19,933	17,873								

Load Breakdown		DF	VAxDF	VA
CONTINUOUS LOAD	X	1.25	0	0
LARGEST MOTOR	X	1.25	0	0
RECEPTACLE LOAD	X	NEC	21,150	32,300
DWELLING TYPE LOADS	X	1.00	0	0
OTHER LOADS	X	1.00	24,999	24,999
SUM			46,149	57,299
CALC'D AMPERES			128.1	

NOTES	
1	
2	
3	
4	
5	
6	
7	

Load Types	
L	LIGHTING LOAD
R	RECEPTACLE LOAD
M	LARGEST MOTOR
D	DWELLING/RESIDENTIAL LOAD
	##FILENAME##

PROJECT STATUS

BID SET 04/27/09

ISSUE			
MARK	DATE	DESCRIPTION	INITIAL

DRAWN	L. DICKENS	DATE
DESIGNED	N. ZECH	DATE
CHECKED	D. KING	DATE
PROJMGR	J. GRANT	DATE
REQUESTOR	R. SCHULER	DATE
FACM		DATE
SAFETY		DATE
SUPERVISOR	S FRANKEL	DATE

Ames Research Center
Moffet Field, California

N232 COLLABORATIVE SUPPORT FACILITY

PANEL SCHEDULES

SIZE	CAGE CODE		REV
D	25307	A232-0800- E901	
SCALE		INDEX	SHEET OF

DWG: Q:\60248683 – NASA Ames CSF N232\500 CAD\E\Sheet\E901.dwg User: zechn
DATE: Apr 28, 2009 – 10:57:34 am Images:
Xrefs: 7KBXR

PANEL : C1S	Location: Elect Rm 114 Main: 250 A	Bus Rating Amps 400 A	Volts: 208 / 120 Phase/Wires: 3 / 4	Mounting: SURFACE

LOAD INFORMATION			VOLTAMPS			CB RATING/POLES						VOLTAMPS					LOAD INFORMATION
LOAD	Note	Type	PH–A	PH–B	PH–C	Ckt	P	CB	PH	CB	P	Ckt	PH–A	PH–B	PH–C	Type	Note	LOAD
OPEN OFFICE 112 RECEPTACLES		R	1,000			1	1	20	A	20	1	2	500			R		OPEN OFFICE 112 RECEPTACLES
OPEN OFFICE 112 RECEPTACLES		R		1,000		3	1	20	B	20	1	4		500		R		OPEN OFFICE 112 RECEPTACLES
OPEN OFFICE 112 RECEPTACLES		R			1,000	5	1	20	C	20	1	6			1,000	R		OPEN OFFICE 112 RECEPTACLES
OPEN OFFICE 112 RECEPTACLES		R	1,000			7	1	20	A	20	1	8	500			R		OPEN OFFICE 112 RECEPTACLES
OPEN OFFICE 112 RECEPTACLES		R		500		9	1	20	B	20	1	10		500		R		OPEN OFFICE 112 RECEPTACLES
OPEN OFFICE 112 RECEPTACLES		R			500	11	1	20	C	20	1	12			1,000	R		OPEN OFFICE 112 RECEPTACLES
OPEN OFFICE 112 RECEPTACLES		R	500			13	1	20	A	20	1	14	1,000			R		OPEN OFFICE 112 RECEPTACLES
OPEN OFFICE 112 RECEPTACLES		R		500		15	1	20	B	20	1	16		500		R		OPEN OFFICE 112 RECEPTACLES
OPEN OFFICE 112 RECEPTACLES		R			1,000	17	1	20	C	20	1	18			500	R		OPEN OFFICE 112 RECEPTACLES
OPEN OFFICE 112 RECEPTACLES		R	500			19	1	20	A	20	1	20	1,000			R		OPEN OFFICE 112 RECEPTACLES
OPEN OFFICE 112 RECEPTACLES		R		1,000		21	1	20	B	20	1	22		1,000		R		OPEN OFFICE 112 RECEPTACLES
OPEN OFFICE 112 RECEPTACLES		R			500	23	1	20	C	20	1	24			500	R		OPEN OFFICE 112 RECEPTACLES
OPEN OFFICE 112 RECEPTACLES		R	500			25	1	20	A	20	1	26	1,000			R		OPEN OFFICE 112 RECEPTACLES
OPEN OFFICE 112 RECEPTACLES		R		500		27	1	20	B	20	1	28		1,000		R		OPEN OFFICE 112 RECEPTACLES
OPEN OFFICE 112 RECEPTACLES		R			500	29	1	20	C	20	1	30			1,000	R		OPEN OFFICE 112 RECEPTACLES
OPEN OFFICE 112 RECEPTACLES		R	500			31	1	20	A	20	1	32	1,000			R		OPEN OFFICE 112 RECEPTACLES
SPARE						33	1	20	B	20	1	34						SPARE
SPARE						35	1	20	C	20	1	36						SPARE
C1SA			4,166			37	3	100	A	175	3	38	10,000					C2S
C1SA				4,166		39	–	100	B	175	–	40		10,000				C2S
C1SA					4,166	41	–	100	C	175	–	42			10,000			C2S
			8,166	7,666	7,666			A	B	C			15,000	13,500	14,000			
TOTAL/PHASE:								23,166	21,166	21,666								

Load Breakdown		DF	VAxDF	VA
CONTINUOUS LOAD	X	1.25	0	0
LARGEST MOTOR	X	1.25	0	0
RECEPTACLE LOAD	X	NEC	16,750	23,500
DWELLING TYPE LOADS	X	1.00	0	0
OTHER LOADS	X	1.00	42,498	42,498
SUM			59,248	65,998
CALC'D AMPERES			164.5	

	NOTES
1	
2	
3	
4	
5	
6	
7	

	Load Types
L	LIGHTING LOAD
R	RECEPTACLE LOAD
M	LARGEST MOTOR
	#REF!

PANEL : C1N	Location: Elect Rm 114 Main: 350 A	Bus Rating Amps 400 A	Volts: 208 / 120 Phase/Wires: 3 / 4	Mounting: SURFACE

LOAD INFORMATION			VOLTAMPS			CB RATING/POLES						VOLTAMPS					LOAD INFORMATION
LOAD	Note	Type	PH–A	PH–B	PH–C	Ckt	P	CB	PH	CB	P	Ckt	PH–A	PH–B	PH–C	Type	Note	LOAD
OPEN OFFICE 102 RECEPTACLES		R	1,000			1	1	20	A	20	1	2	1,000			R		OPEN OFFICE 102 RECEPTACLES
OPEN OFFICE 102 RECEPTACLES		R		1,000		3	1	20	B	20	1	4		500		R		OPEN OFFICE 102 RECEPTACLES
OPEN OFFICE 102 RECEPTACLES		R			1,000	5	1	20	C	20	1	6			1,000	R		OPEN OFFICE 102 RECEPTACLES
OPEN OFFICE 102 RECEPTACLES		R	500			7	1	20	A	20	1	8	500			R		OPEN OFFICE 102 RECEPTACLES
OPEN OFFICE 102 RECEPTACLES		R		1,000		9	1	20	B	20	1	10		1,000		R		OPEN OFFICE 102 RECEPTACLES
OPEN OFFICE 102 RECEPTACLES		R			1,000	11	1	20	C	20	1	12			500	R		OPEN OFFICE 102 RECEPTACLES
OPEN OFFICE 102 RECEPTACLES		R	1,000			13	1	20	A	20	1	14	1,000			R		OPEN OFFICE 102 RECEPTACLES
OPEN OFFICE 102 RECEPTACLES		R		1,000		15	1	20	B	20	1	16		500		R		OPEN OFFICE 102 RECEPTACLES
OPEN OFFICE 102 RECEPTACLES		R			1,000	17	1	20	C	20	1	18			500	R		OPEN OFFICE 102 RECEPTACLES
OPEN OFFICE 102 RECEPTACLES		R	1,000			19	1	20	A	20	1	20	500			R		OPEN OFFICE 102 RECEPTACLES
OPEN OFFICE 102 RECEPTACLES		R		1,000		21	1	20	B	20	1	22		500		R		OPEN OFFICE 102 RECEPTACLES
OPEN OFFICE 102 RECEPTACLES		R			500	23	1	20	C	20	1	24						SPARE
OPEN OFFICE 102 RECEPTACLES		R	1,000			25	1	20	A	20	1	26	500			R		OPEN OFFICE 102 RECEPTACLES
OPEN OFFICE 102 RECEPTACLES		R		500		27	1	20	B	20	1	28		500		R		OPEN OFFICE 102 RECEPTACLES
OPEN OFFICE 102 RECEPTACLES		R			1,000	29	1	20	C	20	1	30			1,000	R		OPEN OFFICE 102 RECEPTACLES
OPEN OFFICE 102 RECEPTACLES		R	500			31	1	20	A	20	1	32	500			R		OPEN OFFICE 102 RECEPTACLES
ROOM 108 RECEPTACLES		R		500		33	1	20	B	20	1	34				R		SPARE
ROOM 108 RECEPTACLES		R			500	35	1	20	C	20	1	36				R		SPARE
C2N			12,333			37	3	175	A	100	3	38	4,166			R		C1NA
C2N				12,333		39	–	175	B	100	–	40		4,166				C1NA
C2N					12,333	41	–	175	C	100	–	42			4,166			C1NA
			17,333	17,333	17,333			A	B	C			8,166	7,166	7,166			
TOTAL/PHASE:								25,499	24,499	24,499								

Load Breakdown		DF	VAxDF	VA
CONTINUOUS LOAD	X	1.25	0	0
LARGEST MOTOR	X	1.25	0	0
RECEPTACLE LOAD	X	NEC	19,583	29,166
DWELLING TYPE LOADS	X	1.00	0	0
OTHER LOADS	X	1.00	45,331	45,331
SUM			64,914	74,497
CALC'D AMPERES			180.2	

	NOTES
1	
2	
3	
4	
5	
6	
7	

	Load Types
L	LIGHTING LOAD
R	RECEPTACLE LOAD
M	LARGEST MOTOR
	#REF!

PANEL : C1SA	Location: Elect Rm 114 Main: 100 A	Bus Rating Amps 100 A	Volts: 208 / 120 Phase/Wires: 3 / 4	Mounting: SURFACE

LOAD INFORMATION			VOLTAMPS			CB RATING/POLES						VOLTAMPS					LOAD INFORMATION
LOAD	Note	Type	PH–A	PH–B	PH–C	Ckt	P	CB	PH	CB	P	Ckt	PH–A	PH–B	PH–C	Type	Note	LOAD
OPEN OFFICE 112 RECEPTACLES		R	1,000			1	1	20	A	20	1	2	1,000			R		OPEN OFFICE 112 RECEPTACLES
OPEN OFFICE 112 RECEPTACLES		R		1,000		3	1	20	B	20	1	4		1,000		R		OPEN OFFICE 112 RECEPTACLES
OPEN OFFICE 112 RECEPTACLES		R			500	5	1	20	C	20	1	6			1,000	R		OPEN OFFICE 112 RECEPTACLES
OPEN OFFICE 112 RECEPTACLES		R	500			7	1	20	A	20	1	8	1,000			R		OPEN OFFICE 112 RECEPTACLES
OPEN OFFICE 112 RECEPTACLES		R		1,000		9	1	20	B	20	1	10		500		R		OPEN OFFICE 112 RECEPTACLES
OPEN OFFICE 112 RECEPTACLES		R			500	11	1	20	C	20	1	12			500	R		OPEN OFFICE 112 RECEPTACLES
OPEN OFFICE 112 RECEPTACLES		R	1,000			13	1	20	A	20	1	14	1,000			R		OPEN OFFICE 112 RECEPTACLES
OPEN OFFICE 112 RECEPTACLES		R		1,000		15	1	20	B	20	1	16		1,000		R		OPEN OFFICE 112 RECEPTACLES
ROOM 113 RECEPTACLES		R			500	17	1	20	C	20	1	18						SPARE
ROOM 113 RECEPTACLES		R	500			19	1	20	A	20	1	20						SPARE
ROOM 113 RECEPTACLES		R		500		21	1	20	B	20	1	22						SPARE
SPARE						23	1	20	C	20	1	24						SPARE
SPARE						25	1	20	A	20	1	26						SPARE
SPARE						27	1	20	B	20	1	28						SPARE
SPARE						29	1	20	C	20	1	30						SPARE
			3,000	3,500	1,500			A	B	C			3,000	2,500	1,500			
TOTAL/PHASE:								6,000	6,000	3,000								

Load Breakdown		DF	VAxDF	VA
CONTINUOUS LOAD	X	1.25	0	0
LARGEST MOTOR	X	1.25	0	0
RECEPTACLE LOAD	X	NEC	12,500	15,000
DWELLING TYPE LOADS	X	1.00	0	0
OTHER LOADS	X	1.00	0	0
SUM			12,500	15,000
CALC'D AMPERES			34.7	

	NOTES
1	
2	
3	
4	
5	
6	
7	

	Load Types
L	LIGHTING LOAD
R	RECEPTACLE LOAD
M	LARGEST MOTOR
	#REF!

PANEL : C1NA	Location: Elect Rm 114 Main: 100 A	Bus Rating Amps 100 A	Volts: 208 / 120 Phase/Wires: 3 / 4	Mounting: SURFACE

LOAD INFORMATION			VOLTAMPS			CB RATING/POLES						VOLTAMPS					LOAD INFORMATION
LOAD	Note	Type	PH–A	PH–B	PH–C	Ckt	P	CB	PH	CB	P	Ckt	PH–A	PH–B	PH–C	Type	Note	LOAD
OPEN OFFICE 102 RECEPTACLE		R	500			1	1	20	A	20	1	2	1,000			R		OPEN OFFICE 102 RECEPTACLE
OPEN OFFICE 102 RECEPTACLE		R		500		3	1	20	B	20	1	4		1,000		R		OPEN OFFICE 102 RECEPTACLE
OPEN OFFICE 102 RECEPTACLE		R			500	5	1	20	C	20	1	6			1,000	R		OPEN OFFICE 102 RECEPTACLE
OPEN OFFICE 102 RECEPTACLE		R	500			7	1	20	A	20	1	8	500			R		OPEN OFFICE 102 RECEPTACLE
OPEN OFFICE 102 RECEPTACLE		R		500		9	1	20	B	20	1	10		1,000		R		OPEN OFFICE 102 RECEPTACLE
OPEN OFFICE 102 RECEPTACLE		R			500	11	1	20	C	20	1	12			500	R		OPEN OFFICE 102 RECEPTACLE
OPEN OFFICE 102 RECEPTACLE		R	500			13	1	20	A	20	1	14	1,000			R		OPEN OFFICE 102 RECEPTACLE
OPEN OFFICE 102 RECEPTACLE		R		500		15	1	20	B	20	1	16		1,000		R		OPEN OFFICE 102 RECEPTACLE
ROOM 108 RECEPTACLES		R			500	17	1	20	C	20	1	18						SPARE
ROOM 108 RECEPTACLES		R	500			19	1	20	A	20	1	20						SPARE
ROOM 108 RECEPTACLES		R		500		21	1	20	B	20	1	22						SPARE
SPARE						23			C	20	1	24						SPARE
SPACE						25		A				26						SPACE
SPACE						27			B			28						SPACE
SPACE						29			C			30						SPACE
			2,000	2,000	1,500			A	B	C			2,500	3,000	1,500			
TOTAL/PHASE:								4,500	5,000	3,000								

Load Breakdown		DF	VAxDF	VA
CONTINUOUS LOAD	X	1.25	0	0
LARGEST MOTOR	X	1.25	0	0
RECEPTACLE LOAD	X	NEC	11,250	12,500
DWELLING TYPE LOADS	X	1.00	0	0
OTHER LOADS	X	1.00	0	0
SUM			11,250	12,500
CALC'D AMPERES			31.2	

	NOTES
1	
2	
3	
4	
5	
6	
7	

	Load Types
L	LIGHTING LOAD
R	RECEPTACLE LOAD
M	LARGEST MOTOR
	#REF!

PANEL : L2NA	Location: Elect Rm 114 Main: LUGS ONLY	Bus Rating Amps 100	Volts: 208 / 120 Phase/Wires: 3 / 4	Mounting: SURFACE

LOAD INFORMATION			VOLTAMPS			CB RATING/POLES						VOLTAMPS					LOAD INFORMATION
LOAD	Note	Type	PH–A	PH–B	PH–C	Ckt	P	CB	PH	CB	P	Ckt	PH–A	PH–B	PH–C	Type	Note	LOAD
OPEN OFFICE 202 RECEPTACLE		R	500			1	1	20	A	20	1	2	1,548					OPEN OFFICE 202 SHADES
OPEN OFFICE 202 RECEPTACLE		R		500		3	1	20	B	20	1	4		1,548				OPEN OFFICE 202 SHADES
OPEN OFFICE 202 RECEPTACLE		R			500	5	1	20	C	20	1	6			1,548			OPEN OFFICE 202 SHADES
OPEN OFFICE 202 SHADES			1,548			7	1	20	A	20	1	8	1,548					OPEN OFFICE 202 SHADES
OPEN OFFICE 202 SHADES				1,548		9	1	20	B	20	1	10		1,260				MOTORIZED WINDOW POWER SUPPLY
OPEN OFFICE 202 SHADES					1,548	11	1	20	C	20	1	12			1,260			MOTORIZED WINDOW POWER SUPPLY
OPEN OFFICE 202 SHADES			1,548			13	1	20	A	20	1	14	1,260					MOTORIZED WINDOW POWER SUPPLY
OPEN OFFICE 202 SHADES				1,548		15	1	20	B	20	2	16		1,009				DAC–2
OPEN OFFICE 202 SHADES					1,548	17	1	20	C	20	–	18			1,009			DAC–2
FMCS FIELD PANELS			400			19	1	20	A			20	300					FMCS PANEL
FIRE SMOKE DAMPERS				100		21	1	20	B			22		1,000		M		TEF–1 & EF–4 ON ROOF
SPARE						23	1	20	C			24						SPACE
SPARE						25	1	20	A			26						SPACE
SPACE						27			B			28						SPACE
SPACE						29			C			30						SPACE
			3,996	3,696	3,596			A	B	C			4,656	4,817	3,817			
TOTAL/PHASE:								8,652	8,513	7,413								

Load Breakdown		DF	VAxDF	VA
CONTINUOUS LOAD	X	1.25	0	0
LARGEST MOTOR	X	1.25	1,250	1,000
RECEPTACLE LOAD	X	NEC	1,500	1,500
DWELLING TYPE LOADS	X	1.00	0	0
OTHER LOADS	X	1.00	22,078	22,078
SUM			24,828	24,578
CALC'D AMPERES			68.9	

	NOTES
1	
2	
3	
4	
5	
6	
7	

	Load Types
L	LIGHTING LOAD
R	RECEPTACLE LOAD
M	LARGEST MOTOR
D	DWELLING/RESIDENTIAL LOAD
	##FILENAME##

PROJECT STATUS

BID SET 04/27/09

ISSUE

MARK	DATE	DESCRIPTION	INITIAL

		DATE
DRAWN	L. DICKENS	
DESIGNED	N. ZECH	
CHECKED	D. KING	
PRELIMER	J. GRANT	
REQUESTOR	R. SCHULER	
RLGA		
SAFETY		
SUPERVISOR	S FRANKEL	

Ames Research Center
Moffet Field, California

N232 COLLABORATIVE SUPPORT FACILITY

PANEL SCHEDULES

SIZE	CAGE CODE		REV
D	25307	A232-0800- E902	
SCALE		INDEX	SHEET OF

DWG: Q:\60048683 – NASA Ames CSF N232\500 CAD\E\Sheet\E902.dwg User: zechn
DATE: Apr 28, 2009 – 10:57:28 am Images:
Xrefs: XBLOR

PANEL : L1N | Location: Elect Rm 114 | Main: 350 A | Bus Rating Amps 400 | Volts: 208 / 120 | Phase/Wires: 3 / 4 | Mounting: SURFACE

LOAD INFORMATION			VOLTAMPS			CB RATING/POLES							VOLTAMPS			LOAD INFORMATION		
LOAD	Note	Type	PH-A	PH-B	PH-C	Ckt	P	CB	PH	CB	P	Ckt	PH-A	PH-B	PH-C	Type	Note	LOAD
OPEN OFFICE 102, 103 RECEPTACLES		R	1,620			1	1	20	A	20	1	2	1,260			R		OPEN OFFICE 102, 103 RECEPTACLES
OPEN OFFICE 102, 103 RECEPTACLES		R		1,080		3	1	20	B	20	1	4		1,080		R		OPEN OFFICE 102, 103 RECEPTACLES
OPEN OFFICE 102, 103 RECEPTACLES		R			1,440	5	1	20	C	20	1	6			1,260	R		OPEN OFFICE 102, 103 RECEPTACLES
OPEN OFFICE 102, 103 RECEPTACLES		R	1,620			7	1	20	A	20	1	8	1,080			R		OPEN OFFICE 102, 103 RECEPTACLES
OPEN OFFICE 102, 103 RECEPTACLES		R		1,440		9	1	20	B	20	1	10		900		R		OPEN OFFICE 102, 103 RECEPTACLES
OPEN OFFICE 102, 103 RECEPTACLES		R			1,080	11	1	20	C	20	1	12			360	R		OPEN OFFICE 102, 103 RECEPTACLES
OPEN OFFICE 102, 103 RECEPTACLES		R	1,080			13	1	20	A	20	1	14	720			R		OPEN OFFICE 102, 103 RECEPTACLES
OPEN OFFICE 102, 103 RECEPTACLES		R		1,260		15	1	20	B	20	1	16		1,080		R		OPEN OFFICE 102, 103 RECEPTACLES
OPEN OFFICE 102, 103 RECEPTACLES		R			720	17	1	20	C	20	1	18			1,440	R		OPEN OFFICE 102, 103 RECEPTACLES
OPEN OFFICE 102, 103 RECEPTACLES		R	720			19	1	20	A	20	1	20	1,080			R		OPEN OFFICE 102, 103 RECEPTACLES
OPEN OFFICE 102, 103 RECEPTACLES		R		720		21	1	20	B	20	1	22		1,080		R		OPEN OFFICE 102, 103 RECEPTACLES
OPEN OFFICE 102, 103 RECEPTACLES		R			900	23	1	20	C	20	1	24			1,440	R		OPEN OFFICE 102, 103 RECEPTACLES
OPEN OFFICE 102, 103 RECEPTACLES		R	900			25	1	20	A	20	1	26						SPARE
OPEN OFFICE 102, 103 RECEPTACLES		R		900		27	1	20	B	20	1	28		500		R		OPEN OFFICE 102, 103 RECEPTACLES
OPEN OFFICE 102, 103 RECEPTACLES		R			720	29	1	20	C	20	1	30			500	R		OPEN OFFICE 102, 103 RECEPTACLES
FACP			500			31	1	20	A	20	1	32	500			R		OPEN OFFICE 102, 103 RECEPTACLES
OPEN OFFICE 102, 103 RECEPTACLES		R		600		33	1	20	B	20	1	34		0				SPARE
OPEN OFFICE 102, 103 RECEPTACLES		R			500	35	1	20	C	20	1	36						SPARE
L1NA			7,000			37	3	100	A	200	3	38	13,483					L2N
L1NA				7,000		39	–	100	B	200	–	40		13,483				L2N
L1NA					7,000	41	–	100	C	200	–	42			13,483			L2N
			13,440	13,000	12,360			A	B	C			18,123	18,123	18,483			
TOTAL/PHASE:								31,563	31,123	30,843								

Load Breakdown		DF	VAxDF	VA
CONTINUOUS LOAD	X	1.25	0	0
LARGEST MOTOR	X	1.25	0	0
RECEPTACLE LOAD	X	NEC	20,790	31,580
DWELLING TYPE LOADS	X	1.00	0	0
OTHER LOADS	X	1.00	61,949	61,949
SUM			82,739	93,529
CALC'D AMPERES			229.7	

NOTES	
1	
2	
3	
4	
5	
6	
7	

	Load Types
L	LIGHTING LOAD
R	RECEPTACLE LOAD
M	LARGEST MOTOR
D	DWELLING/RESIDENTIAL LOAD
	##FILENAME##

PANEL : L1S | Location: Elect Rm 114 | Main: 400 A | Bus Rating Amps 400 A | Volts: 208 / 120 | Phase/Wires: 3 / 4 | Mounting: SURFACE

LOAD INFORMATION			VOLTAMPS			CB RATING/POLES							VOLTAMPS			LOAD INFORMATION		
LOAD	Note	Type	PH-A	PH-B	PH-C	Ckt	P	CB	PH	CB	P	Ckt	PH-A	PH-B	PH-C	Type	Note	LOAD
OPEN OFFICE 112 RECEPTACLES		R	1,440			1	1	20	A	20	1	2	900			R		OPEN OFFICE 112 RECEPTACLES
OPEN OFFICE 112 RECEPTACLES		R		1,440		3	1	20	B	20	1	4		1,080		R		OPEN OFFICE 112 RECEPTACLES
OPEN OFFICE 112 RECEPTACLES		R			720	5	1	20	C	20	1	6			1,080	R		OPEN OFFICE 112 RECEPTACLES
OPEN OFFICE 112 RECEPTACLES		R	1,260			7	1	20	A	20	1	8	1,080			R		OPEN OFFICE 112 RECEPTACLES
OPEN OFFICE 112 RECEPTACLES		R		1,080		9	1	20	B	20	1	10		1,260		R		OPEN OFFICE 112 RECEPTACLES
OPEN OFFICE 112 RECEPTACLES		R			1,080	11	1	20	C	20	1	12			1,080	R		OPEN OFFICE 112 RECEPTACLES
OPEN OFFICE 112 RECEPTACLES		R	720			13	1	20	A	20	1	14	1,440			R		OPEN OFFICE 112 RECEPTACLES
OPEN OFFICE 112 RECEPTACLES		R		720		15	1	20	B	20	1	16		1,620		R		OPEN OFFICE 112 RECEPTACLES
OPEN OFFICE 112 RECEPTACLES		R			1,620	17	1	20	C	20	1	18			1,440	R		OPEN OFFICE 112 RECEPTACLES
OPEN OFFICE 112 RECEPTACLES		R	1,440			19	1	20	A	20	1	20	900			R		OPEN OFFICE 112 RECEPTACLES
OPEN OFFICE 112 RECEPTACLES		R		720		21	1	20	B	20	1	22		1,080		R		OPEN OFFICE 112 RECEPTACLES
OPEN OFFICE 112 RECEPTACLES		R			1,620	23	1	20	C	20	1	24			1,440	R		OPEN OFFICE 112 RECEPTACLES
OPEN OFFICE 112 RECEPTACLES		R	900			25	1	20	A	20	1	26	500			R		OPEN OFFICE 112 RECEPTACLES
OPEN OFFICE 112 RECEPTACLES		R		900		27	1	20	B	20	1	28		500		R		OPEN OFFICE 112 RECEPTACLES
OPEN OFFICE 112 RECEPTACLES		R			900	29	1	20	C	20	1	30			500	R		OPEN OFFICE 112 RECEPTACLES
OPEN OFFICE 112 RECEPTACLES		R	180			31	1	20	A	20	1	32						SPARE
OPEN OFFICE 112 RECEPTACLES		R		300		33	1	20	B	20	1	34						SPARE
OPEN OFFICE 112 RECEPTACLES		R			250	35	1	20	C	20	1	36						SPARE
L2S			14,000			37	3	200	A	100	3	38	7,500					L1SA
L2S				14,000		39	–	200	B	100	–	40		7,500				L1SA
L2S					14,000	41	–	200	C	100	–	42			7,500			L1SA
			19,940	19,160	20,190			A	B	C			12,320	13,040	13,040			
TOTAL/PHASE:								32,260	32,200	33,230								

Load Breakdown		DF	VAxDF	VA
CONTINUOUS LOAD	X	1.25	0	0
LARGEST MOTOR	X	1.25	0	0
RECEPTACLE LOAD	X	NEC	21,595	33,190
DWELLING TYPE LOADS	X	1.00	0	0
OTHER LOADS	X	1.00	64,500	64,500
SUM			86,095	97,690
CALC'D AMPERES			239.0	

NOTES	
1	
2	
3	
4	
5	
6	
7	

	Load Types
L	LIGHTING LOAD
R	RECEPTACLE LOAD
M	LARGEST MOTOR
D	DWELLING/RESIDENTIAL LOAD
	#REF!

PANEL : L1NA | Location: Elect Rm 114 | Main: LUGS ONLY | Bus Rating Amps 100 | Volts: 208 / 120 | Phase/Wires: 3 / 4 | Mounting: SURFACE

LOAD INFORMATION			VOLTAMPS			CB RATING/POLES							VOLTAMPS			LOAD INFORMATION		
LOAD	Note	Type	PH-A	PH-B	PH-C	Ckt	P	CB	PH	CB	P	Ckt	PH-A	PH-B	PH-C	Type	Note	LOAD
OPEN OFFICE 102, 103 RECEPTACLES		R	500			1	1	20	A	20	1	2	180			R		ROOM 209 RECEPTACLES
OPEN OFFICE 102, 103 RECEPTACLES		R		500		3	1	20	B	20	1	4		180		R		ROOM 209 RECEPTACLES
OPEN OFFICE 102, 103 RECEPTACLES		R			500	5	1	20	C	20	1	6			180	R		ROOM 209 RECEPTACLES
MOTORIZED SHADES 102			1,548			7	1	20	A	20	1	8	1,548					MOTORIZED SHADES 102
MOTORIZED SHADES 102				1,548		9	1	20	B	20	1	10		1,548				MOTORIZED SHADES 102
MOTORIZED SHADES 102					1,548	11	1	20	C	20	1	12			1,548			MOTORIZED SHADES 102
MOTORIZED SHADES 103			1,548			13	1	20	A	20	1	14	1,548					MOTORIZED SHADES 102
MOTORIZED SHADES 103				1,548		15	1	20	B	20	1	16		1,000				GARABAGE DISPOSAL
MOTORIZED SHADES 103					1,548	17	1	20	C	20	1	18			400			FMCS FIELD PANELS
RSP-1, RSP-2			1,056			19	1	20	A	20	1	20	600					CP-1, CP-2, CP-3
SPARE						21	1	20	B	20	1	22		500		R		FRIG RECEPT
SPARE						23			C	20	1	24			500			MOTORIZED DOOR
SPACE						25			A			26						SPACE
SPACE						27			B			28						SPACE
SPACE						29			C			30						SPACE
			4,652	3,596	3,596			A	B	C			3,876	3,228	2,628			
TOTAL/PHASE:								8,528	6,824	6,224								

Load Breakdown		DF	VAxDF	VA
CONTINUOUS LOAD	X	1.25	0	0
LARGEST MOTOR	X	1.25	0	0
RECEPTACLE LOAD	X	NEC	2,540	2,540
DWELLING TYPE LOADS	X	1.00	0	0
OTHER LOADS	X	1.00	19,036	19,036
SUM			21,576	21,576
CALC'D AMPERES			59.9	

NOTES	
1	
2	
3	
4	
5	
6	
7	

	Load Types
L	LIGHTING LOAD
R	RECEPTACLE LOAD
M	LARGEST MOTOR
D	DWELLING/RESIDENTIAL LOAD
	##FILENAME##

PANEL : L1SA | Location: Elect Rm 114 | Main: LUGS ONLY | Bus Rating Amps 100 A | Volts: 208 / 120 | Phase/Wires: 3 / 4 | Mounting: SURFACE

LOAD INFORMATION			VOLTAMPS			CB RATING/POLES							VOLTAMPS			LOAD INFORMATION		
LOAD	Note	Type	PH-A	PH-B	PH-C	Ckt	P	CB	PH	CB	P	Ckt	PH-A	PH-B	PH-C	Type	Note	LOAD
OPEN OFFICE 112 SHADES			1,548			1	1	20	A	20	1	2	1,548					OPEN OFFICE 112 SHADES
OPEN OFFICE 112 SHADES				1,548		3	1	20	B	20	1	4		1,548				OPEN OFFICE 112 SHADES
OPEN OFFICE 112 SHADES					1,548	5	1	20	C	20	1	6			1,548			OPEN OFFICE 112 SHADES
OPEN OFFICE 112 SHADES			1,548			7	1	20	A	20	1	8	1,548					OPEN OFFICE 112 SHADES
OPEN OFFICE 112 SHADES				1,548		9	1	20	B	20	1	10		1,548				OPEN OFFICE 112 SHADES
OPEN OFFICE 112 SHADES					1,548	11	1	20	C	20	1	12			1,548			OPEN OFFICE 112 SHADES
FCMS PANELS			1,200			13	1	20	A	20	1	14	1,548					OPEN OFFICE 112 SHADES
SITE IRRIGATION CONTROLLER				500		15	1	20	B	20	1	16		528				RSP-3
SPARE						17	1	20	C	20	1	18			400			FMCS FIELD PANELS
SPARE						19	1	20	A	20	1	20						SPARE
SPARE						21	1	20	B	20	1	22						SPARE
SPARE						23	1	20	C			24						SPACE
SPACE						25			A			26						SPACE
SPACE						27			B			28						SPACE
SPACE						29			C			30						SPACE
			4,296	3,596	3,096			A	B	C			4,644	3,624	3,496			
TOTAL/PHASE:								8,940	7,220	6,592								

Load Breakdown		DF	VAxDF	VA
CONTINUOUS LOAD	X	1.25	0	0
LARGEST MOTOR	X	1.25	0	0
RECEPTACLE LOAD	X	NEC	0	0
DWELLING TYPE LOADS	X	1.00	0	0
OTHER LOADS	X	1.00	22,752	22,752
SUM			22,752	22,752
CALC'D AMPERES			63.2	

NOTES	
1	
2	
3	
4	
5	
6	
7	

	Load Types
L	LIGHTING LOAD
R	RECEPTACLE LOAD
M	LARGEST MOTOR
D	DWELLING/RESIDENTIAL LOAD
	#REF!

PROJECT STATUS

BID SET 04/27/09

ISSUE

MARK	DATE	DESCRIPTION	INITIAL

DRAWN	L. DICKENS	DATE
DESIGNED	N. ZECH	DATE
CHECKED	D. KING	DATE
PRGM MGR	J. GRANT	DATE
REQUESTOR	R. SCHULER	DATE
FAGA		DATE
SAFETY		DATE
SUPERVISOR	S FRANKEL	DATE

Ames Research Center
Moffet Field, California

N232 COLLABORATIVE SUPPORT FACILITY

PANEL SCHEDULES

SIZE	CAGE CODE			REV
D	25307	A232-0800-	E903	
SCALE		INDEX	SHEET	OF

DWG: Q:\60048683 - NASA Ames CSF N232\500 CAD\E\Sheet\E903.dwg User: zechn
DATE: Apr 28, 2009 - 10:57:21 am Images:
Xrefs: *XBDR

PANEL : C2S	Location: Elect Rm 214 Main: 150 A	Bus Rating Amps 225 A	Volts: 208 / 120 Phase/Wires: 3 / 4	Mounting: SURFACE

LOAD INFORMATION			VOLTAMPS			CB RATING/POLES							VOLTAMPS			LOAD INFORMATION		
LOAD	Note	Type	PH-A	PH-B	PH-C	Ckt	P	CB	PH	CB	P	Ckt	PH-A	PH-B	PH-C	Type	Note	LOAD
OPEN OFFICE 212 RECEPTACLE		R	1,000			1	1	20	A	20	1	2	1,000			R		OPEN OFFICE 212 RECEPTACLE
OPEN OFFICE 212 RECEPTACLE		R		1,000		3	1	20	B	20	1	4		1,000		R		OPEN OFFICE 212 RECEPTACLE
OPEN OFFICE 212 RECEPTACLE		R			1,000	5	1	20	C	20	1	6			1,000	R		OPEN OFFICE 212 RECEPTACLE
OPEN OFFICE 212 RECEPTACLE		R	500			7	1	20	A	20	1	8	1,000			R		OPEN OFFICE 212 RECEPTACLE
OPEN OFFICE 212 RECEPTACLE		R		1,000		9	1	20	B	20	1	10		1,000		R		OPEN OFFICE 212 RECEPTACLE
OPEN OFFICE 212 RECEPTACLE		R			1,000	11	1	20	C	20	1	12			1,000	R		OPEN OFFICE 212 RECEPTACLE
OPEN OFFICE 212 RECEPTACLE		R	1,000			13	1	20	A	20	1	14	1,000			R		OPEN OFFICE 212 RECEPTACLE
OPEN OFFICE 212 RECEPTACLE		R		1,000		15	1	20	B	20	1	16		1,000		R		OPEN OFFICE 212 RECEPTACLE
OPEN OFFICE 212 RECEPTACLE		R			500	17	1	20	C	20	1	18			1,000	R		OPEN OFFICE 212 RECEPTACLE
OPEN OFFICE 212 RECEPTACLE		R	500			19	1	20	A	20	1	20	1,000			R		OPEN OFFICE 212 RECEPTACLE
OPEN OFFICE 212 RECEPTACLE		R		1,000		21	1	20	B	20	1	22		1,000		R		OPEN OFFICE 212 RECEPTACLE
OPEN OFFICE 212 RECEPTACLE		R			1,000	23	1	20	C	20	1	24			1,000	R		OPEN OFFICE 212 RECEPTACLE
OPEN OFFICE 212 RECEPTACLE		R	500			25	1	20	A	20	1	26	1,000			R		OPEN OFFICE 212 RECEPTACLE
OPEN OFFICE 212 RECEPTACLE		R		500		27	1	20	B	20	1	28		1,000		R		OPEN OFFICE 212 RECEPTACLE
OPEN OFFICE 212 RECEPTACLE		R			1,000	29	1	20	C	20	1	30			500	R		OPEN OFFICE 212 RECEPTACLE
OPEN OFFICE 212 RECEPTACLE		R	1,000			31	1	20	A	20	1	32	500			R		OPEN OFFICE 212 RECEPTACLE
ROOM 211		R		500		33	1	20	B	20	1	34						SPARE
ROOM 211		R			500	35	1	20	C	20	1	36						SPARE
ROOM 211		R	500			37	1	20	A	100	3	38	3,166					C2SA
ROOM 211		R		500		39	1	20	B	100	–	40		3,166				C2SA
SPARE						41	1	20	C	100	–	42			3,166			C2SA
			5,000	5,500	5,000			A	B	C			8,666	8,166	7,666			
TOTAL/PHASE:								13,666	13,666	12,666								

Load Breakdown		DF	VAxDF	VA
CONTINUOUS LOAD	X	1.25	0	0
LARGEST MOTOR	X	1.25	0	0
RECEPTACLE LOAD	X	NEC	20,250	30,500
DWELLING TYPE LOADS	X	1.00	0	0
OTHER LOADS	X	1.00	9,498	9,498
SUM			29,748	39,998
CALC'D AMPERES			82.6	

NOTES	
1	
2	
3	
4	
5	
6	
7	

	Load Types
L	LIGHTING LOAD
R	RECEPTACLE LOAD
M	LARGEST MOTOR
	#REF!

PANEL : C2N	Location: Elect Room Main: 175 A	Bus Rating Amps 225	Volts: 208 / 120 Phase/Wires: 3 / 4	Mounting: SURFACE

LOAD INFORMATION			VOLTAMPS			CB RATING/POLES							VOLTAMPS			LOAD INFORMATION		
LOAD	Note	Type	PH-A	PH-B	PH-C	Ckt	P	CB	PH	CB	P	Ckt	PH-A	PH-B	PH-C	Type	Note	LOAD
OPEN OFFICE 202 RECEPTACLE		R	1,000			1	1	20	A	20	1	2	1,000			R		OPEN OFFICE 202 RECEPTACLE
OPEN OFFICE 202 RECEPTACLE		R		1,000		3	1	20	B	20	1	4		1,000		R		OPEN OFFICE 202 RECEPTACLE
OPEN OFFICE 202 RECEPTACLE		R			1,000	5	1	20	C	20	1	6			1,000	R		OPEN OFFICE 202 RECEPTACLE
OPEN OFFICE 202 RECEPTACLE		R	1,000			7	1	20	A	20	1	8	1,000			R		OPEN OFFICE 202 RECEPTACLE
OPEN OFFICE 202 RECEPTACLE		R		1,000		9	1	20	B	20	1	10		1,000		R		OPEN OFFICE 202 RECEPTACLE
OPEN OFFICE 202 RECEPTACLE		R			1,000	11	1	20	C	20	1	12			1,000	R		OPEN OFFICE 202 RECEPTACLE
OPEN OFFICE 202 RECEPTACLE		R	1,000			13	1	20	A	20	1	14	1,000			R		OPEN OFFICE 202 RECEPTACLE
OPEN OFFICE 202 RECEPTACLE		R		1,000		15	1	20	B	20	1	16		500		R		OPEN OFFICE 202 RECEPTACLE
OPEN OFFICE 202 RECEPTACLE		R			1,000	17	1	20	C	20	1	18			500	R		OPEN OFFICE 202 RECEPTACLE
OPEN OFFICE 202 RECEPTACLE		R	1,000			19	1	20	A	20	1	20	500			R		OPEN OFFICE 202 RECEPTACLE
OPEN OFFICE 202 RECEPTACLE		R		1,000		21	1	20	B	20	1	22		500		R		OPEN OFFICE 202 RECEPTACLE
OPEN OFFICE 202 RECEPTACLE		R			500	23	1	20	C	20	1	24			500	R		OPEN OFFICE 202 RECEPTACLE
OPEN OFFICE 202 RECEPTACLE		R	1,000			25	1	20	A	20	1	26	500			R		OPEN OFFICE 202 RECEPTACLE
OPEN OFFICE 202 RECEPTACLE		R		1,000		27	1	20	B	20	1	28		500		R		OPEN OFFICE 202 RECEPTACLE
OPEN OFFICE 202 RECEPTACLE		R			1,000	29	1	20	C	20	1	30			1,000	R		OPEN OFFICE 202 RECEPTACLE
OPEN OFFICE 202 RECEPTACLE		R	1,000			31	1	20	A	20	1	32	1,000			R		OPEN OFFICE 202 RECEPTACLE
SPARE						33	1	20	B	20	1	34						SPARE
SPARE						35	1	20	C	20	1	36						SPARE
SPARE						37	1	20	A	100	3	38	3,000					C2NA
SPARE						39	1	20	B	100	–	40		3,000				C2NA
SPARE						41	1	20	C	100	–	42			3,000			C2NA
			6,000	5,000	4,500			A	B	C			8,000	6,500	7,000			
TOTAL/PHASE:								14,000	11,500	11,500								

Load Breakdown		DF	VAxDF	VA
CONTINUOUS LOAD	X	1.25	0	0
LARGEST MOTOR	X	1.25	0	0
RECEPTACLE LOAD	X	NEC	19,000	28,000
DWELLING TYPE LOADS	X	1.00	0	0
OTHER LOADS	X	1.00	9,000	9,000
SUM			28,000	37,000
CALC'D AMPERES			77.7	

NOTES	
1	
2	
3	
4	
5	
6	
7	

	Load Types
L	LIGHTING LOAD
R	RECEPTACLE LOAD
M	LARGEST MOTOR
	#REF!

PANEL : C2SA	Location: Elect Rm 214 Main: LUGS ONLY	Bus Rating Amps 100 A	Volts: 208 / 120 Phase/Wires: 3 / 4	Mounting: SURFACE

LOAD INFORMATION			VOLTAMPS			CB RATING/POLES							VOLTAMPS			LOAD INFORMATION		
LOAD	Note	Type	PH-A	PH-B	PH-C	Ckt	P	CB	PH	CB	P	Ckt	PH-A	PH-B	PH-C	Type	Note	LOAD
OPEN OFFICE 212 RECEPTACLE		R	1,000			1	1	20	A	20	1	2	500			R		OPEN OFFICE 212 RECEPTACLE
OPEN OFFICE 212 RECEPTACLE		R		500		3	1	20	B	20	1	4		500		R		OPEN OFFICE 212 RECEPTACLE
OPEN OFFICE 212 RECEPTACLE		R			1,000	5	1	20	C	20	1	6			500	R		OPEN OFFICE 212 RECEPTACLE
OPEN OFFICE 212 RECEPTACLE		R	1,000			7	1	20	A	20	1	8	500			R		OPEN OFFICE 212 RECEPTACLE
OPEN OFFICE 212 RECEPTACLE		R		1,000		9	1	20	B	20	1	10		1,000		R		OPEN OFFICE 212 RECEPTACLE
OPEN OFFICE 212 RECEPTACLE		R			1,000	11	1	20	C	20	1	12			500	R		OPEN OFFICE 212 RECEPTACLE
OPEN OFFICE 212 RECEPTACLE		R	1,000			13	1	20	A	20	1	14	1,000			R		OPEN OFFICE 212 RECEPTACLE
OPEN OFFICE 212 RECEPTACLE		R		1,000		15	1	20	B	20	1	16		500		R		OPEN OFFICE 212 RECEPTACLE
SPARE						17	1	20	C	20	1	18						SPARE
SPARE						19	1	20	A	20	1	20						SPARE
SPARE						21	1	20	B	20	1	22						SPARE
SPARE						23	1	20	C	20	1	24						SPARE
SPACE						25			A			26						SPACE
SPACE						27			B			28						SPACE
SPACE						29			C			30						SPACE
			3,000	2,500	2,000			A	B	C			2,000	2,000	1,000			
TOTAL/PHASE:								5,000	4,500	3,000								

Load Breakdown		DF	VAxDF	VA
CONTINUOUS LOAD	X	1.25	0	0
LARGEST MOTOR	X	1.25	0	0
RECEPTACLE LOAD	X	NEC	11,250	12,500
DWELLING TYPE LOADS	X	1.00	0	0
OTHER LOADS	X	1.00	0	0
SUM			11,250	12,500
CALC'D AMPERES			31.2	

NOTES	
1	
2	
3	
4	
5	
6	
7	

	Load Types
L	LIGHTING LOAD
R	RECEPTACLE LOAD
M	LARGEST MOTOR
D	DWELLING/RESIDENTIAL LOAD
	#REF!

PANEL : C2NA	Location: Elect Room Main: Lugs Only	Bus Rating Amps 100	Volts: 208 / 120 Phase/Wires: 3 / 4	Mounting: SURFACE

LOAD INFORMATION			VOLTAMPS			CB RATING/POLES							VOLTAMPS			LOAD INFORMATION		
LOAD	Note	Type	PH-A	PH-B	PH-C	Ckt	P	CB	PH	CB	P	Ckt	PH-A	PH-B	PH-C	Type	Note	LOAD
OPEN OFFICE 202 RECEPTACLES		R	500			1	1	20	A	20	1	2	500			R		OPEN OFFICE 202 RECEPTACLES
OPEN OFFICE 202 RECEPTACLES		R		500		3	1	20	B	20	1	4		500		R		OPEN OFFICE 202 RECEPTACLES
OPEN OFFICE 202 RECEPTACLES		R			1,000	5	1	20	C	20	1	6			500	R		OPEN OFFICE 202 RECEPTACLES
OPEN OFFICE 202 RECEPTACLES		R	500			7	1	20	A	20	1	8	500			R		OPEN OFFICE 202 RECEPTACLES
OPEN OFFICE 202 RECEPTACLES		R		500		9	1	20	B	20	1	10		500		R		OPEN OFFICE 202 RECEPTACLES
OPEN OFFICE 202 RECEPTACLES		R			500	11	1	20	C	20	1	12			500	R		OPEN OFFICE 202 RECEPTACLES
OPEN OFFICE 202 RECEPTACLES		R	500			13	1	20	A	20	1	14	500			R		OPEN OFFICE 202 RECEPTACLES
OPEN OFFICE 202 RECEPTACLES		R		1,000		15	1	20	B	20	1	16		500		R		OPEN OFFICE 202 RECEPTACLES
OPEN OFFICE 202 RECEPTACLES		R			500	17	1	20	C	20	1	18			1,000	R		RM 207 RECEPT FOR MECHOSHADES
SPARE						19	1	20	A	20	1	20	500			R		RM 207 RECEPT FOR QUANTUM SERVER
SPARE						21	1	20	B	20	1	22						SPARE
SPARE						23	1	20	C	20	1	24						SPARE
SPACE						25			A			26						SPACE
SPACE						27			B			28						SPACE
SPACE						29			C			30						SPACE
			1,500	2,000	2,000			A	B	C			2,000	1,500	2,000			
TOTAL/PHASE:								3,500	3,500	4,000								

Load Breakdown		DF	VAxDF	VA
CONTINUOUS LOAD	X	1.25	0	0
LARGEST MOTOR	X	1.25	0	0
RECEPTACLE LOAD	X	NEC	10,500	11,000
DWELLING TYPE LOADS	X	1.00	0	0
OTHER LOADS	X	1.00	0	0
SUM			10,500	11,000
CALC'D AMPERES			29.1	

NOTES	
1	
2	
3	
4	
5	
6	
7	

	Load Types
L	LIGHTING LOAD
R	RECEPTACLE LOAD
M	LARGEST MOTOR
D	DWELLING/RESIDENTIAL LOAD
	#REF!

INVERTER 1 OUTPUT CIRCUIT BREAKER SCHEDULE

INVERTER SIZE: 5 KW
INVERTER EFFICENCY: 98%
LOCATION: ELECTRICAL ROOM 107
SUPPLY CIRCUIT: HLN–3

RELAY	VOLTAGE	DESCRIPTION	LOAD (KVA)
1	120V	LCS PANEL	1800
2	277V	FIRST LEVEL NORTH WING	1100
3	277V	SECOND LEVEL NORTH WING	1100
4	277V	STAIRS NORTH SIDE	250
5	120V	SITE NORTH SIDE	160
6	120V	SITE NORTH SIDE	143
7			
8			
9			
10			
TOTAL (KVA)			4553

INVERTER 2 OUTPUT CIRCUIT BREAKER SCHEDULE

INVERTER SIZE: 5 KW
INVERTER EFFICENCY: 98%
LOCATION: ELECTRICAL ROOM 114
SUPPLY CIRCUIT: HLS–3

RELAY	VOLTAGE	DESCRIPTION	LOAD (KVA)
1	120V	LCS PANEL	1800
2	277V	FIRST LEVEL SOUTH WING	1050
3	277V	SECOND LEVEL SOUTH WING	1000
4	277V	STAIRS NORTH SIDE	360
5	120V	SITE NORTH SIDE	180
6	120V	SITE NORTH SIDE	250
7			
8			
9			
10			
TOTAL (KVA)			4640

PROJECT STATUS: BID SET 04/27/09

ISSUE

MARK	DATE	DESCRIPTION	INITIAL

DRAWN	L. DICKENS	DATE
DESIGNED	N. ZECH	DATE
CHECKED	D. KING	DATE
PROJ.MGR	J. GRANT	DATE
REQUESTOR	R. SCHULER	DATE
FS&A		DATE
SAFETY		DATE
SUPERVISOR	S FRANKEL	DATE

Ames Research Center
Moffet Field, California

N232 COLLABORATIVE SUPPORT FACILITY

PANEL SCHEDULES

SIZE	CAGE CODE			REV
D	25307	A232-0800-	E904	
SCALE		INDEX	SHEET	OF

DWG: Q:\60048683 – NASA Ames CSF N232\500 CAD\E\Sheet\E904.dwg User: zechn
DATE: Apr 28, 2009 – 10:57:40 am Images:
Xrefs: XBDR

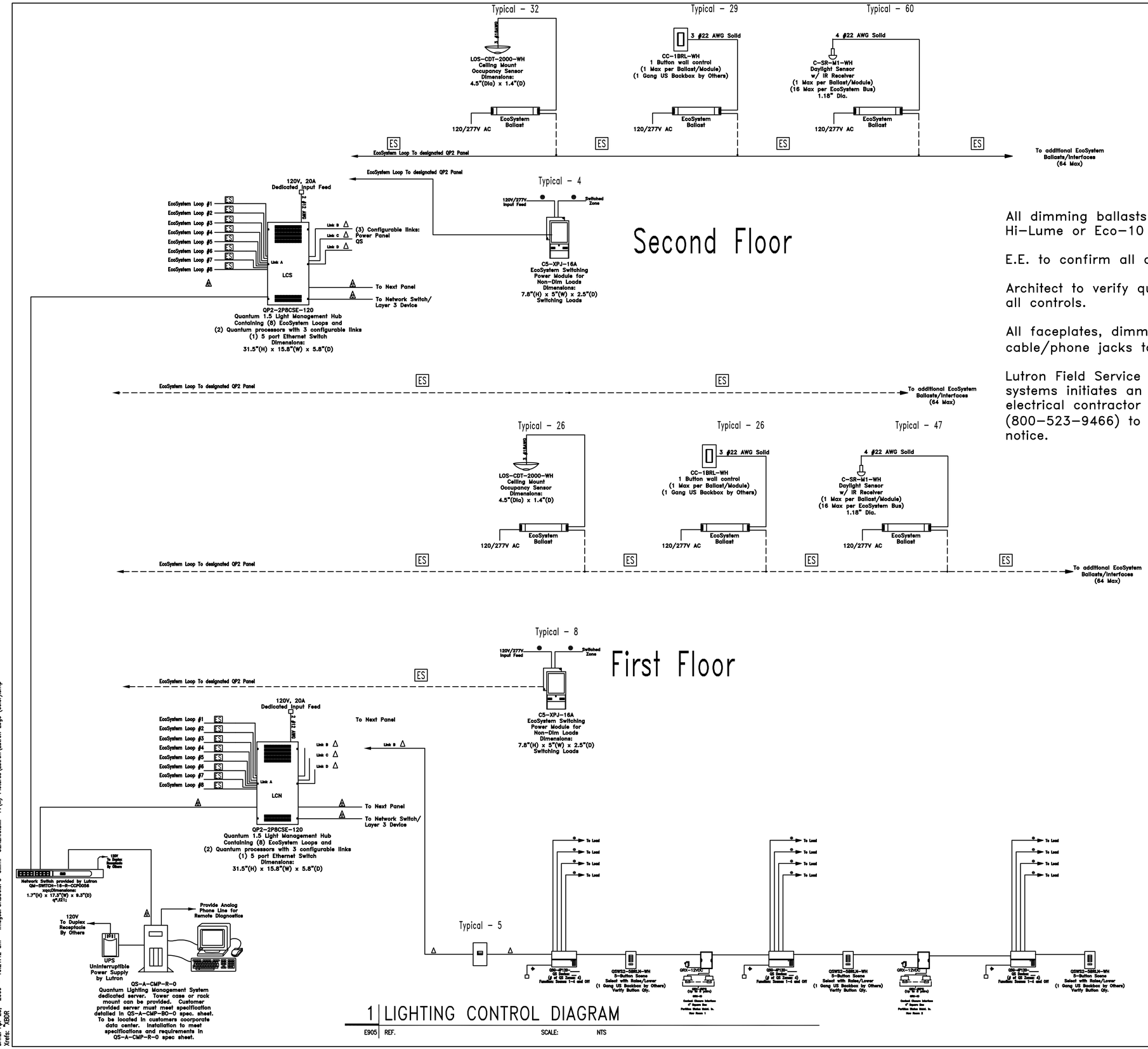

1 LIGHTING CONTROL DIAGRAM

E905 REF. SCALE: NTS

WIRING SYMBOLS

- Lutron cable GRX-CBL-46L (5 Conductor Non-Plenum) or GRX-PCBL-46L (5 Conductor Plenum rated). Otherwise use 2 #12AWG (2.5mm²), 1 Belden #9461, and between panels add 1 #18AWG (1.0mm²) for emergency sensing.
- ES EcoSystem Bus: Lutron cable C-CBL-216-GR-1 (2 #16 (1.31mm²) Conductor Non-Plenum) or C-PCBL-216-CL-1 (2 #16 (1.31mm²) Conductor Plenum rated).
- CAT5e or better cable for dedicated Lutron network terminated with RJ45 connectors (to be provided by others). 328 feet (100m) maximum run
- 2 #12AWG (2.5 mm²)
- 3 #12AWG (2.5 mm²)
- Input Power

All dimming ballasts to be Lutron EcoSystem, Hi-Lume or Eco-10 type.

E.E. to confirm all circuiting requirements.

Architect to verify quantity, location & finish of all controls.

All faceplates, dimmers, switches, receptacles & cable/phone jacks to be Lutron NOVA T*.

Lutron Field Service commissioning included in all systems initiates an 8 year limited warranty. The electrical contractor must contact Lutron (800-523-9466) to set up visit with 10 days notice.

PROJECT STATUS

BID SET 04/27/09

ISSUE			
MARK	DATE	DESCRIPTION	INITIAL

DRAWN	S. KANDA	DATE
DESIGNED	N. ZECH	DATE
CHECKED	D. KING	DATE
PRELIMER	J. GRANT	DATE
REQUESTOR	R. SCHULER	DATE
FSQA		DATE
SAFETY		DATE
SUPERVISOR	S FRANKEL	DATE

Ames Research Center
Moffet Field, California

N232 COLLABORATIVE SUPPORT FACILITY

ELECTRICAL DETAILS

SIZE	CAGE CODE			REV
D	25307	A232-0800-	E905	
SCALE		INDEX	SHEET	OF

DWG: Q:\60048883 - NASA Ames CSF N232\500 CAD\E\Sheet\E905.dwg User: zechn
DATE: Apr 28, 2009 - 10:21:42 am Images:"5MB56.JPG" "OK.TIF" "GENERIC.BMP" F:\My Pictures\Lutron\Lutron Logo (color).bmp"
Xrefs: "X3DR

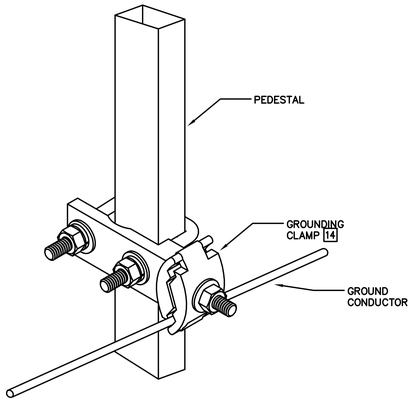

1 | PEDESTAL GROUND CLAMP DETAIL

E906 | REF. SCALE: NTS

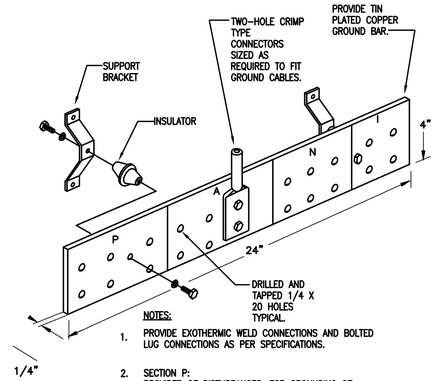

NOTES:

1. PROVIDE EXOTHERMIC WELD CONNECTIONS AND BOLTED LUG CONNECTIONS AS PER SPECIFICATIONS.
2. SECTION P: PROVIDER OF DISTURBANCES, FOR GROUNDING OF SERVICE ENTRANCE CABLES AND PROTECTORS
3. SECTION A: ABSORBER OF DISTURBANCES, FOR CONNECTION TO ELECTRICAL SYSTEM MAIN GROUND BAR (MGB) AND BUILDING STEEL.
4. SECTION N: NON ISOLATED SYSTEMS, FOR CONNECTION TO TELECOMMUNICATION GROUND BARS.
5. SECTION I: ISOLATED GROUND ZONES

2 | GROUND BAR DETAIL

E906 | REF. SCALE: NTS

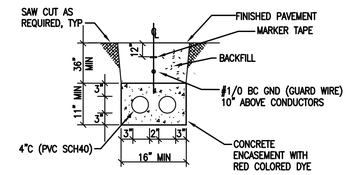

3 | POWER DUCT BANK SECTION

E906 | REF. SCALE: NTS

GENERAL NOTES:

1. SEE SHEET E001 AND E002 FOR SYMBOLS, ABBREVIATIONS AND GENERAL NOTES.
2. SEE SHEET E120 FOR FEEDER SCHEDULE.

PLAN NOTES:

1. PROVIDE #3/0 AWG BONDING CONDUCTOR.
2. PROVIDE #3/0 AWG BONDING CONDUCTOR TO SWITCHBOARD ENCLOSURE. SEE 1/E907.
3. PROVIDE #3/0 AWG BONDING CONDUCTOR TO UFER GROUND.
4. PROVIDE #6 AWG BONDING CONDUCTOR TO FIRST FLOOR SOUTH WING PEDESTAL GROUNDING.
5. PROVIDE #3/0 AWG BONDING CONDUCTOR TO NORTH WING FIRST FLOOR GROUND BAR.
6. PROVIDE #6 AWG BONDING CONDUCTOR TO FIRST FLOOR NORTH WING PEDESTAL GROUNDING.
7. PROVIDE #6 AWG BONDING CONDUCTOR TO SECOND FLOOR SOUTH WING PEDESTAL GROUNDING.
8. PROVIDE #6 AWG BONDING CONDUCTOR TO SECOND FLOOR NORTH WING PEDESTAL GROUNDING.
9. PROVIDE #3/0 AWG BONDING CONDUCTOR TO UFER GROUND.
10. PROVIDE #750 KCMIL BONDING CONDUCTOR TO GROUND TEST WELL. PROVIDE GROUND RODS AS REQUIRED TO ACHIEVE 25 OHMS OR LESS.
11. PROVIDE #500 KCMIL BONDING JUMPER TO NEUTRAL BUS BAR.
12. ELECTRICAL GROUND BAR. SEE DETAIL 5/E906.
13. TELECOMMUNCATION GROUND BAR. SEE DETAIL 2/E906.
14. PEDESTAL GROUNDING SHALL BE NO MORE THAN EVERY 20FT APART OR APPROVED MANUFACTURER RECOMMENDATIONS.

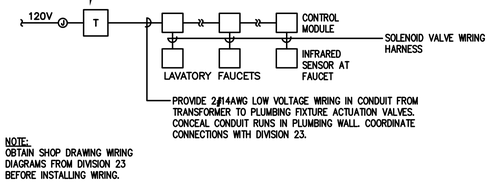

NOTE:
OBTAIN SHOP DRAWING WIRING DIAGRAMS FROM DIVISION 23 BEFORE INSTALLING WIRING.

4 | AUTOMATIC ACTUATION VALVE DETAIL

E906 | REF. SCALE: NTS

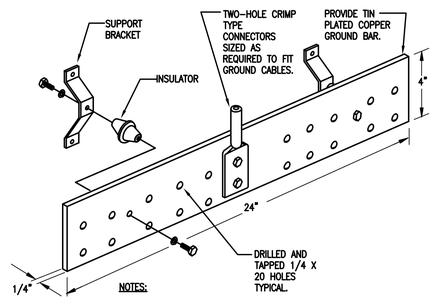

NOTES:

1. PROVIDE EXOTHERMIC WELD CONNECTIONS AND BOLTED LUG CONNECTIONS AS PER SPECIFICATIONS.

5 | GROUND BAR DETAIL

E906 | REF. SCALE: NTS

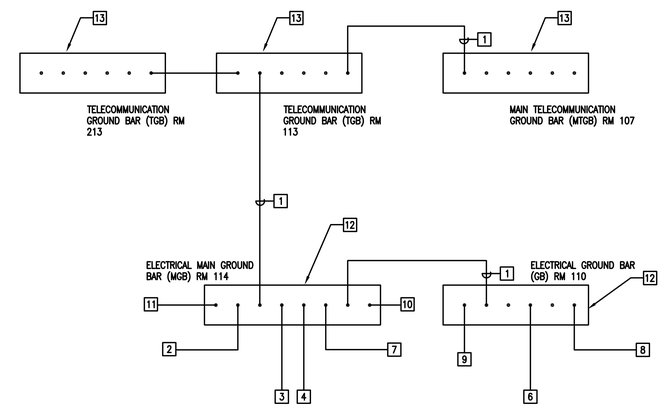

6 | GROUND BAR DETAIL

E906 | REF. SCALE: NTS

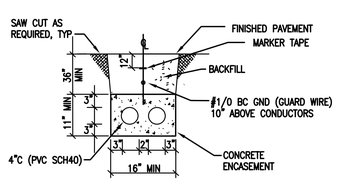

7 | COMMUNICATION DUCT BANK SECTION

E906 | REF. SCALE: NTS

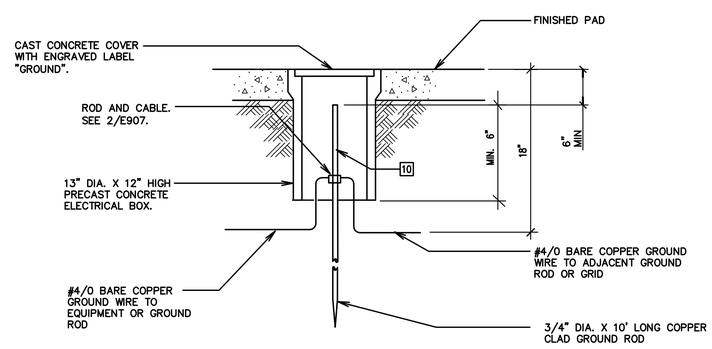

8 | GROUND WELL DETAIL

E906 | REF. SCALE: NTS

PROJECT STATUS: BID SET 04/27/09

ISSUE			
MARK	DATE	DESCRIPTION	INITIAL

DRAWN	S. KANDA	DATE
DESIGNED	N. ZECH	DATE
CHECKED	D. KING	DATE
PRELIMGR	J. GRANT	DATE
REQUESTOR	R. SCHULER	DATE
RLGA		DATE
SAFETY		DATE
SUPERVISOR	S FRANKEL	DATE

Ames Research Center
Moffet Field, California

N232 COLLABORATIVE SUPPORT FACILITY
ELECTRICAL DETAILS

SIZE	CAGE CODE			REV
D	25307	A232-0800-	E906	
SCALE		INDEX	SHEET OF	

DWG: Q:\60048683 - NASA Ames CSF N232\500 CAD\E\Sheet\E906.dwg User: zechn
DATE: Apr 28, 2009 - 10:26:04 am Images: F:\My Pictures\Lutron\Lutron Logo (color).bmp"
Xrefs: XBLR

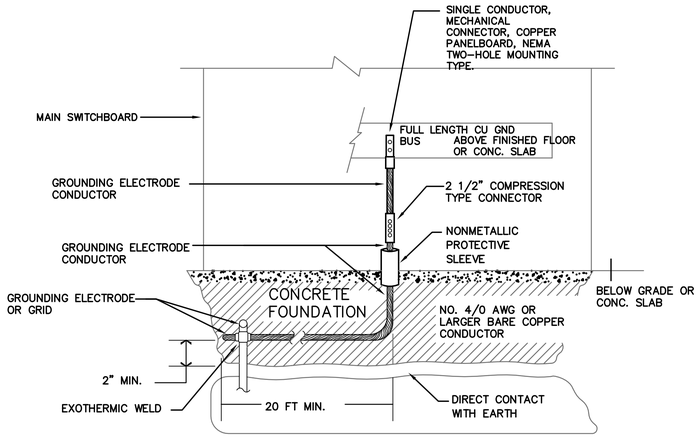

1 GROUND BUS BAR DETAIL

E907 REF. SCALE: NTS

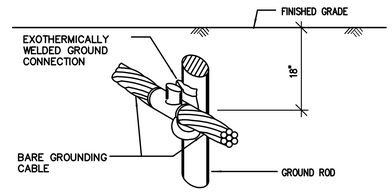

NOTES:
EXOTHERMICALLY WELDED GROUND CONNECTION SHALL BE SIZED ACCORDING TO THE MANUFACTURER'S SPECIFICATIONS FOR CABLE SIZE AND ROD USED, AS SHOWN ON PLANS.

2 GROUND BUS BAR DETAIL

E907 REF. SCALE: NTS

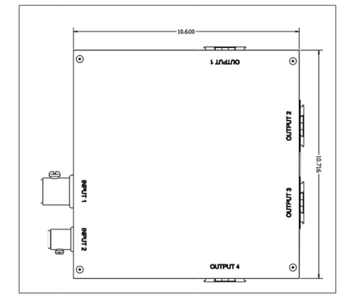

3 PDM DETAIL

E907 REF. SCALE: NTS

GENERAL NOTES:

1. SEE SHEET E001 AND E002 FOR SYMBOLS, ABBREVIATIONS AND GENERAL NOTES.
2. SEE SHEET E120 FOR FEEDER SCHEDULE.

PLAN NOTES:

1 PROVIDE #4/0 AWG BONDING CONDUCTOR TO MAIN TELECOMMUNICATION GROUND BAR.

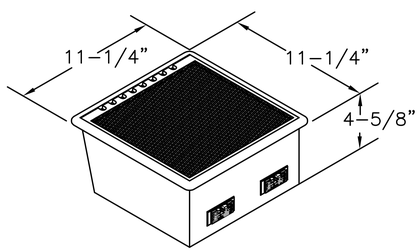

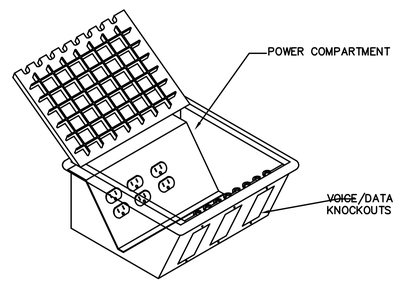

4 ACCESS FLOOR BOX DETAIL

E907 REF. SCALE: NTS

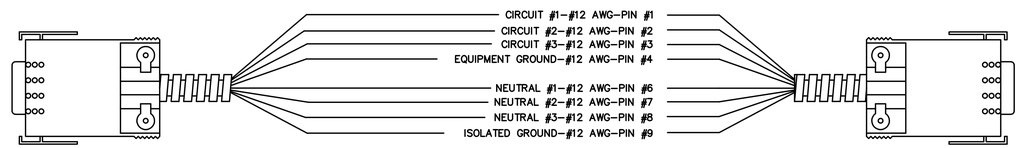

3 HOTS, 3 NEUTRALS AND 2 GROUNDS

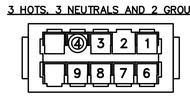

1. HOT #1-#12 THHN
2. HOT #2-#12 THHN
3. HOT #3-#12 THHN
4. EQUIPMENT GROUND-#12 THHN

6. NEUTRAL #1-#12 THHN
7. NEUTRAL #2-#12 THHN
8. NEUTRAL #3-#12 THHN
9. ISOLATED GROUND-#12 THHN

5 FLOOR BOX CONNECTOR WHIP

E907 REF. SCALE: NTS

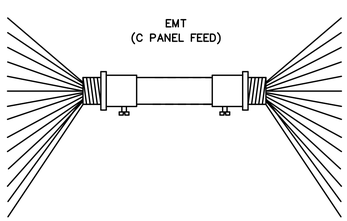

CIRCUIT #1 - BLACK - #10 AWG
CIRCUIT #2 - RED - #10 AWG
CIRCUIT #3 - BLUE - #10 AWG
CIRCUIT #4 - BLACK - #10 AWG
CIRCUIT #5 - RED - #10 AWG
CIRCUIT #6 - BLUE - #10 AWG
CIRCUIT #7 - BLACK - #10 AWG
CIRCUIT #8 - RED - #10 AWG
NEUTRAL #1 - WHITE - #10 AWG
NEUTRAL #2 - WHITE - #10 AWG
NEUTRAL #3 - WHITE - #10 AWG
NEUTRAL #4 - WHITE - #10 AWG
NEUTRAL #5 - WHITE - #10 AWG
NEUTRAL #6 - WHITE - #10 AWG
NEUTRAL #7 - WHITE - #10 AWG
NEUTRAL #8 - WHITE - #10 AWG
ISOLATED GROUND - GREEN/YELLOW - #10 AWG
EQUIPMENT GROUND - GREEN - #10 AWG

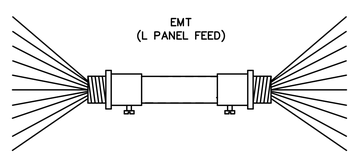

CIRCUIT #1 - BLACK - #10 AWG
CIRCUIT #2 - RED - #10 AWG
CIRCUIT #3 - BLUE - #10 AWG
CIRCUIT #4 - BLACK - #10 AWG
NEUTRAL #1 - WHITE - #10 AWG
NEUTRAL #2 - WHITE - #10 AWG
NEUTRAL #3 - WHITE - #10 AWG
NEUTRAL #4 - WHITE - #10 AWG
EQUIPMENT GROUND - GREEN - #10 AWG

6 PDM POWER HOMERUN CONNECTIONS (1 OF EACH PER PDM)

E907 REF. SCALE: NTS

PROJECT STATUS: BID SET 04/27/09

ISSUE			
MARK	DATE	DESCRIPTION	INITIAL

		DATE
DRAWN	S. KANDA	
DESIGNED	N. ZECH	
CHECKED	D. KING	
PRELIMGR	J. GRANT	
REVIEWCTOR	R. SCHULER	
FAGA		
SAFETY		
SUPERVISOR	S FRANKEL	

Ames Research Center
Moffet Field, California

N232 COLLABORATIVE SUPPORT FACILITY
ELECTRICAL DETAILS

SIZE	CAGE CODE		REV
D	25307	A232-0800- E907	
SCALE		INDEX	SHEET OF

DWG: Q:\60048683 - NASA Ames CSF N232\500 CAD\E\Sheet\E907.dwg User: zechn
DATE: Apr 28, 2009 - 10:25:56 am Images: Ok.tif"F:\My Pictures\Lutron\Lutron Logo (color).bmp"Q:\60048683 - NASA Ames CSF N232\500 CAD\E\Sheet\PDM.tif"
Xrefs: 7DBR

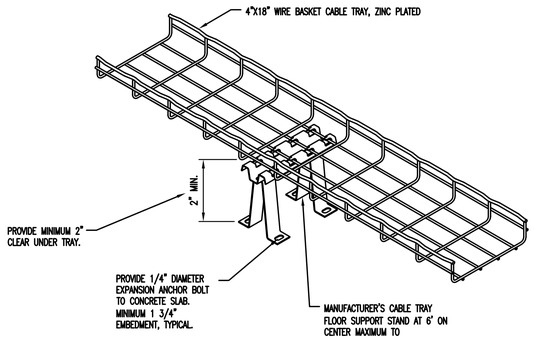

1 | CABLE TRAY SUPPORT DETAIL

E908 | REF. SCALE: NTS

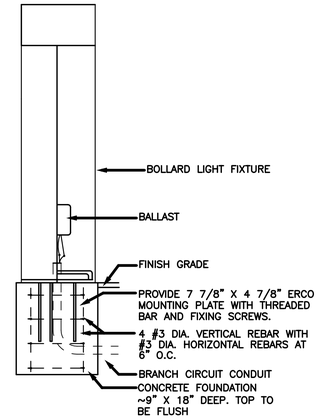

NOTE:
USE MANUFACTURER INSTALLATION GUIDE FOR RECOMMENDED INSTALLATION GUIDELINES.

2 | S2 FIXTURE DETAIL

E908 | REF. SCALE: NTS

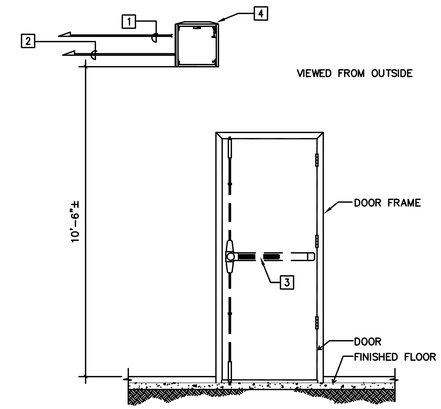

3 | SINGLE DOOR (PANIC HARDWARE)

E908 | REF. SCALE: NTS

GENERAL NOTES:

1. SEE SHEET E001 AND E002 FOR SYMBOLS, ABBREVIATIONS AND GENERAL NOTES.
2. POWER TRANSFER HINGES SHALL BE MANUFACTURED BY MCKINNEY OR HAGER; RATED AT MINIMUM 1 AMP CONTINOUS AND 16 AMPS INTERMITTENT.
3. ARMORED DOOR CORDS SHALL BE SCHLAGE #798-18, MOUNT DOOR CORD NEAR UPPER HINGE OF THE DOOR TO AVOID ACCIDENTAL DAMAGE.

PLAN NOTES:

1. 3/4" CONDUIT TO ROOM 107.
2. 1" CONDUIT TO ACCESS CONTROL PANEL IN COMMUNICATIONS ROOM 108.
3. VON DUPRIN 33A PANIC HARDWARE WITH ELECTRIC LATCH (EL) AND REQUEST-TO-EXIT (RX) OPTIONS.
4. 12"X12"X5" NEMA 1 SCREWED COVER PULLBOX.
5. GE SENTROL MODEL 1070 RECESSED MAGNETIC SPDT CONTACTS (ONE SET ON EACH LEAF)
6. DOUBLE GANG METAL BOX MOUNTED TO EXTERIOR DOOR ACTIVATION BOLLARD.
7. 3/4" CONDUIT WITH 3#12 TO 120VAC PANEL.
8. 1" CONDUIT TO ACCESS CONTROL PANEL IN COMMUNICATIONS ROOM.
9. (1) 2-CONDUCTOR #18 SHIELD.
10. (1) 2-CONDUCTOR #18 SHIELDED (BY OTHERS).
11. ADA PUSHPLATE: ONE INSIDE AND ONE OUTSIED LOCATED ON BOLLLARD.
12. VON DUPRIN S873 POWER SUPPLY WITH 871-2 AND 873-A0 OPTIONS MOUNTED AS CLOSE TO DOOR AS PRACTICABLE.
13. LCN 4600 ELECTRIC AUTOEQUALIZER SERIES (#4640 FOR PUSH SIDE INSTALLATIONOR #4630 FOR PULL SIDE INSTALLATION).
14. ADA PUSHPLATE SHALL BE INTERLOCKED (THROUGH OPTION 873-AD) SUCH THAT THE POWER OPERATOR WILL NOT ENERGIZE IF THE OUTSIDE ADA PUSHPLATE IS ACTIVATED WHEN THE ELECTRIC LATCH IS IN THE LOCKED POSITION.
15. IF THE INSIDE ADA PUSHPLATE IS ACTIVATED, THE DOOR SHALL ALWAYS UN-LATCH AND OPEN.
16. (1) 2-CONDUCTOR #14 SHIELDED (BY OTHERS).
17. PROVIDE SCHLAGE #798-18 ARMORED DOOR CHORD. MOVE CHORD NEAR UPPER HINGE TO AVOID ACCIDENTAL DAMAGE.
18. VON DUPRIN 33A PANIC HARDWARE WITH ELECTRIC LATCH (EL) AND REQUEST-TO-EXIT (RX) OPTIONS. (EL) OPTION NOT REQUIRED FOR INACTIVE LEAF.

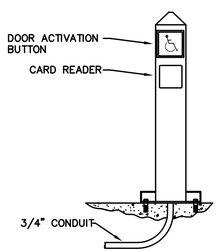

4 | DOOR ADA ACTUATOR

E908 | REF. SCALE: NTS

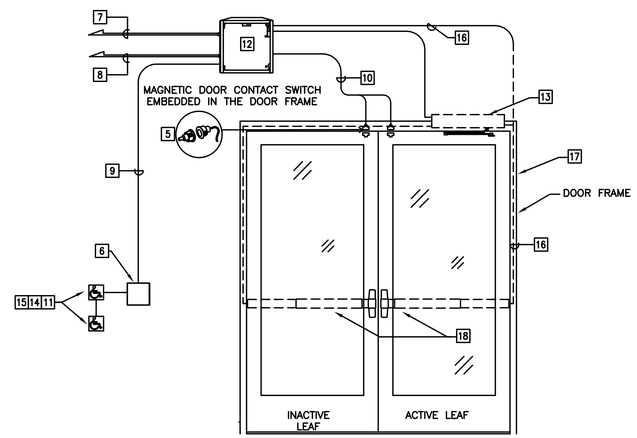

DOUBLE DOOR (PANIC HARDWARE) WITH ADA OPERATOR

5 | DOUBLE DOOR (PANIC HARDWARE) WITH ADA OPERATOR

E908 | REF. SCALE: NTS

PROJECT STATUS

BID SET 04/27/09

ISSUE			
MARK	DATE	DESCRIPTION	INITIAL

DRAWN	S. KANDA	DATE
DESIGNED	N. ZECH	DATE
CHECKED	D. KING	DATE
PROJMGR	J. GRANT	DATE
REQMESTOR	R. SCHULER	DATE
FAGA		DATE
SAFETY		DATE
SUPERVISOR	S FRANKEL	DATE

Ames Research Center
Moffet Field, California

N232 COLLABORATIVE SUPPORT FACILITY
ELECTRICAL DETAILS

SIZE	CAGE CODE		REV
D	25307	A232-0800- E908	
SCALE		INDEX	SHEET OF

DWG: Q:\60348883 - NASA Ames CSF N232\500 CAD\E\Sheet\E908.dwg User: zechn
DATE: Apr 28, 2009 - 10:25:47 am Images: Ok.TIF*?:\My Pictures\Lutron\Lutron Logo (color).bmp*
Xrefs: XBDR

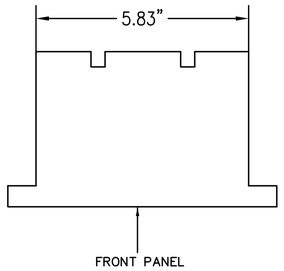

TOP VIEW

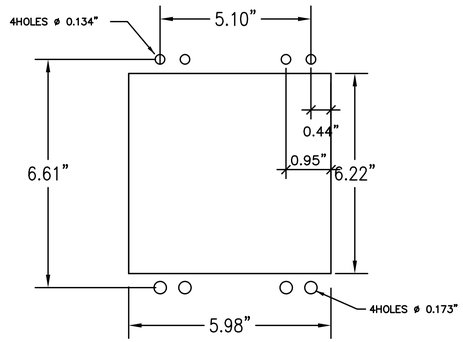

PANEL CUT–OUT

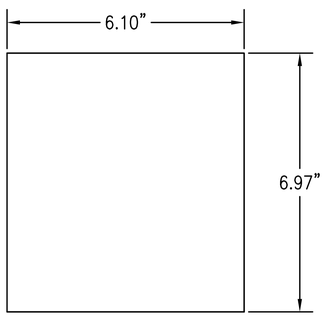

FRONT VIEW

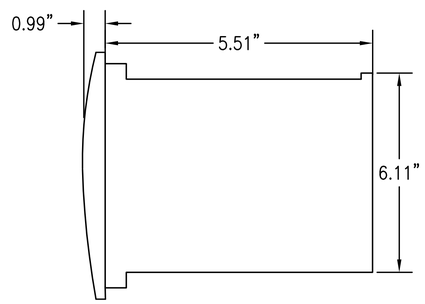

RIGHT SIDE VIEW

1 3–PHASE MICROPROCESSOR BASED ELECTRONIC RELAY INSTALLATION INFORMATION (FLUSH MOUNTING)

E909 REF. SCALE: NTS

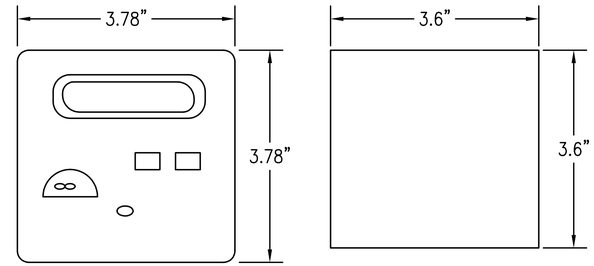

FRONT VIEW

PANEL CUT–OUT

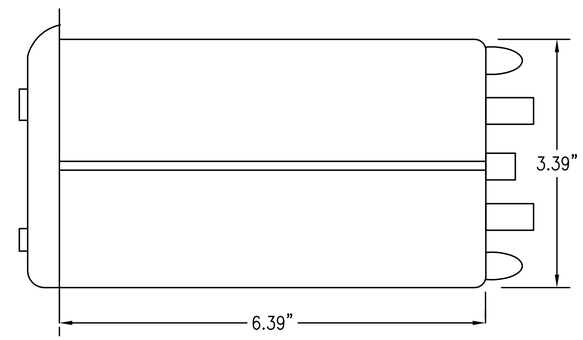

TOP VIEW

2 DIGITAL 3–PHASE (SEE GENERAL NOTE 3) RELAY INSTALLATION INFORMATION (FLUSH MOUNTING)

E909 REF. SCALE: NTS

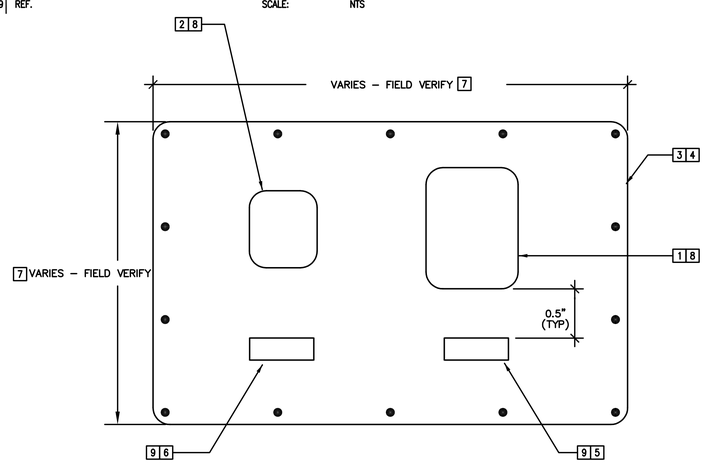

3 TYPICAL PANEL MOUNTING DETAILS (VERTICALLY MOUNTED)

E909 REF. SCALE: NTS

GENERAL NOTES:

1. THESE DRAWING DETAILS AND DIMENSIONS ARE SHOWN FOR GUIDANCE ONLY. CONTRACTOR SHALL BE RESPONSIBLE TO CONFIRM AND PROVIDE DETAILED DRAWINGS FROM EQUIPMENT MANUFACTURER BASED ON ACTUAL EQUIPMENT SUPPLIED BEFORE INSTALLATION INTO EXISTING AND NEW EQUIPMENT.
2. INSTALL NEW GFE UPS UNIT FOR POWER METER INSIDE SWITCHGEAR.
3. FOR NAMEPLATE SCHEDULE, SEE DRAWING E910.

PLAN NOTES:

1. OUTLINE OF NASA AMES STANDARD 3–PHASE MICROPROCESSOR BASED 50/51 ELECTRONIC RELAY UNIT, ALSTOM MICOM P124 (GOVERNMENT FURNISHED & CONTRACTOR INSTALLED EQUIPMENT).
2. OUTLINE OF NASA AMES STANDARD DIGITAL 3–PHASE POWER METER, PML ION7330.
3. PROVIDE NEW ONE–PIECE COVER PLATE WITH MOUNTING SCREWS, OF SUITABLE SIZE TO ADEQUATELY COVER THE EXISTING CUTOUT OPENINGS OF REMOVED RELAYS FROM THEIR RESPECTIVE EXISTING SWGR INSTRUMENT PANELS.
4. NEW COVER PLATE SHALL BE #10 GAUGE STEEL PLATE. PAINTED TO MATCH THE EXISTING OR NEW EQUIPMENT PAINT FINISH.
5. PROVIDE NEW IDENTIFICATION NAMEPLATE TO READ "3Ø, 50/51 – 1, 2, 3 & N".
6. PROVIDE NEW IDENTIFICATION NAMEPLATE. SEE SPECIFICATION 26 23 00 FOR NAMEPLATE DETAILS.
7. EACH PIECE OF EXISTING EQUIPMENT IS DIFFERENT. CONTRACTOR SHALL FIELD VERIFY EACH PIECE OF EQUIPMENT TO DETERMINE COVER PLATE DIMENSIONS PRIOR TO FABRICATION. COVER PLATE SHALL BE LARGE ENOUGH TO COVER EXISTING RELAY OPENINGS OF REMOVED RELAYS AND ACCOMMODATE NEW DEVICES. COVER PLATE SHALL BE AS SYMMETRICAL AS POSSIBLE ON FRONT OF EQUIPMENT AND SHALL NOT HAVE ANY SHARP EDGES.
8. FOR NEW EQUIPMENT, CONTRACTOR SHALL PROVIDE NEW OPENINGS BASED ON DETAIL 1 AND 2 FOR DEVICE MOUNTING AND DEVICE NAMEPLATES.
9. EQUIPMENT/DEVICE NAMEPLATE SHALL BE IN ACCORDANCE WITH ELECTRICAL NOTE 11 ON DRAWING E1 SH. 1.

PROJECT STATUS: BID SET 04/27/09

ISSUE			
MARK	DATE	DESCRIPTION	INITIAL

DRAWN	S. KANDA	DATE
DESIGNED	N. ZECH	DATE
CHECKED	D. KING	DATE
PROJMGR	J. GRANT	DATE
REQUESTOR	R. SCHULER	DATE
RSGA		DATE
SAFETY		DATE
SUPERVISOR	S FRANKEL	DATE

Ames Research Center
Moffet Field, California

N232 COLLABORATIVE SUPPORT FACILITY
ELECTRICAL DETAILS

SIZE	CAGE CODE		REV
D	25307	A232-0800- E909	
SCALE	INDEX	SHEET OF	

DWG: Q:\60046883 – NASA Ames CSF N232\500 CAD\E\Sheet\E909.dwg User: zechn
DATE: Apr 28, 2009 – 10:25:42 am Images:"CM.TIF";\My Pictures\Lutron\Lutron Logo (color).bmp"
Xrefs: XBOR

GENERAL NOTES:

1. MATERICAL 1/16 INCH THICK FORMICA WITH BEVELED EDGES.
2. FASTEN TO PANEL WITH 4-40X3/8" LONG STAINLESS SCREWS. DRILL PANEL WITH #39 DRILL AND TAP.
3. ENGRAVED LINE TO BE 1/2" SHORTER THEN NP LENGTH. ALLOW 9 3/16" OR 6 1/4" CHARACTERS PER INCH.

NAMEPLATE SCHEDULE

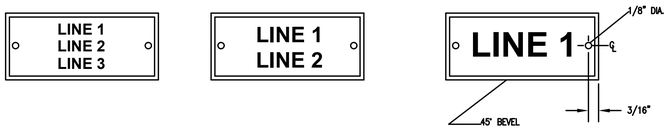

NO.	LINE 1	LINE 2	LINE 3	LINE SIZE	NP SIZE	COLOR CODE
N1	CIRCUIT BREAKER	CLOSED		3/16	1 x 3	BW
N2	CIRCUIT BREAKER	OPEN		3/16	1 x 3	BW
N3	AUTO-MANUAL	SELECTOR SWITCH	DEVICE 43	3/16	1 x 3	BW
N4	CIRCUIT BREAKER	CONTROL SW	DEVICE CS	3/16	1 x 3	BW
N5	LOCKOUT RELAY	HAND RESET	DEVICE 86	3/16	1 x 3	BW
N6	AMES POWER	MONITORING SYSTEM	APMS-148 *	3/16	1 x 3	BW
N7	PHASE & GROUND	OVERCURRENT RELAY	DEV. 50, 51, 50N, 51N, 50GS	3/16	1 x 3	BW
N8	CURRENT	TEST SWITCH	TS-1	3/16	1 x 3	BW
N9	VOLTAGE	TEST SWITCH	TS-2	3/16	1 x 3	BW
N10	SPECIAL NAMEPLATE, SEE DETAIL N10			3/8, 3/4	4 x 6	RW
N11	CIRCUIT BREAKER	VCB 692 *		1/4	1 x 3	BW
N12	INCOMING LINE	VOLTAGE	TRANSFORMER	3/16	1 x 3	BW
N13	CONTROL	POWER	TRANSFORMER	3/16	1 x 3	BW
N14	VCB692 *			1/4	1 x 3	BW
N15	SPECIAL NAMEPLATE, SEE DETAIL N15			VARY	4 x 6	RW

* TYPICAL - AS SHOWN ON DRAWINGS
ALL DIMENSIONS AND SIZES SHOWN ARE IN INCHES

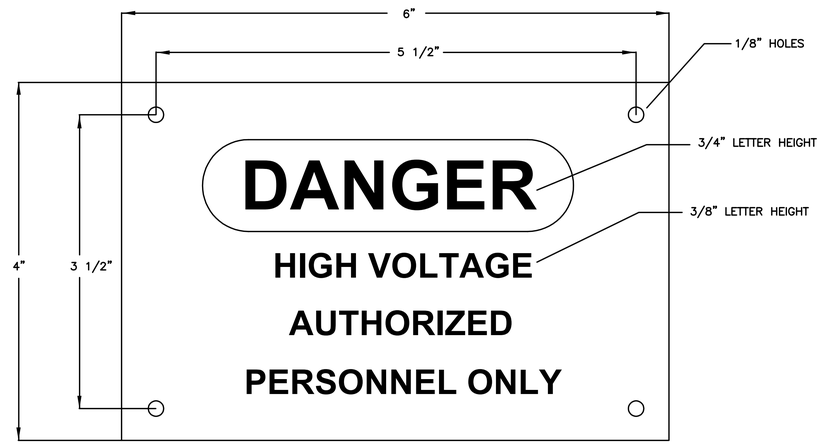

DETAIL "N10"

DETAIL "N15"

PROJECT STATUS

BID SET 04/27/09

ISSUE			
MARK	DATE	DESCRIPTION	INITIAL

DRAWN	S. KANDA	DATE
DESIGNED	N. ZECH	DATE
CHECKED	D. KING	DATE
PROJMGR	J. GRANT	DATE
REQUESTOR	R. SCHULER	DATE
FSQA		DATE
SAFETY		DATE
SUPERVISOR	S FRANKEL	DATE

Ames Research Center
Moffet Field, California

N232 COLLABORATIVE SUPPORT FACILITY
ELECTRICAL DETAILS

SIZE	CAGE CODE			REV
D	25307	A232-0800-	E910	
SCALE		INDEX	SHEET OF	

DWG: Q:\60048883 - NASA Ames CSF N232\500 CAD\E\Sheet\E910.dwg User: zechn
DATE: Apr 28, 2009 - 10:25:38 am Images:"Pictures\Lutron\Lutron Logo (color).bmp"
Xrefs: "X80R

GENERAL NOTES:

1. 50/51 RELAY SHALL BE GOVERNMENT FURNISHED EQUIPMENT (GFE). THE RELAY SHALL BE THE NASA AMES STANDARD ALSTOM MODEL P124 MICROPROCESSOR BASED ELECTRONIC RELAY UNIT.
2. RELAY TO BE MOUNTED AT FRONT PANEL IN NEW BREAKER CUBICLES, AS SHOWN ON THE DRAWINGS.
3. TERMINALS 1–48, 50, 52 AND 54 CURRENT INPUTS SHALL BE WIRED/JUMPERED EXTERNALLY BY THE CONTRACTOR.
4. WIRE NUMBERS SHALL CONSIST OF THE SUPPLY DEVICE/RELAY NUMBER AND A SEQUENTIAL NUMBER (1, 2, 3...) AS REQUIRED.

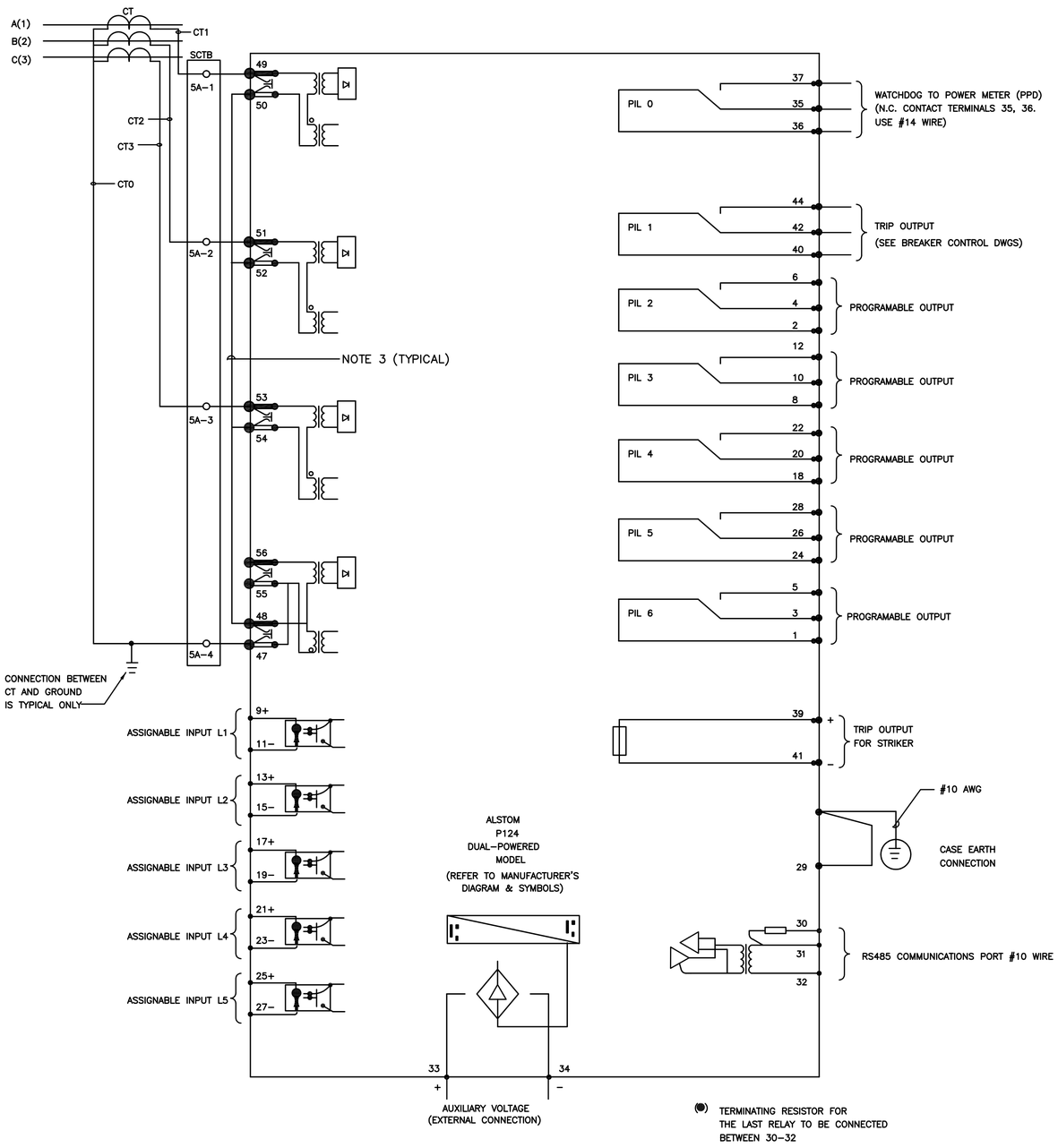

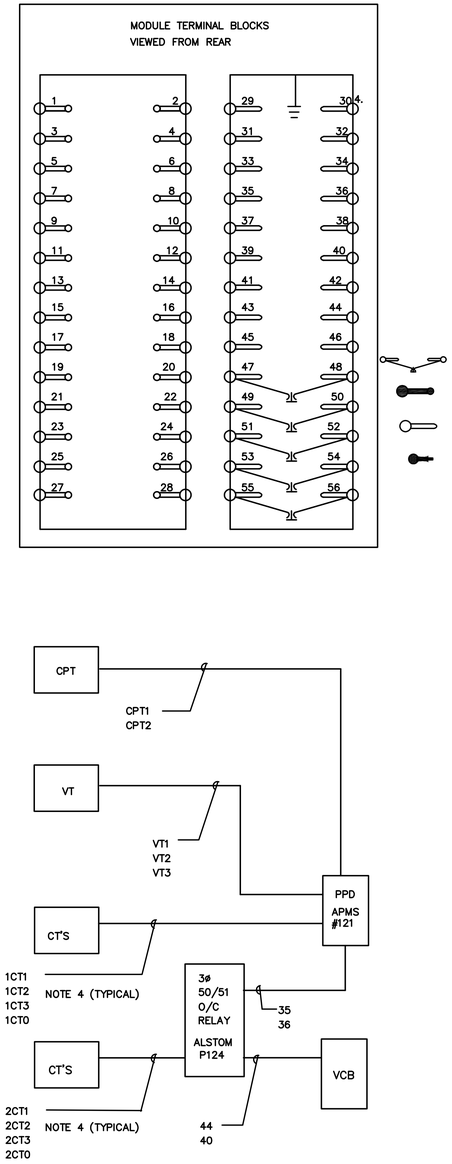

SHEET SYMBOLS

- CT SHORTING LINKS MAKE BEFORE (b) AND (C) DISCONNECT
- SHORT TERMINALS BREAK BEFORE (C)
- LONG TERMINALS
- PINS TERMINALS (pcb TYPE)

1 ALSTOM MICOM P124 50/51 RELAY WIRING DIAGRAM

E911 REF. SCALE: NTS

2 WIRE NUMBERING AND INTERCONNECTION BLOCK DIAGARM

E911 REF. SCALE: NTS

PROJECT STATUS: BID SET 04/27/09

ISSUE			
MARK	DATE	DESCRIPTION	INITIAL

DRAWN	S. KANDA	DATE
DESIGNED	N. ZECH	DATE
CHECKED	D. KING	DATE
PRELIMER	J. GRANT	DATE
REQUESTOR	R. SCHULER	DATE
NSQA		DATE
SAFETY		DATE
SUPERVISOR	S FRANKEL	DATE

Ames Research Center
Moffet Field, California

N232 COLLABORATIVE SUPPORT FACILITY
ELECTRICAL DETAILS

SIZE	CAGE CODE		REV
D	25307	A232-0800- E911	
SCALE	INDEX	SHEET OF	

DWG: Q:\60048683 – NASA Ames CSF N232\500 CAD\E\Sheet\E911.dwg User: zechn
DATE: Apr 28, 2009 – 10:25:30 am Images:"5NB56.JPG"OM.TIF"GENERIC.BMP"F:\My Pictures\Lutron\Lutron Logo (color).bmp"
Xrefs: XBOR

GENERAL NOTES:

1. SEE SHEET E001 AND E002 FOR SYMBOLS, ABBREVIATIONS AND GENERAL NOTES.

PLAN NOTES:

1 INSTALLATION OF GFE EQUIPMENT, TO BE MOUNTED ON SWITCHGEAR.

2 EQUIPMENT/DEVICE NAMEPLATES SHALL BE PER E910.

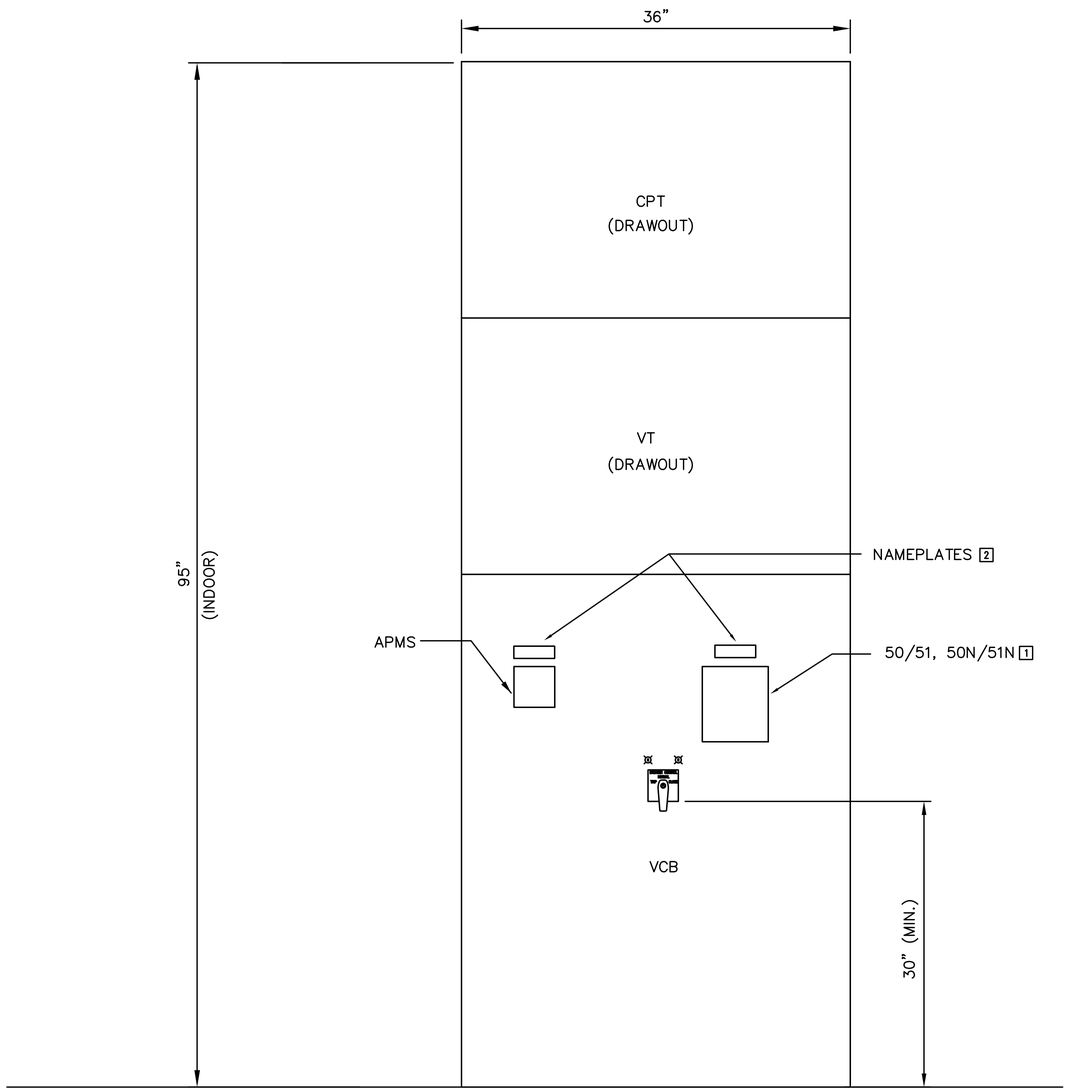

1 MVSG ELEVATION

E912 REF. SCALE: NTS

PROJECT STATUS

BID SET 04/27/09

ISSUE			
MARK	DATE	DESCRIPTION	INITIALS

DRAWN	S. KANDA	DATE
DESIGNED	N. ZECH	DATE
CHECKED	D. KING	DATE
PROJMGR	J. GRANT	DATE
REQUESTOR	R. SCHULER	DATE
RGA		DATE
SAFETY		DATE
SUPERVISOR	S FRANKEL	DATE

Ames Research Center
Moffet Field, California

N232 COLLABORATIVE SUPPORT FACILITY

ELECTRICAL DETAILS

SIZE	CAGE CODE			REV
D	25307	A232-0800-	E912	
SCALE		INDEX	SHEET OF	

DWG: G:\60048883 - NASA Ames CSF N232\500 CAD\E\Sheet\E912.dwg User: zechn
DATE: Apr 28, 2009 - 10:25:25 am Images: 5KB556.JPG"OAL1F"GENERIC.BMP"F:\My Pictures\Lutron\Lutron Logo (color).bmp"
Xrefs: XBDR

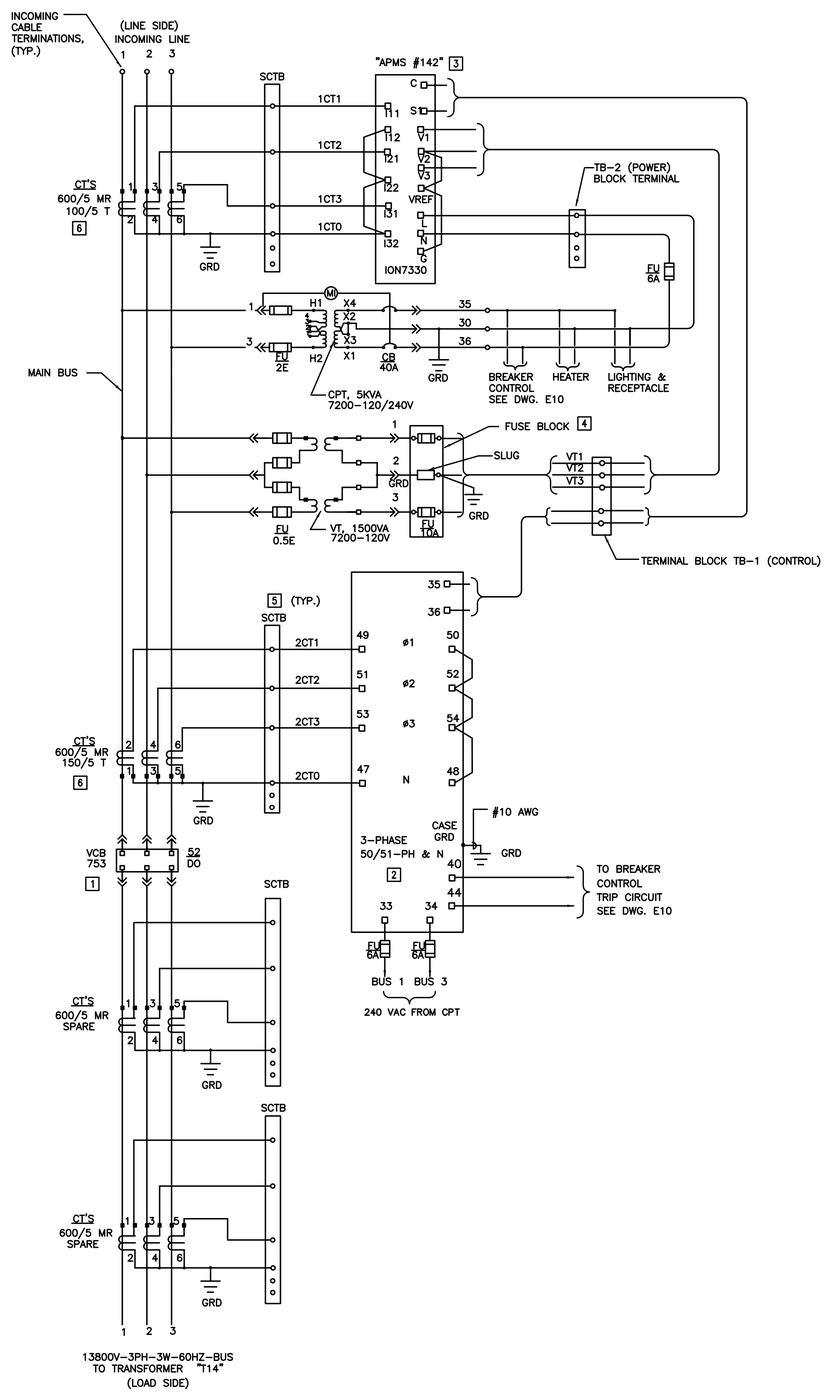

1 THREE LINE DIAGRAM-NEW WORK

E913 REF. SCALE: NTS

GENERAL NOTES:

1. SEE SHEET E001 AND E002 FOR SYMBOLS, ABBREVIATIONS AND GENERAL NOTES.
2. THE DIAGRAM IS PROVIDED FOR GUIDANCE ONLY. THE CONTRACTOR SHALL FIELD VERIFY ALL EXISTING EQUIPMENT INCLUDING TERMINAL BLOCKS, TERMINAL IDENTIFICATION NUMBER, CONNECTIONS ETC. AND REVISE DRAWINGS AS NEEDED TO MATCH EXISTING AND NEW EQUIPMENT TO PROVIDE A COMPLETE FUNCTIONAL SYSTEM.
3. ALL CT WIRES SHALL BE #10 AWG MINIMUM, TYPE SIS. ALL VOLTAGE, CPT SECONDARY AND BREAKER TRIP WIRES SHALL BE #12 AWG MINIMUM, TYPE SIS. UNLESS OTHERWISE NOTED.

PLAN NOTES:

1. PROVIDE NEW 15KV, 1200A SWITCHGEAR WITH 15KV VACUUM CIRCUIT BREAKER AND ACCESSORIES PER SPECIFICATION AND E914.
2. INSTALL ALSTOM RELAY. INSTALLATION SHALL BE IN ACCORDANCE WITH E912.
3. INSTALL DIGITAL POWER METER. INSTALLATION SHALL BE IN ACCORDANCE WITH E909.
4. PROVIDE FUSE BLOCK, FLEXCORE KLK-3 OR APPROVED EQUAL.
5. PROVIDE (4) CIRCUIT SHORTING TERMINAL BLOCK (SCTB), FLEXCORE 1KU6SC OR APPROVED EQUAL.
6. PROVIDE (2) SETS OF 3 WINDOW-TYPE MULTI-RATIO CT'S ON THE LINE SIDE OF THE BREAKER.
   PROVIDE (2) ADDITIONAL SPARE SETS OF CT'S ON THE LOAD SIDE OF THE BREAKER. ALL CT'S SHALL BE C200 ACCURACY.

PROJECT STATUS: BID SET 04/27/09

ISSUE

MARK	DATE	DESCRIPTION	INITIAL

		DATE
DRAWN	S. KANDA	
DESIGNED	N. ZECH	
CHECKED	D. KING	
PRELIMGR	J. GRANT	
REQUESTOR	R. SCHULER	
RAGA		
SAFETY		
SUPERVISOR	S FRANKEL	

Ames Research Center
Moffet Field, California

N232 COLLABORATIVE SUPPORT FACILITY
ELECTRICAL DETAILS

SIZE	CAGE CODE			REV
D	25307	A232-0800-	E913	
SCALE		INDEX	SHEET OF	

DWG: Q:\60048683 - NASA Ames CSF N232\500 CAD\E\Sheet\E913.dwg User: zechn
DATE: Apr 28, 2009 - 10:25:21 am Images: SKB56.JPG"CAL.TIF"GENERIC.BMP"F:\My Pictures\Lutron\Lutron Logo (color).bmp"
Xrefs: XBOR

GENERAL NOTES:

1. SEE SHEET E001 AND E002 FOR SYMBOLS, ABBREVIATIONS AND GENERAL NOTES.
2. THE DIAGRAM IS PROVIDED FOR GUIDANCE ONLY. THE CONTRACTOR SHALL FIELD VERIFY ALL EXISTING EQUIPMENT INCLUDING TERMINAL BLOCKS, TERMINAL IDENTIFICATION NUMBER, CONNECTIONS ETC. AND REVISE DRAWINGS AS NEEDED TO MATCH EXISTING AND NEW EQUIPMENT TO PROVIDE A COMPLETE FUNCTIONAL SYSTEM.
3. NEW TERMINAL MARKINGS ARE BASED ON CUTLER HAMMER INFORMATION.

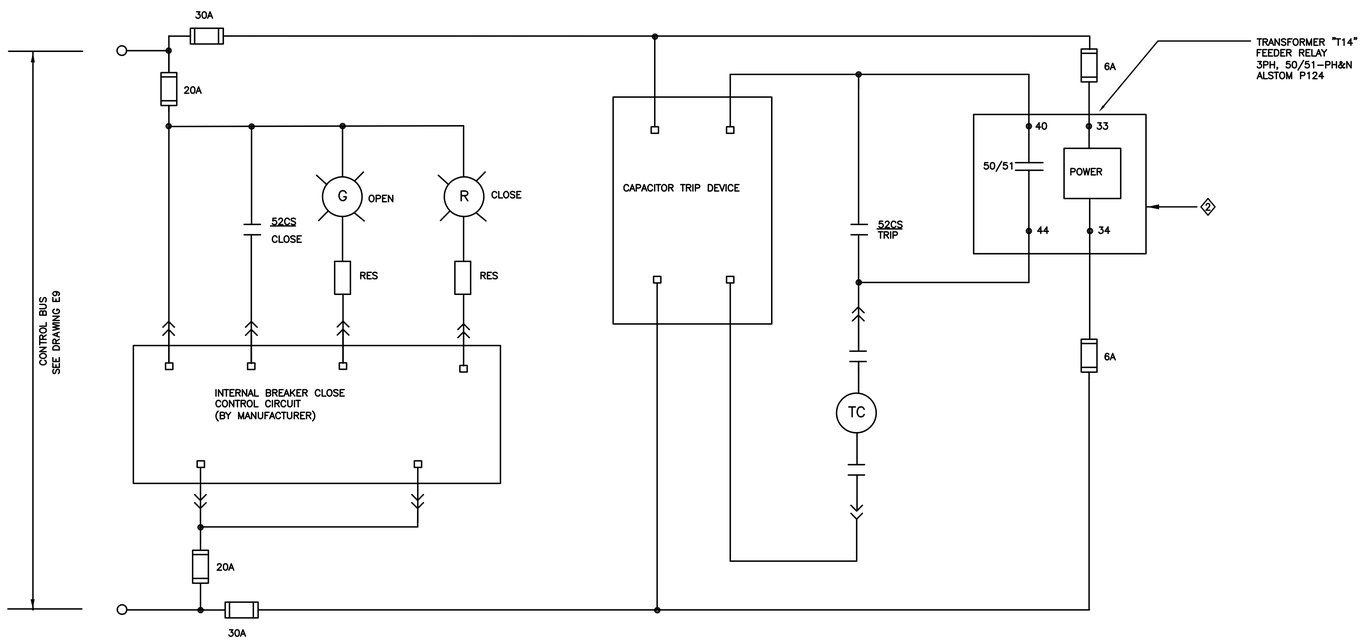

1 VCB753 BREAKER CONTROL DIAGRAM – NEW WORK

E914 REF. SCALE: NTS

PROJECT STATUS

BID SET 04/27/09

MARK	DATE	DESCRIPTION	INITIAL

		DATE
DRAWN	S. KANDA	
DESIGNED	N. ZECH	
CHECKED	D. KING	
PROJMGR	J. GRANT	
REQUESTOR	R. SCHULER	
RAGA		
SAFETY		
SUPERVISOR	S FRANKEL	

Ames Research Center
Moffet Field, California

N232 COLLABORATIVE SUPPORT FACILITY
ELECTRICAL DETAILS

SIZE	CAGE CODE		REV
D	25307	A232-0800- E914	
SCALE		INDEX	SHEET OF

DWG: Q:\60048683 – NASA Ames CSF N232\500 CAD\E\Sheet\E914.dwg User: zechn
DATE: Apr 28, 2009 – 10:25:17 am Images: SKB56.JPG"CAL.TIF"GENERIC.BMP"F:\My Pictures\Lutron\Lutron Logo (color).bmp"
Xrefs: 7KBXR