STANDARD QUALITY ASSURANCE PLAN FOR STEEL SPECIAL MOMENT FRAMES

I. PURPOSE

The Standard Quality Assurance Plan (hereinafter referred to as "Standard QA Plan") for steel moment frames provides specifications, procedures, and illustrative details to comply with the requirements of the Building Code.

II. DEFINITIONS

Owner:	The Government
Engineer Of Record:	Engineer hired by the Government
Structural Observer:	Engineer or Inspector designated by the Engineer of Record or the Contracting Officer
Inspector or Deputy:	Inspector hire by the Government
Building Department:	NASA AMES Construction Permit Office
Special Inspectors:	Inspectors hired by the Government
Contracting Officer:	Representative of Government

III. GENERAL REQUIREMENTS

1. Referenced Documents
   The design and construction of steel moment frames shall be in compliance with the following:
   a. AISC 341 Seismic Provisions for Structural Steel Buildings, Part I and Part II, dated March 9, 2005 (hereinafter referred to as "AISC Seismic"). including appendix "Q" appendix "X" and appendix "W"
   b. AWS D1.1/D1.1M:Current version
   c. AWS D1.8: Current version
   d. AWS B5.1: Current version

2. Material Specifications
   a. Structural steel shall comply with the following ASTM standard specifications:
      i. Wide flange shapes.....ASTM A572 (50), A913 (50), A992
      ii. Continuity, doubler and column base plates..... A529 (50)
      iii. Anchor bolts at column base plates.....ASTM F1554 (55ksi)
      v. Steel having dual ASTM designation shall be clearly identified on each specific plan detail.
   b. High strength bolts shall comply with the following requirements and ASTM standard specifications:
      i. High strength bolts, nuts, and washers.....ASTM A325.
      ii. Installed bolts in accordance with the "Specifications for Structural Joints using ASTM A325 or A490 Bolts."
      iii. Tighten bolts to a snug tight condition that is at least the minimum proper tension and verify using a calibrated tension measuring device.
      iv. Slip critical high strength bolts are required.
      v. All faying surfaces of connections with high strength fasteners shall be prepared as required for Class A per the AISC Seismic Section 7.2.
   c. Filler metal properties and specifications shall be as follows:
      i. Electrodes shall be of a low-hydrogen type conforming to AWS specifications as referenced in Table 7 on Sheet S004.
      ii. Filler metals shall be classified for nominal 70 ksi tensile strength.
      iii. The maximum permitted electrode diameter shall be in accordance with Table 5 on Sheet S004.
      iv. Filler metals shall have a minimum Charpy V-Notch (CVN) toughness of 20 ft-lbf at -20°F using AWS A5 classification test methods.
      v. The use of intermixed welds shall not occur.
      vi. The parameters established by the electrode manufacturer shall be reflected in the approved WPS.
3. Welding Processes
   All shop or field welding shall be limited to the shielded metal arc welding or flux cored arc welding processes.
4. Base Metal Repairs Or Restorations
   Any repair or restoration of base metal shall comply with all of the following:
   a. Engineer of Record shall review and approve the wps for repair procedures prior to welding.
   b. Ensure that repair procedures meet the requirements outlined in AWS D1.1 section 5.26 and ASTM A6/A6M-02 section 9.2, 9.3, 9.4 and 9.5.
   c. All welding shall be performed using low-hydrogen process or with Smaw using low-hydrogen electrodes.
   d. Provide continuous visual inspection by the Special Inspector.
   e. Provide non-destructive testing upon completion of the repair work.

5. Deviations From The Standard Quality Assurance Plan
   Deviations from any part of the standard qa plan may be made provided the procedures outlined below are followed:
   a. Deviations from the standard QA plan must be reviewed and approved by the Contracting Officer.
   b. Submit the proposed deviations from the standard QA plan to the Contracting Officer for review and approval prior to commencement of work.
   c. Supplemental testing and additional specifications may be required to justify the deviation. Supplemental testing if required shall be performed at no cost to the government.
   d. Conformance with all applicable provisions of the AISC, and AWS is required.

IV. QUALITY ASSURANCE

1. Certification
   a. Inspectors shall be certified special inspectors.
   b. Welders shall be certified welders.
   c. Technicians performing Non Destructive Testing (NDT) shall be certified.
   d. QA welding inspector shall be by AWS and approved by the Contracting Officer.
2. Pre-Construction Meeting
   a. The Owner (or owner's representative) shall arrange a pre-construction meeting(s) with the Engineer of Record (or Structural Observer designated by the Engineer of Record), the Contractor (or affected Sub-Contractor), and the Special Inspector to discuss and review welding procedures, bolting procedures, and inspection requirements for all welding and bolting operations.

3. Structural Observation
   The Structural Observer shall:
   a. Perform structural observation listed in Table 6 on Sheet S004.
   b. Perform structural observation prior to placement of decking, encasement in concrete or placement of other finishes.
   c. State in the report that the steel moment frame system substantially conforms with the approved structural plans and specifications.

4. Special Inspection
   The following are the basic Quality Assurance responsibilities of the special Inspectors:
   a. Visual inspections are required and shall be per Appendix Q of the AISC 341-05 Seismic Provisions.
   b. Verify that each steel piece is labeled with the approved fabricator's shop name.
   c. Visual check shop welds, joint preparation, faying surfaces, indentation stamps and color codes of high strength steel, excessive mill scale or lamination, and dimensional conformity with the approved plans.
   d. Before any welding begins, inspect joint preparation, fit-up, condition of surfaces to be welded, storage and use of electrodes, current license of all welders, and voltage/amperage of welding machines.
   e. Ensure that all welding and inspection activities complies with AWS.
   f. Measure voltage/amperages near the arc with a hand held calibrated averaging type meter. The meter shall be calibrated not less than once a year. This equipment shall be used by the Fabricator, Erector, and special Inspector.
   g. During welding operation, provide continuous inspection particularly on multiple pass welds to assure that each pass has been prepared correctly, preheat and interpass temperatures are maintained and that finished welds shall be the correct size and without rejectable discontinuities.
   h. Mark steel near the weldment to indicate that inspection was made.
   k. Verify type and size of bolts and washers, check mill certificates, and verify faying surfaces are free of burrs, scale, rust, grease or anything that may inhibit full contact.
   l. Verify connections involving high strength bolts and welds are fabricated per Part III Item 2(b) and 2(c) and erected in a sequence per Part V Item 2, unless specified otherwise by the Engineer of Record.
   m. Verify high strength bolts are not welded or damaged by preheating.
   n. Verify washers are always installed with all bolts, except A490 bolts which require washers under both elements.
   o. Verify that any deficiency noted in the Structural Observation Report Form has been corrected.
   p. Verify that the Contracting Officer has approved the written Welding Procedure Specification (WPS) prepared by the Fabricator or Erector. The WPS shall include the following:
      i. All applicable requirements from the codes, the Standard QA Plan, and any other information necessary to produce the welds.
      ii. List the applicable base metal types and thicknesses.
      iii. List the welding joint detail, including joint type, weld type, joint geometry, and applicable dimensions. Individual weld passes shall be identified in sketches and numbered to identify the sequence of their deposition (see Detail 13 on S006 for example). The sketches shall identify the maximum layer thicknesses and bead widths. In no case shall layer thicknesses exceed 1/4 inch nor shall the maximum bead widths exceed 5/8 inch.
      iv. List the welding processes.
      v. Specify the required welding positions.
      vi. List the filler metal per AWS for electrode specification and classification (see Table 7 on S004), as well as information regarding shielding material to be used.
      vii. Indicate the minimum preheat and interpass temperatures (see Table 4 on S004) and post weld heat treatment per Part V Item 5.
      viii. List all applicable electrical characteristics for the welding process employed. WPS shall clearly indicate the specific values required for each welding pass. These electrical characteristics shall include at minimum the following:
         (1) Electrode diameter (see Table 5 on S004),
         (2) Type of current, and acceptable ranges of current measured in amperage,
         (3) Voltage,
         (4) Travel speed (range), and
         (5) Amperage, voltage and electrode extension (as applicable)
         shall be within the filler metal manufacturer's recommendations.
      ix. A copy of the electrode manufacturer's technical information with ID # listed shall be attached to the WPS.
      x. Report on post-weld post-heat treatment.
   q. Weld joints not conforming to AWS D1.1 Chapter 3 prequalified welding joints must be tested by an approved testing agency, accepted by the Contracting Officer. This testing shall be done at no cost to the government.
   r. Notify the contractor and contracting officer of any deviations or non-compliance with the approved WPS, plans or specifications.

5. Electrode Storage and Atmospheric Exposure
   a. Electrodes are considered to be exposed to the atmoshpere if:
      i. The manufacturer's sealed electrode containers or packagings are opened or damaged, or
      ii. Outside of baking or storage ovens.
   b. Modification or lubrication of electrodes are not permitted.
   c. Drying of electrodes in baking or storage ovens are permitted as recommended by the manufacturer.
   d. Electrodes shall be identified to facilitate monitoring of total atmospheric exposure time.
   e. Storage and atmospheric exposure of AWS A5.1 and A5.5 current versions low-hydrogen SMAW electrodes shall be in accordance with AWS Section 5.3.2.
   f. FCAW electrodes not consumed within 24 hrs of accumulated atmospheric exposure time shall not be used. Manufacturer's recommendations that show that drying effectively removes moisture and restores electrodes to their designated diffusible hydrogen levels are permitted.
   g. FCAW electrode welding suspended more than 8 hrs shall be removed from the machines and stored in an electrode wire baking or storage oven maintained at a temperature between 250° and 550°F, or as recommended by the electrode manufacturer.

6. Plastic Hinging Zone Protection
   a. The plastic hinging zone shall be identified diagrammatically, as illustrated in Detail 15 on S006.
   b. The Contracting Officer and Contractor shall be responsible for reviewing shop drawings of ALL relevant trades to ensure compliance and general conformance to the drawings This shall be discussed and documented in pre-construction meetings.
   c. The Contractor shall be responsible for developing a program to ensure that all workers on the project, including their subcontractors, are aware of and understand this requirement. Failure to comply with these requirements may cause the replacement of steel.
   d. Plastic hinging zones shall be defined by permanent markings such as paint or ink.
   e. Welded, bolted, screwed, or shot-in (powder driven) attachments for perimeter edge angles, shear studs, exterior facades, partitions, duct work, piping, or other connections shall not be permitted within the plastic hinging zones.
   f. Any penetrations or damage from temporary welded attachments within the plastic hinging zones shall be reported to the Contracting Officer and comply with part III.
   g. Initially, the plastic hinging zone "Warning Sign", as illustrated in Detail 15 on S006, may be temporary. However, the temporary "Warning Sign" shall be replaced by a permanent "Warning Sign" before project completion. This sign and identification of the plastic hinging zone shall be maintained during construction; and may require repair if damaged.
   h. Signs shall be affixed to the beam and located within the plastic hinging zone.the contracting officer may accept alternate methods of attaching the "Warning Sign" to the plastic hinging zones.
7. Additional Charpy V-Notch Toughness
   Welds at the locations indicated below shall be made with filler metal having a CVN toughness of 20 ft-lbf at -20°F AND 40 ft-lbf at 70°F as determined by test procedure prescribed in the AISC Seismic Appendix X "Weld Metal / Welding Procedure Specification Toughness Verification Test."
   a. Beam flanges to columns,
   b. Single plate shear connections to columns,
   c. Beam webs to columns, and
   d. Column splices.
8. Non-Destructive Testing (NDT) Requirements
   NDT for quality assurance shall be performed by special inspectors hired by the government.
   a. The minimum non-destructive testing at each weld joints or parts shall be conducted at the locations and frequencies as specified in Table 2 and Table 3 on S004 respectively.
   b. A copy of each NDT report shall be provided to the Contractor. 3 copies to the Contracting Officer with the following information:
      i. Document the accepted and rejected welds, parts, or joints.
      ii. Identify the tested weld by piece mark and location in the piece.
      iii. Identify the tested weld location in the structure.
   c. NDT Technician shall perform the following tasks:
      i. Coordinate the NDT scope and schedule with the Deputy Inspector.
      ii. Perform NDT in a timely manner (so as not to hinder construction work) and to detect welding problems soon after occurrence so that corrective measures can be taken by the Contractor.
      iii. Mark the inspected and accepted welds, parts, and joints with a distinguishing mark or die stamp.
   d. Reduction Rate for NDT
      i. The rate of UT testing on CJP groove welds may be reduced if approved by the Engineer of Record and the contracting officer. The NDT rate for an individual welder or welding operator may be reduced to 25%%%, provided the reject rate is demonstrated to be 5%%% or less of the welds tested for the welder or welding operator. A sampling of at least 40 completed welds for a job shall be made for such reduction evaluation.
      ii. The rate of MT testing on CJP groove welds may be reduced if approved by the engineer of record and the contracting officer. The MT rate for an individual welder or welding operator may be reduced to 10%%%, provided the reject rate is demonstrated to be 5%%% or less of the welds tested for the welder or welding operator. A sampling of at least 20 completed welds for a job shall be made for such a reduction evaluation. This reduction is not permitted on welds in the k-area, at repair sites, weld tab and backing removal sites and access holes.
      iii. Reject rate shall mean the number of welds containing rejectable defects divided by the number of welds completed.
9. Documentations
   The reports listed in Table 1 on S004 shall be submitted to the Contracting Officer in a timely manner.

V. WELDING PROCEDURES

1. Bottom Beam Flange Moment Connection Welding
   Where welding of the bottom beam flange to the column flange is in the flat welding position, welding shall be completed with the following sequence:
   a. Start welding from Side A (one side of the beam) with a maximum 1/4 inch thick root pass beyond the center of the joint on Side B (other side of the beam), reaching past the beam web through the weld access hole.
   b. After the arc is initiated, electrode travel shall progress toward the edge of the Side A beam flange, terminating on the Side A weld tab.
   c. The Side A root pass, and the root pass deposit on Side B, shall be thoroughly cleaned to allow the Special Inspector to verify that the resulting bead profile is suitable for obtaining good fusion by the subsequent root pass to be initiated from Side B. If the profile is not conducive to good fusion, the start of the first root pass shall be grounded, gouged, chipped, or otherwise prepared to ensure adequate profile to achieve fusion.
   d. Complete the root pass on Side B before any other weld passes are performed.
   e. The arc shall be initiated at the start of the first Side A root pass, and electrode travel shall progress toward the edge of the Side B beam flange, terminating on the Side B weld tab.
   f. The above sequence shall be repeated for subsequent weld layers, and each weld layer shall be completed on both sides of the joint before a new layer is deposited. The order of operations (Side A, then Side B, or vice versa) is not restricted and may vary for each weld layer. Weld passes shall be placed in horizontal layers. Each pass shall be thoroughly cleaned of slag and wire brushed. Each pass shall be visually inspected by the Special Inspector, as described above in Step (c).
   An alternate welding sequence may be made provided the Welder or Contractor submits in writing an alternate sequence that is approved by the Contracting Officer.
2. Sequence for Welding at Multiple Locations
   When welding occurs at multiple locations of welded steel moment frame connections, the following sequence shall be followed:
   a. Weld both top and bottom beam flanges prior to any supplemental welding to the beam web or shear tab.
   b. Contracting Officer shall review and approve all field welding sequences prior to the start of work.
   c. Field welding of web shear plates with bolts shall occur after field welding of beam flanges to column flange.
   d. High strength bolts shall be in the snug tight condition prior to welding.
   e. Notwithstanding AISC LRFD Specification Section J1.9 to the contrary, high strength bolts shall be fully tensioned upon completion of all welding activities.

3. Welding Technique
   a. Stringer beads shall be used during all welding operations. Maximum bead width, bead thickness, and layer thickness shall be considered. Weaving is not permitted, except when the WPS approved by the Engineer of Record limits electrode oscillation transverse to the weld axis to a maximum of:
      i. 3d for 1G/1F, 2G/2F, and 4G/4F weld positions, or
      ii. 5d for the 3G/3f position, where d = electrode diameter.
   b. Welding layers should progress from the face of the column flange outward toward the groove face of the beam flange as illustrated in Detail 13 on S006.

4. Preheat and Interpass Temperature
   a. The minimum preheat and interpass temperature requirements in Table 4 of S004 shall be observed. Special attention shall be given to AWS Section 3.5.1 and Section 5.6 for the thickness of the base metal to be welded.
   b. Preheat and all subsequent interpass temperatures shall be maintained during the welding operation for a distance at least equal to the thickness of the thicker welded part, but not less than 3", in all directions from the point of welding.
   c. Where base metals are of different thickness, the higher minimum preheat and interpass temperature requirements of the thicker plate shall govern.
   d. Maximum preheat and interpass temperature shall not exceed the lesser of:
      i. 550°F, or
      ii. The maximum temperature recommended by the electrode manufacturer.

5. Post Weld Heat Treatment
   Unless specified otherwise in an approved WPS, the minimum post weld heat treatment shall be provided as follows:
   a. Apply temperature in the 400°F to 600°F range immediately after completion of welding to prevent the weld metal from cooling below the minimum preheat and interpass temperature.
   b. Maintain temperature for approximately 1 hour per inch of thickness of weld metal or 2 hours, whichever is less.
   c. Conditions specified in AWS Section 3.14 and Section 5.8 should carefully be considered when applying post weld heat treatment.
   Alternatively, the use of insulating blankets after the completion of welding in lieu of post weld heat treatment may be permitted to control the cooling of the welded connection to ambient temperature if recommended by the Engineer of Record and approved by the contracting officer unless required otherwise by an approved WPS.

VI. WELDING AND FABRICATION DETAILS

1. Base Metal Joint Preparation
   a. Base metal preparation shall be in comply with AWS Section 5.15.
   b. All beam flange to column flange welds are to be made with an AWS prequalified CJP groove welded joint detail.
   c. Bevel, fit-up and detail tolerances shall be as required by the selected prequalified welded joint detail.
   d. Use the AWS prequalified CJP groove welded joint detail as illustrated in Detail 14 on S006 and the following:
      i. Use single bevel CJP groove welds made with a 30° groove angle or double bevel CJP groove welds when flange thickness exceed 1-1/2 inch.
      ii. "As Fit-Up" and "As Detailed" shall be the maximum tolerances.
      iii. Meet all prequalified WPS variables in Table 5 on S004.
2. Weld Access Hole
   a. Where weld access holes are provided, they shall be detailed as illustrated in Detail 12 on S006.
   b. Notches and gouges shall be repaired following a WPS approved by the Contracting Officer.
   c. Weld access holes shall be prepared by grinding to a suitable finish in accordance with AISC LRFD Specification Section J1.6 and provided with a minimum radius of 3/8 inch as illustrated in Detail 12 on S006.
3. Backing Bar
   a. Backing bar used in connections with a CJP groove weld of beam flange to column flange shall be removed except that top flange backing bar attached to the column by a continuous fillet weld on the edge below the CJP groove weld need not be removed.
   b. Following removal of backing bar, the root pass shall be backgouged to sound weld metal, and back welded. A reinforcing fillet weld with a minimum leg size of 5/16 inch or the root opening plus 1/16 inch, whichever is larger, shall be provided. The reinforcing fillet weld need not be grounded.
   c. When backing bar is other than AWS Table 3.1 and Section 5.2.2 approved base metal is used, the following shall apply:
      i. Ceramic, flux or glass tape may be used provided the manufacture's recommendations are followed.
      ii. When a non-metallic backing bar is used, the WPS and the Welder shall be qualifed using the type of backing bar intended for welding.
      iii. Nonferrous metallic (e.g. copper) backing materials are not permitted.

4. Weld Tab
   a. Weld tabs shall be aligned parallel to the joint preparation.
   b. No weld dams are allowed.
   c. Weld tabs shall extend beyond the edge of the joint a minimum distance equal to the part thickness, but not less than one inch.
   d. Weld tab shall be removed upon completion of the welded joint as follows:
      i. No more than 1/8 inch beyond the edge of the joint shall remain, except at continuity plate where up to 1/4 inch is acceptable.
      ii. Edges of the weld tab shall be finished to a surface roughness value of 500 micro inch or better. Grinding to a flush condition is not required.
   e. Gouges and notches are not permitted. The transitional slope of any area where gouges and notches have been removed shall not exceed 1:5.
   f. Material removed by grinding that extends more than 1/16 inch below the surface of the base metal shall be filled with weld metal. The contour of the weld at the ends shall provide a smooth transition, free of notches and sharp corners.

5. Continuity Plate
   a. Continuity plates shall be detailed as illustrated in Detail 8 on S006.
   b. The weld attaching the continuity plate to the column flange shall be as follows:
      i. Use a CJP groove weld for the full length of the groove preparation.
      ii. When backing bars are omitted, the root shall be backgouged and back welded.
      iii. When backing bars are used and remain in place, backing bars shall be attached to the column flanges with a reinforcing fillet weld.
      iv. Fillet weld shall not be used to connect backing bars to continuity plates.
      v. The fillet weld size need not exceed the minimum size requirements of AWS Table 5.8.
   c. Weld terminations near the end of the column flange tips may be completed using weld tabs as follows:
      i. Weld tabs may be steel or nonfusible material.
      ii. Weld terminations near the radius of the column need not be made using weld tabs. The use of small nonfusible weld tabs to assist in weld terminations is permitted.
      iii. Weld tabs shall be removed following completion of welding.
   d. Continuity plates may be welded to the column web with groove welds, fillet welds, or a combination of the two. Fillet welds shall terminate a minimum distance of 1/4 inch from each end of the joint.

6. Doubler Plate
   Web doubler plates shall be welded according to Details 2, 3, 4, 5 and 9 on S006.

7. Requirements for "k" Area
   Welds shall terminate short of the "k" area for continuity plates as illustrated in Detail 8 on S006.

A

PROJECT STATUS

BID SET 05/26/09

ISSUE			
A	5/26/09	REVISED NOTES	JN
MARK	DATE	DESCRIPTION	INITIAL

DRAWN	J NAGANO	DATE
DESIGNED	J LIVERMORE	DATE
CHECKED	N SHAH	DATE
PROJMGR	J GRANT	DATE
REQUESTOR	R SCHULER	DATE
R&QA		DATE
SAFETY		DATE
SUPERVISOR	S FRANKEL	DATE

Ames Research Center
Moffet Field, California

N232 COLLABORATIVE SUPPORT FACILITY

STANDARD QUALITY ASSURANCE PLAN FOR SPECIAL MOMENT FRAMES

SIZE	CAGE CODE		REV
D	25307	A232-0800- S002	A
SCALE		INDEX	SHEET OF

5/22/2009 9:26:42 AM

LIST OF SPECIAL INSPECTION	YES	NO	N/A
FOUNDATION:			
A. GRADING AND FILLING AND CUT OPERATION PER SOILS REPORT	X		
B. FILL MATERIAL ACCEPTANCE TEST, COMPACTION CONTROL	X		
BEARING CAPACITY OF COMPACTED FILL	X		
CONCRETE:			
A. DURING THE TAKING OF TEST SPECIMENS	X		
PLACING OF REINFORCED CONCRETE	X		
B. SHOTCRETE			X
C. BOLT INSTALLED IN CONCRETE	X		
REINFORCING STEEL & PRE-STRESSING:			
A. DURING PLACING OF REINFORCING, TENDONS & PRE-STRESSED STEEL	X		
B. DURING STRESSING OF POST TENSIONED CONCRETE ELONGATE JACKING FORCE LIFT-OFF FOR EVERY 18TH TENDON			X
C. SAMPLE AND TEST BAR STEEL & POST-TENSION CABLE	X		
STRUCTURAL MASONRY			
A. DURING PREPARATION AND TAKING OF PRISM OR TEST SPECIMENS	X		
B. PLACING OF ALL MASONRY UNITS, REINFORCEMENT, GROUTING AND MASONRY PRISM TEST	X		
STRUCTURAL STEEL:			
A. MILL REPORTS AND IDENTIFICATION OF STEEL (AFADAVIT OF COMPLIANCE)	X		
B. SAMPLING AND TESTING OF SPECIMEN	X		
WELDING:			
A. ALL STRUCTURAL WELDING (INCLUDES DECKING AND WELDED STUDS)	X		
B. ULTRASONIC TESTING OF FULL PENETRATION WELD CONNECTIONS AT MOMENT FRAMES, BRACED FRAMES, BEAM SPLICES, AND FIELD WELDS	X		
C. STRUCTURAL LIGHT GAGE METAL FRAME WELDING	X		
D. REINFORCING STEEL WELDING PER CBC 1704.4.2	X		
BOLT:			
A. HIGH STRENGTH BOLT A325SC & A490SC (TENSION VERIFICATION)	X		
B. HIGH STRENGTH BOLT A325N & A490N (SNUG CONTACT OF PLYS)	X		
C. EXPANSION/ ADHESIVE ANCHORS IN CONCRETE OR MASONRY INSTALLATION AND TESTING	X		
D. ANCHOR BOLTS AT CONCRETE WALLS AND BRACED FRAMES. (BOLT INSTALLATION AND CONCRETE PLACEMENT)	X		

TABLE 1704.3: VERIFICATION AND SPECIAL INSPECTION OF STEEL ELEMENTS OF BUILDING

VERIFICATION AND INSPECTION	CONTINUOUS	PERIODIC	REFERENCED STANDARD a.	IBC REFERENCE
1. MATERIAL VERIFICATION OF HIGH-STRENGTH BOLTS, NUTS AND WASHERS:				
A. IDENTIFICATION MARKINGS TO CONFORM TO ASTM STANDARDS SPECIFIED IN THE APPROVED CONSTRUCTION DOCUMENTS.	—	X	APPLICABLE ASTM MATERIAL SPECIFICATIONS; AISC 360, SECTION A3.3	—
B. MANUFACTURER'S CERTIFICATE OF COMPLIANCE REQUIRED.	—	X	—	—
2. INSPECTION OF HIGH-STRENGTH BOLTING:				
A. BEARING TYPE CONNECTIONS.	—	X	AISC 360, SECTION M2.5	1704.3.3
B. SLIP-CRITICAL CONNECTIONS.	X	X		
3. MATERIAL VERIFICATION OF STRUCTURAL STEEL:				
A. IDENTIFICATION MARKINGS TO CONFORM TO ASTM STANDARDS SPECIFIED IN THE APPROVED CONSTRUCTION DOCUMENTS.	—	—	ASTM A 6 OR ASTM A 568	1708.4
B. MANUFACTURERS' CERTIFIED MILL TEST REPORTS.	—	—	ASTM A 6 OR ASTM A 568	
4. MATERIAL VERIFICATION OF WELD FILLER MATERIALS:				
A. IDENTIFICATION MARKINGS TO CONFORM TO AWS SPECIFICATION IN THE APPROVED CONSTRUCTION DOCUMENTS.	—	—	AISC 360, SECTION A3.5	—
B. MANUFACTURER'S CERTIFICATE OF COMPLIANCE REQUIRED.	—	—	—	—
5. INSPECTION OF WELDING:				
A. STRUCTURAL STEEL:	—	—		
1) COMPLETE AND PARTIAL PENETRATION GROOVE WELDS.	X	—	AWS D1.1	1704.3.1
2) MULTIPASS FILLET WELDS	X	—		
3) SINGLE-PASS FILLET WELDS > 5/16"	X	—		
4) SINGLE-PASS FILLET WELDS <= 5/16"	—	X		
5.) FLOOR AND ROOF DECK WELDS.	—	X	AWS D1.3	—
B. REINFORCING STEEL:	—	—	AWS D1.4 ACI 318: 3.5.2	—
1) VERIFICATION OF WELDABILITY OF REINFORCING STEEL OTHER THAN ASTM A 706	—	X		
2) REINFORCING STEEL-RESISTING FLEXURAL AND AXIAL FORCES IN INTERMEDIATE AND SPECIAL MOMENT FRAMES, AND BOUNDARY ELEMENTS OF SPECIAL REINFORCED CONCRETE SHEAR WALLS AND SHEAR REINFORCEMENT.	X	—		
3) SHEAR REINFORCEMENT.	X	—		
4) OTHER REINFORCING STEEL.	—	X		
6. INSPECTION OF STEEL FRAME JOINT DETAILS FOR COMPLIANCE WITH APPROVED CONSTRUCTION DOCUMENTS:		X	—	1704.3.2
A. DETAILS SUCH AS BRACING AND STIFFENING.	—	—		
B. MEMBER LOCATIONS	—	—		
C. APPLICATION OF JOINT DETAILS AT EACH CONNECTION	—			

FOR SI: 1 INCH= 25.4 MM.
a. WHERE APPLICABLE, SEE ALSO SECTION 1707.1, SPECIAL INSPECTION FOR SEISMIC RESISTANCE

TABLE 1704.4: REQUIRED VERIFICATION AND INSPECTION OF CONCRETE CONSTRUCTION

VERIFICATION AND INSPECTION	CONTINUOUS	PERIODIC	REFERENCED STANDARD a.	IBC REFERENCE
1. INSPECTION OF REINFORCING STEEL, INCLUDING PRESTRESSING TENDONS, AND PLACEMENT.	—	X	ACI 318: 3.5, 7.1-7.7	1913.4
2. INSPECTION OF REINFORCING STEEL WELDING IN ACCORDANCE WITH TABLE 1704.3, ITEM 5B.	—	—	AWS D1.4 ACI 318: 3.5.2	—
3. INSPECT BOLTS TO BE INSTALLED IN CONCRETE PRIOR TO AND DURING PLACEMENT OF CONCRETE WHERE ALLOWABLE LOADS HAVE BEEN INCREASED.	X	—	—	1911.5
4. VERIFYING USE OF REQUIRED DESIGN MIX.	—	X	ACI 318: CH. 4, 5.2-5.4	1904.2.2, 1913.2, 1913.3
5. AT THE TIME FRESH CONCRETE IS SAMPLED TO FABRICATE SPECIMENS FOR STRENGTH TESTS, PERFORM SLUMP AND AIR CONTENT TESTS, AND DETERMINE THE TEMPERATURE OF THE CONCRETE.	X	—	ASTM C 172 ASTM C 31 ACI 318: 5.6, 5.8	1913.10
6. INSPECTION OF CONCRETE AND SHOTCRETE PLACEMENT FOR PROPER APPLICATION TECHNIQUES.	X	—	ACI 318: 5.9, 5.10	1913.6, 1913.7, 1913.8
7. INSPECTION FOR MAINTENANCE OF SPECIFIED CURING TEMPERATURE AND TECHNIQUES.	—	X	ACI 318: 5.11-5.13	1913.9
8. INSPECTION OF PRESTRESSED CONCRETE:				
A. APPLICATION OF PRESTRESSING FORCES.	X	—	ACI 318: 18.20 ACI 318: 18.18.4	—
B. GROUTING OF BONDED PRESTRESSING TENDONS IN THE SEISMIC- FORCE-RESISTING SYSTEM.	X			
9. ERECTION OF PRECAST CONCRETE MEMBERS.	—	X	ACI 318: CH. 16	—
10. VERIFICATION OF IN-SITU CONCRETE STRENGTH, PRIOR TO STRESSING OF TENDONS IN post tensioned CONCRETE AND PRIOR TO REMOVAL OF SHORES AND FORMS FROM BEAMS AND STRUCTURAL SLABS.	—	X	ACI 318: 6.2	—
11. INSPECT FRAMEWORK FOR SHAPE, LOCATION AND DIMENSIONS OF THE CONCRETE MEMBER BEING FORMED	—	X	ACI 318: 6.1.1	—

FOR SI: 1 INCH= 25.4 MM.
a. WHERE APPLICABLE, SEE ALSO SECTION 1707.1, SPECIAL INSPECTION FOR SEISMIC RESISTANCE

TABLE 1704.7: REQUIRED VERIFICATION AND INSPECTION OF SOILS

A

VERIFICATION AND INSPECTION TASK	CONTINUOUS DURING TASK LISTED	PERIODICALLY DURING TASK LISTED
1. VERIFY MATERIALS BELOW FOOTINGS ARE ADEQUATE TO ACHIEVE THE DESIGN BEARING CAPACITY.	—	X
2. VERIFY EXCAVATIONS ARE EXTENDED TO PROPER DEPTH AND HAVE REACHED PROPER MATERIAL.	—	X
3. PERFORM CLASSIFICATION AND TESTING OF CONTROLLED FILL MATERIALS	—	X
4. VERIFY USE OF PROPER MATERIALS, DENSITIES AND LIFT THICKNESSES DURING PLACEMENT AND COMPACTION OF CONTROLLED FILL.	X	—
5. PRIOR TO PLACEMENT OF CONTROLLED FILL, OBSERVE SUBGRADE AND VERIFY THAT SITE HAS BEEN PREPARED PROPERLY.	—	X

STRUCTURAL TESTS, INSPECTIONS, AND OBSERVATIONS

1. PER SECTION 1704 OF CBC 2007, THE FOLLOWING ITEMS SHALL BE INSPECTED AND TESTED BY A DEPUTY INSPECTOR.
2. ALL TESTS AND INSPECTIONS SHALL BE PERFORMED BY A SPECIAL INSPECTOR PER CBC SECTION 1704. THE SPECIAL INSPECTOR SHALL BE EMPLOYED BY THE OWNER, BUT NOT BY THE CONTRACTOR OR ANY OTHER PERSON RESPONSIBLE FOR THE WORK.
3. (1705.3) SPECIAL SEISMIC RESISTANCE REQUIREMENTS:

A. THE SEISMIC-FORCE RESISTING SYSTEMS IN STRUCTURES ASSIGNED TO SEISMIC DESIGN CATEGORY D, E, OR F IN ACCORDANCE WITH SECTION 1613.
B. DESIGNATED SEISMIC SYSTEMS IN STRUCTURES ASSIGNED TO SEISMIC DESIGN CATEGORY D, E, OR F.
C. THE FOLLOWING ADDITIONAL SYSTEMS AND COMPONENTS IN STRUCTURES ASSIGNED TO SEISMIC DESIGN CATEGORY C:

C.1. HEATING, VENTILATION, AND AIR-CONDITIONING (HVAC) DUCTWORK CONTAINING HAZARDOUS MATERIALS AND ANCHORAGE OF SUCH DUCTWORK.
C.2. PIPING SYSTEMS AND MECHANICAL UNITS CONTAINING FLAMMABLE, COMBUSTIBLE OR HIGHLY TOXIC MATERIALS.
C.3. ANCHORAGE OF ELECTRICAL EQUIPMENT USED FOR EMERGENCY OR STANDBY POWER SYSTEMS.

D. THE FOLLOWING ADDITIONAL SYSTEMS AND COMPONENTS IN STRUCTURES ASSIGNED TO SEISMIC DESIGN CATEGORY D:

D.1. SYSTEMS REQUIRED FOR SEISMIC DESIGN CATEGORY C
D.2. EXTERIOR WALL PANELS AND THEIR ANCHORAGE.
D.3. SUSPENDED CEILING SYSTEMS AND THEIR ANCHORAGE.
D.4. ACCESS FLOORS AND THEIR ANCHORAGE.
D.5 STEEL STORAGE RACKS AND THEIR ANCHORAGE, WHERE THE IMPORTANCE FACTOR IS EQUAL TO 1.5 IN ACCORDANCE W/ SECTION 15.5.3 OF ASCE 7.

4. (1705.4.2) SPECIAL WIND INSPECTION REQUIREMENTS:

A. ROOF CLADDING AND ROOF FRAMING CONNECTIONS

B. WALL CONNECTIONS TO ROOF AND FLOOR DIAPHRAGMS AND FRAMING.

C. ROOF AND FLOOR DIAPHRAGM SYSTEMS, INCLUDING COLLECTORS, DRAG STRUTS AND BOUNDARY ELEMENTS.

D. VERTICAL WINDFORCE-RESISTING SYSTEMS, INCLUDING BRACED FRAMES, MOMENT FRAMES AND SHEAR WALLS.

E. WINDFORCE-RESISTING SYSTEM CONNECTIONS TO THE FOUNDATION.

F. FABRICATION AND INSTALLATION OF SYSTEMS OR COMPONENTS REQUIRED TO MEET THE IMPACT-RESISTANCE REQUIREMENTS OF SECTION 1609.1.2.

A

PROJECT STATUS

BID SET 05/26/09

ISSUE			
A	5/26/09	REVISED NOTES	JN
MARK	DATE	DESCRIPTION	INITIAL

DRAWN	J NAGANO	DATE
DESIGNED	J LIVERMORE	DATE
CHECKED	N SHAH	DATE
PROJMGR	J GRANT	DATE
REQUESTOR	R SCHULER	DATE
R&QA		DATE
SAFETY		DATE
SUPERVISOR	S FRANKEL	DATE

Ames Research Center
Moffet Field, California

N232 COLLABORATIVE SUPPORT FACILITY

TESTS, INSPECTIONS AND OBSERVATIONS

SIZE	CAGE CODE		REV
D	25307	A232-0800- S003	A
SCALE		INDEX	SHEET OF

5/22/2009 8:11:33 AM

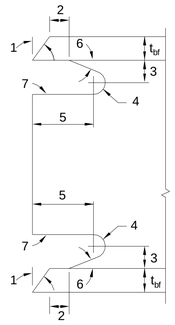

Notes:

1. Bevel as required by a selected AWS prequalified CJP groove welded joint detail.
2. Larger of t_{bf} or 1/2" (plus 1/2 t_{bf}, or minus 1/4 t_{bf}).
3. 3/4 t_{bf} to t_{bf}, 3/4" minimum (± 1/4").
4. 3/8" minimum radius (plus not limited, or minus 0).
5. 3 t_{bf} (±1/2").
6. Tolerances shall not accumulate to the extent that the angle of the access hole cut to the flange surface exceed 25°.
7. Weld access hole shall be ground smooth to a surface roughness value not to exceed 500 micro inch; and shall be free of notches and gouges.

Weld Access Hole Detail — ***Detail 12*** Scale: Not to Scale

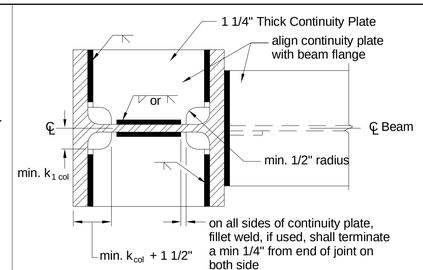

Continuity Plate Detail — ***Detail 8*** Scale: Not to Scale

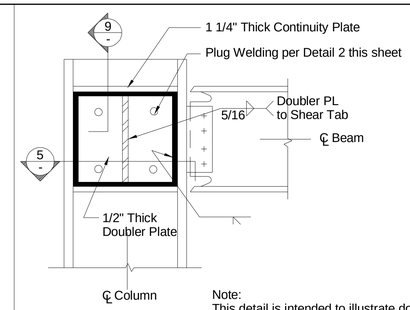

Note:
This detail is intended to illustrate doubler plate connection to column. Top and bottom of doubler plate terminates at the continuity plates.

Web Doubler Plate Detail @ Roof — ***Detail 4*** Scale: Not to Scale

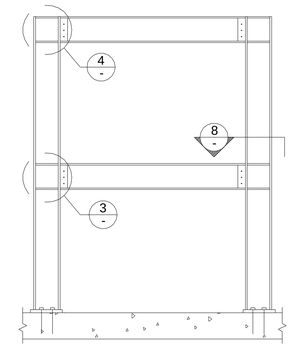

Sample Steel Moment Frame — ***Detail 1*** Scale: Not to Scale

Contractor shall follow all the requirements of the AWS not shown here.

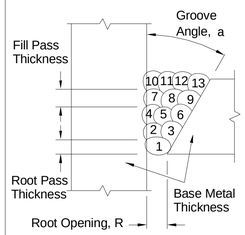

Notes:

1. For maximum fill pass thickness, see Table 5 on Sheet S004
2. For moment connection at bottom beam flange to column flange, the maximum root pass thickness shall not exceed 1/4" per Part V, Item 1 on Sheet S004. For welded connection at all other locations, see Table 5 on Sheet S004 for maximum root pass thickness.
3. Root Opening, R, and Groove Angle, a, shall be per selected AWS prequalified CJP groove welded joint detail.
4. Welding pass numbers are shown diagrammatically to indicate sequence. Quantity of passes may vary due to depth and/or position of weld. This figure is intended to illustrate recommended welding sequence for FCAW and SMAW welding process only.

Weld Pass Sequence — ***Detail 13*** Scale: Not to Scale

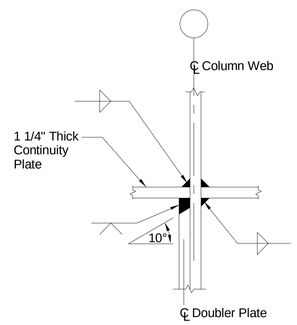

Doubler Plate Welds to Continuity Plate — ***Detail 9*** Scale: Not to Scale

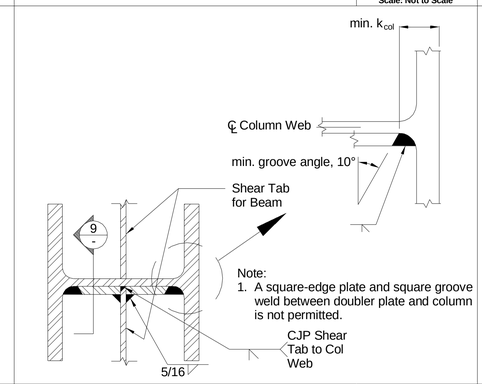

Groove Welded Doubler Plate — ***Detail 5*** Scale: Not to Scale

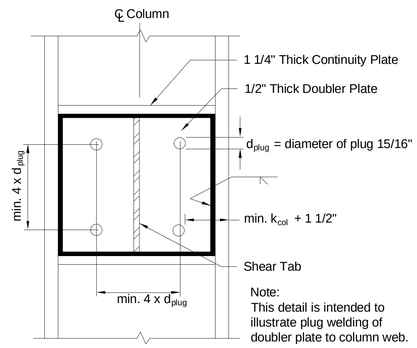

Note:
This detail is intended to illustrate plug welding of doubler plate to column web.

Plug Welding of Doubler Plate to Column — ***Detail 2*** Scale: Not to Scale

TOLERANCES	
R = +1/16, -0	+1/4, -1/16
a = +10°, -0°	+10°, -5°

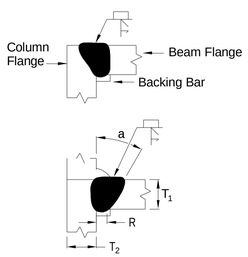

Welding Process	Joint Designation	Base Metal Thickness (U = unlimited) T_1	T_2	Groove Preparation: Root Opening	Groove Angle	Allowed Welding Positions	Gas Shielding for FCAW
SMAW	TC-U4a	U	U	R = 1/4	a = 45°	All	-
				R = 3/8	a = 30°	F, V, OH	-
FCAW	TC-U4a-GF	U	U	R = 3/16	a = 30°	All	Required
				R = 3/8	a = 30°	F	Not required
				R = 1/4	a = 45°	All	Not required

Notes:

1. Groove welds in corner and T-joints of cyclically loaded structures shall be reinforced with fillet welds equal to T_1 /4, but need not exceed 3/8 inch.
2. For corner joints, the outside groove preparation may be in either or both members, provided the basic groove configuration is not changed and adequate edge distance is maintained to support the welding operations without excessive edge melting.
3. Adapted with permission from the AWS D1.1 Committee on Structural Welding, Structural Welding Code - Steel, AWS D1.1/D1.1M: 2002, Miami: American Welding Society, Figure 3.4 pg. 92 (top left).
4. Contractor shall follow all the requirements of the AWS not shown here.

AWS Prequalified CJP Groove Welded Joint Detail — ***Detail 14*** Scale: Not to Scale

BEAM SIZE	a	b	c	RADIUS
W24X76	6.75"	20.3""	1.8"	29.6"
W27X94	7.5"	22.9"	2.5"	27.4"

NOTE:

SEE DETAIL 7 FOR LOCATIONS OF "a", "b", "c" & RADIUS DIMENSIONS

RBS Dimension Schedule — ***Detail 10*** Scale: Not to Scale

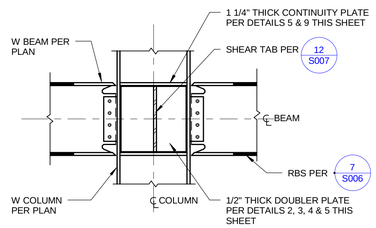

NOTES:
1. DOUBLER PLATE SHALL EXTEND BETWEEN THE TOP AND BOTTOM CONTINUITY PLATES.
2. DOUBLER PLATE SHALL BE Fy = 50 KSI STEEL.
3. CONTINUITY PL SHALL BE Fy = 50 KSI STEEL

Flange Weld Detail — ***Detail 6*** Scale: Not to Scale

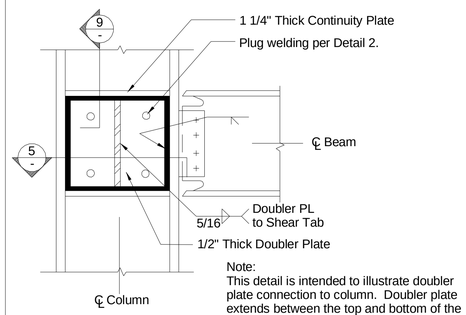

Note:
This detail is intended to illustrate doubler plate connection to column. Doubler plate extends between the top and bottom of the continuity plates.

Web Doubler Plate Detail @ Floor — ***Detail 3*** Scale: Not to Scale

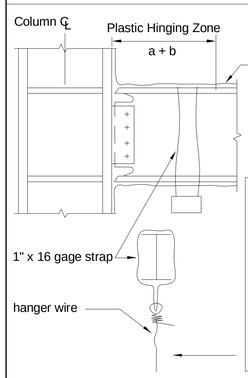

TEMPORARY

WARNING SIGN

"It is PROHIBITED to attach and to cause penetration or damage to the plastic hinging zones of steel moment-frames. These PROHIBITED conditions include bolts, holes, screws, shot pins, welds and tack welds (permanent or temporary). Failure to comply with these requirements may cause the replacement of steel."

DO NOT MOVE OR REMOVE THIS SIGN

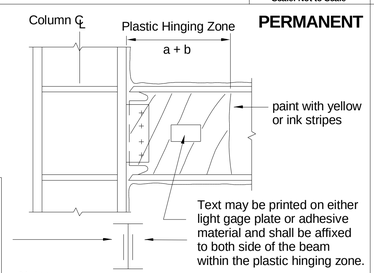

PERMANENT

Notes:

1. This detail is intended to illustrate the location of the "Warning Sign" at the plastic hinging zone.
2. "Warning Sign" shall be provided as required by Part IV Item 6 on Sheet S002.
3. Length of the plastic hinging zone shall be equal to a + b. See Detail 10.

Warning Sign at Plastic Hinging Zone — ***Detail 15*** Scale: Not to Scale

NOTES:

1. WELD SHALL BE PEFORMED PER SPECS AND DRAWINGS. THE SEISMIC DEMAND CRITICAL JOINT SHALL BE PER AWS D1.8:2005 ARE AS FOLLOWS:
   - (a) BEAM FLANGE TO COLUMN FLANGE WELDS
   - (b) SHEAR TAB WELDS
   - (c) CONTINUITY PLATE
   - (d) DOUBLER PLATE

CONTINUITY PLATES:

1. CJP TYPICAL FOR EXTERIOR BEAM-COLUMN CONNECTIONS (BEAM ONE SIDE ONLY).WELD OF CONTINUITY PLATE TO COLUMN FLANGE AT FREE SIDE MAY BE FILLET WELDS AT TOP AND BOTTOM FACE OF PLATE.
2. EXTEND WELD TABS TO 1/4" MAXIMUM FROM EDGE OF CONTINUITY PLATE. GRIND END OF WELD SMOOTH (500U-IN), NOT FLUSH. DO NOT GOUGE COLUMN FLANGE

DOUBLER PLATES:

1. DOUBLE PLATE SHALL EXTEND BETWEEN THE TOP AND BOTTOM CONTINUITY PLATES.
2. PROVIDE THIS DOUBLER PLATE WHERE THIS SHEET IS REFERENCED TO ON THE PLANS

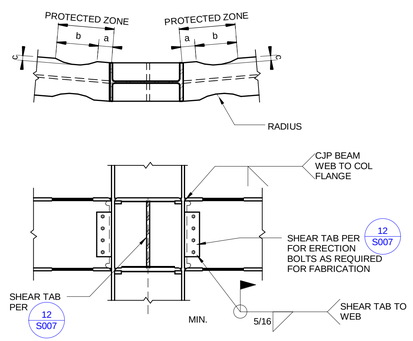

SMF/ RBS Detail — ***Detail 7*** Scale: Not to Scale

PROJECT STATUS

BID SET 05/26/09

ISSUE			
A	5/26/09	REVISED DETAILS	JN
MARK	DATE	DESCRIPTION	INITIAL

		DATE
DRAWN	J.NAGANO	
DESIGNED	J. LIVERMORE	
CHECKED	N. SHAH	
PROJMGR	J GRANT	
REQUESTOR	R SCHULER	
R&QA		
SAFETY		
SUPERVISOR	S FRANKEL	

Ames Research Center
Moffet Field, California

N232 COLLABORATIVE SUPPORT FACILITY

TYPICAL DETAILS SPECIAL MOMENT FRAMES

SIZE	CAGE CODE		REV
D	25307	A232-0800- S006	A
SCALE		INDEX	SHEET OF

5/22/2009 9:31:26 AM

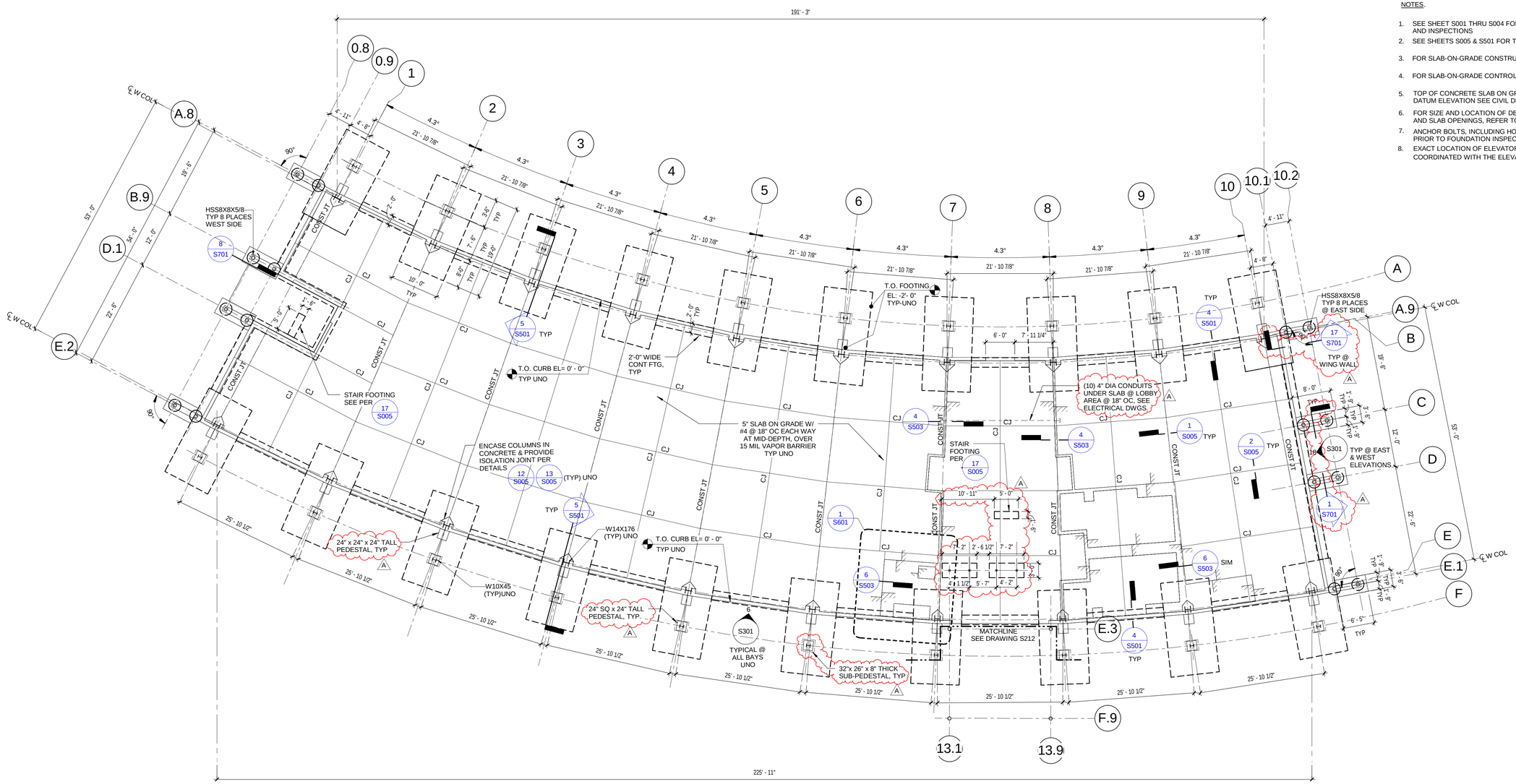

NOTES.

1. SEE SHEET S001 THRU S004 FOR GENERAL NOTES, SYMBOLS, ABBREVIATIONS AND INSPECTIONS
2. SEE SHEETS S005 & S501 FOR TYPICAL FOUNDATION & SLAB DETAILS.
3. FOR SLAB-ON-GRADE CONSTRUCTION JOINTS SEE DETAIL 1/S005
4. FOR SLAB-ON-GRADE CONTROL JOINTS SEE DETAIL 2/S005
5. TOP OF CONCRETE SLAB ON GRADE (T.O.C) IS -0'-10" FROM FINISH FLOOR DATUM ELEVATION SEE CIVIL DRAWINGS FOR BENCHMARK ELEVATION.
6. FOR SIZE AND LOCATION OF DEPRESSED SLABS, CURBS, ELEVATOR PITS, AND SLAB OPENINGS, REFER TO ARCHITECTURAL DRAWINGS.
7. ANCHOR BOLTS, INCLUDING HOLD-DOWN ANCHORS, SHALL BE TIED IN PLACE PRIOR TO FOUNDATION INSPECTION.
8. EXACT LOCATION OF ELEVATOR GUIDE RAIL SUPPORT POSTS SHALL BE COORDINATED WITH THE ELEVATOR MANUFACTURER.

PROJECT STATUS

BID SET 05/26/09

ISSUE			
A	5/26/09	RELOCATED STAIR COLUMNS, REVISED COL PEDESTAL SIZES & ADDED CONDUIT QUANTITY & SPACING	JN
MARK	DATE	DESCRIPTION	INITIAL

KEY PLAN

NORTH ARROW: BLDG NORTH, TRUE NORTH

SCALE: 3/32" = 1'-0"

0' 4' 12' 24' 42'-8"

		DATE
DRAWN	J. NAGANO	
DESIGNED	J. LIVERMORE	
CHECKED	N.SHAH	
PROJMGR	J GRANT	
REQUESTOR	R SCHULER	
R&QA		
SAFETY		
SUPERVISOR	S FRANKEL	

Ames Research Center
Moffet Field, California

N232 COLLABORATIVE SUPPORT FACILITY

PARTIAL FOUNDATION PLAN
NORTH WING

SIZE	CAGE CODE			REV
D	25307	A232-0800-	S211	A
SCALE		INDEX	SHEET OF	

5/22/2009 10:06:27 AM

NOTES.

1. SEE SHEET S001 THRU S004 FOR GENERAL NOTES, SYMBOLS, ABBREVIATIONS AND INSPECTIONS
2. SEE SHEETS S005 & S501 FOR TYPICAL FOUNDATION & SLAB DETAILS.
3. FOR SLAB-ON-GRADE CONSTRUCTION JOINTS SEE DETAIL 1/S005
4. FOR SLAB-ON-GRADE CONTROL JOINTS SEE DETAIL 2/S005
5. TOP OF CONCRETE SLAB-ON-GRADE (T.O.C) IS -0'-10" FROM FINISH FLOOR DATUM ELEVATION SEE CIVIL DRAWINGS FOR BENCHMARK ELEVATION.
6. FOR SIZE AND LOCATION OF DEPRESSED SLABS, CURBS, ELEVATOR PITS, AND SLAB OPENINGS, REFER TO ARCHITECTURAL DRAWINGS.
7. ANCHOR BOLTS, INCLUDING HOLD-DOWN ANCHORS, SHALL BE TIED IN PLACE PRIOR TO FOUNDATION INSPECTION.
8. EXACT LOCATION OF ELEVATOR GUIDE RAIL SUPPORT POSTS SHALL BE COORDINATED WITH THE ELEVATOR MANUFACTURER.

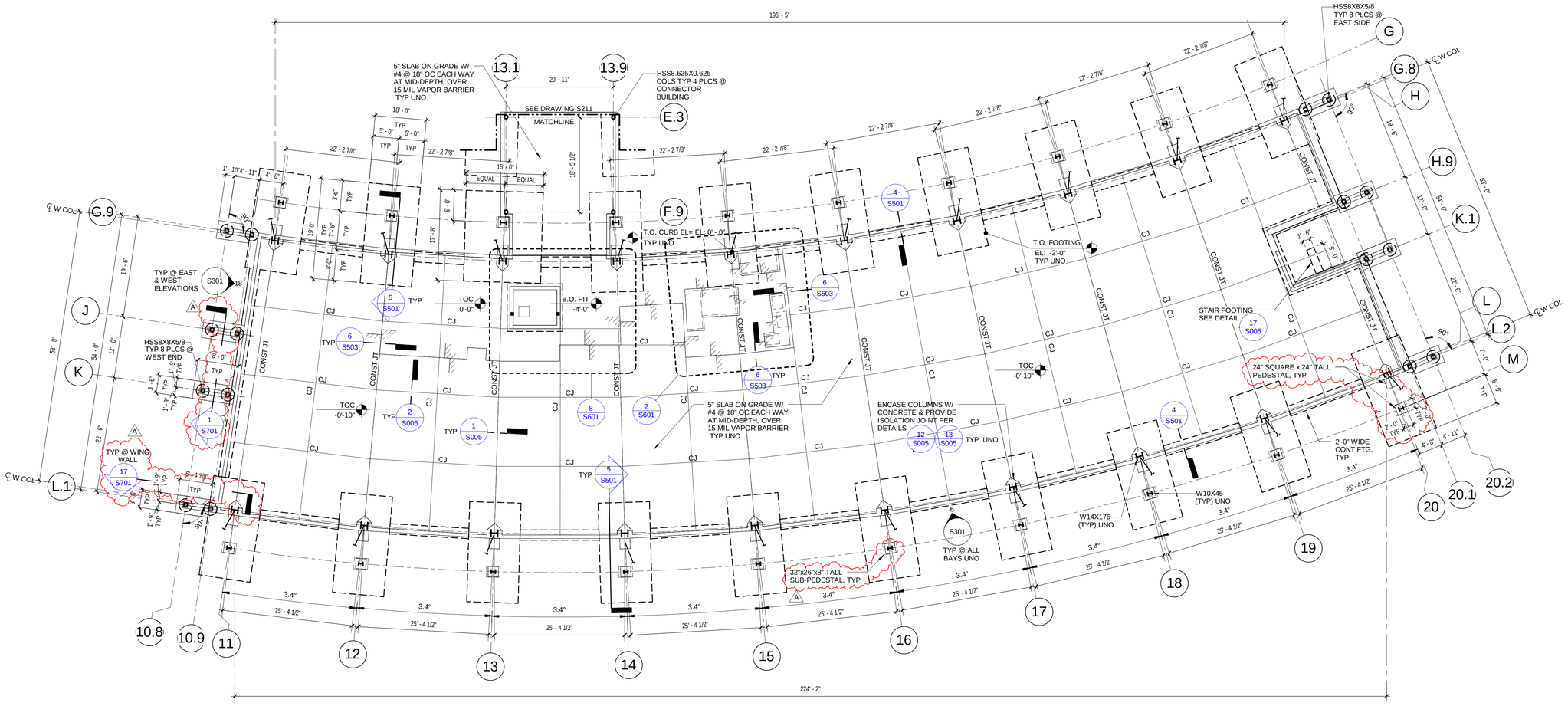

PROJECT STATUS			
BID SET 05/26/09			
ISSUE			
A	5/26/09	REVISED COLUMN PEDESTAL SIZES & ADDED WING WALL SECTIONS	JN
MARK	DATE	DESCRIPTION	INITIAL

KEY PLAN

NORTH ARROW: BLDG NORTH, TRUE NORTH

SCALE: 3/32" = 1'-0"

0' 4' 12' 24' 42'-8"

		DATE
DRAWN	J. NAGANO	
DESIGNED	J. LIVERMORE	
CHECKED	N. SHAH	
PROJMGR	J GRANT	
REQUESTOR	R SCHULER	
R&QA		
SAFETY		
SUPERVISOR	S FRANKEL	

Ames Research Center
Moffet Field, California

N232 COLLABORATIVE SUPPORT FACILITY

PARTIAL FOUNDATION PLAN SOUTH WING

SIZE	CAGE CODE		REV
D	25307	A232-0800- S212	A
SCALE	INDEX	SHEET OF	

5/22/2009 8:54:37 AM

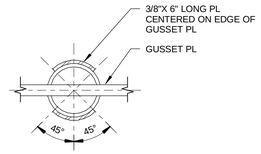

15 BRACE REINFORCING @ GUSSET PL
S501 REF: S501 SCALE: 1 1/2" = 1'-0"

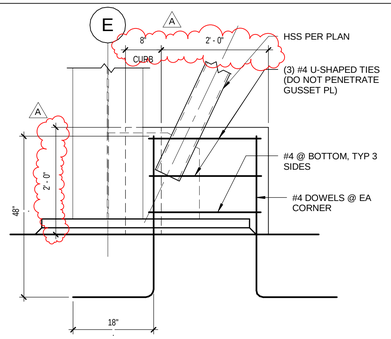

18 PILASTER REINF AROUND AB
S501 REF: S501 SCALE: 3/4" = 1'-0"

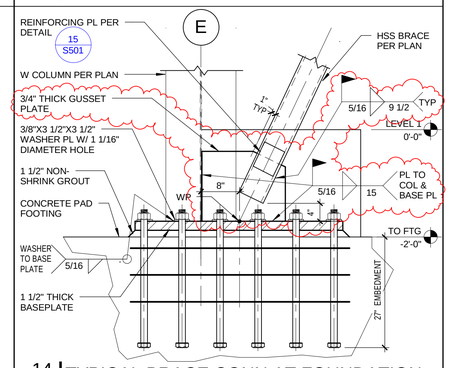

14 TYPICAL BRACE CONN AT FOUNDATION
S501 REF: S501 SCALE: 3/4" = 1'-0"

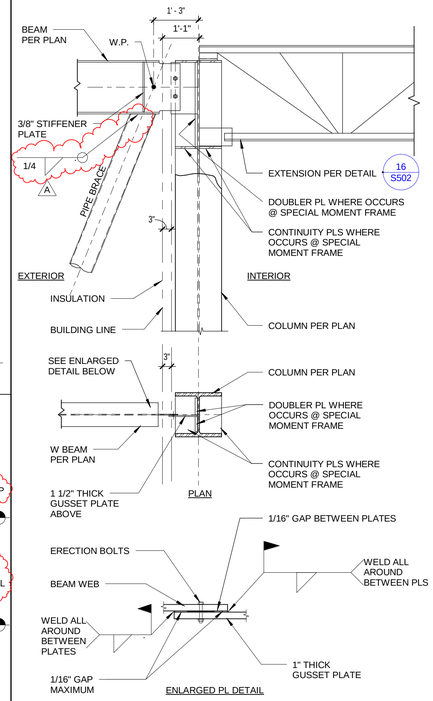

10 BRACE CONNECTION AT ROOF
S501 REF: S501 SCALE: 1/2" = 1'-0"

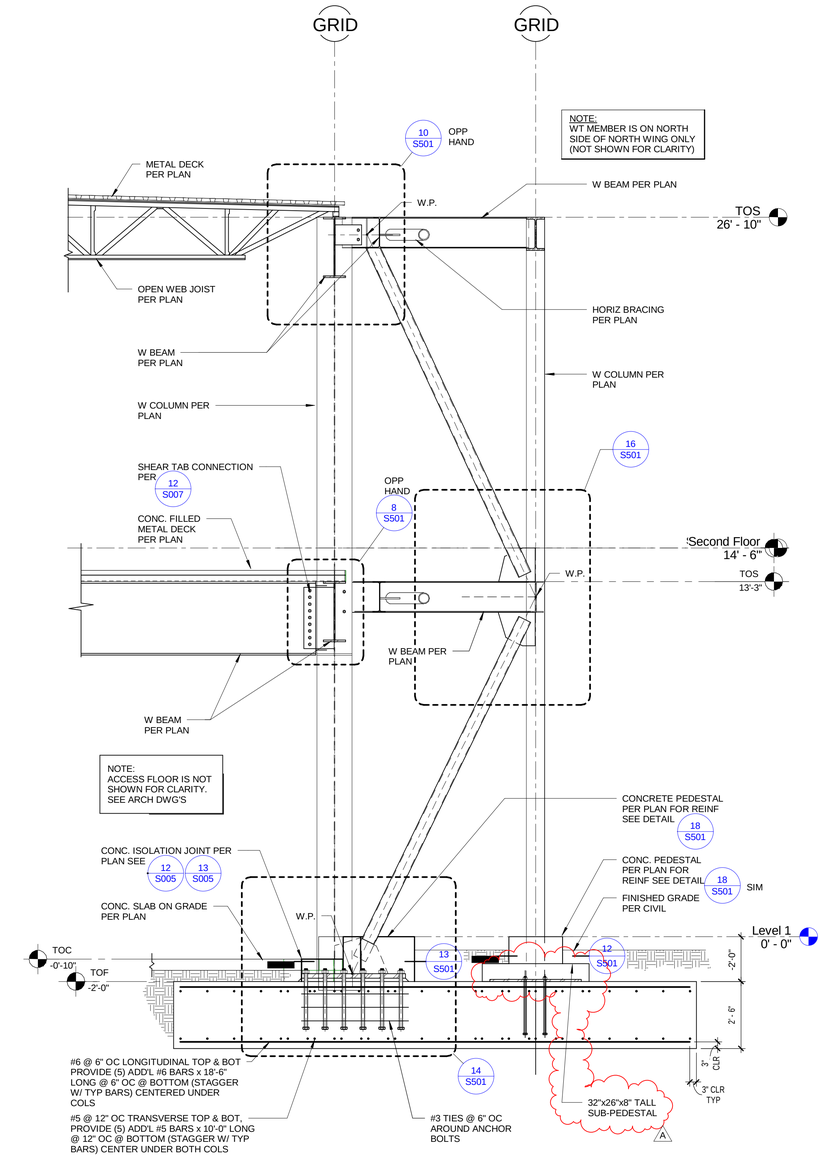

5 TYPICAL BRACED FRAME ELEVATION
S501 REF: S211 SCALE: 3/8" = 1'-0"

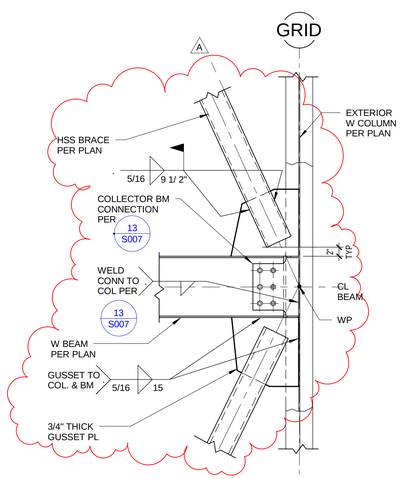

16 BRACE CONNECTION AT 2ND FLOOR
S501 REF: S501 SCALE: 3/4" = 1'-0"

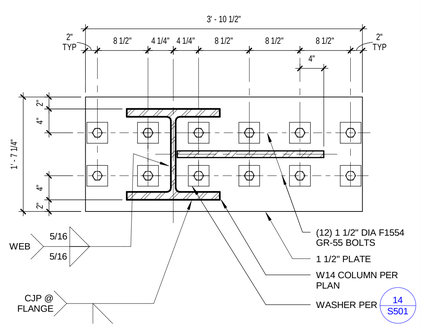

13 COLUMN BASEPLATE
S501 REF: S007 SCALE: 1" = 1'-0"

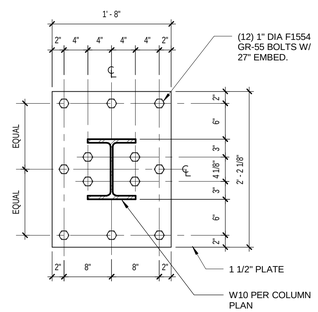

12 EXTERIOR COLUMN BASEPLATE
S501 REF: S007 SCALE: 1" = 1'-0"

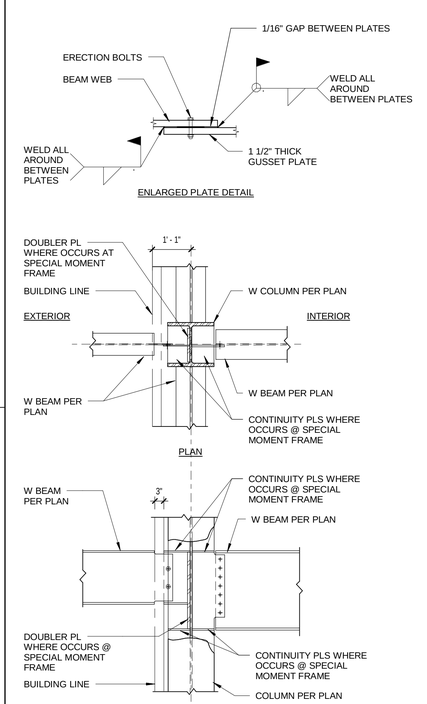

8 BEAM TO BEAM CONN. AT 2nd FLOOR
S501 REF: S501 SCALE: 1/2" = 1'-0"

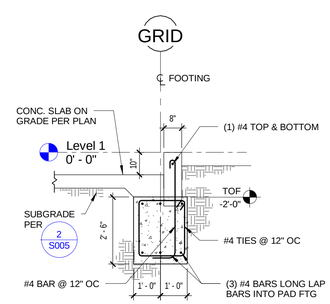

4 CURB FOUNDATION DETAIL
S501 REF: S211 SCALE: 3/8" = 1'-0"

PROJECT STATUS: BID SET 05/26/09

ISSUE			
A	5/26/09	REVISED BRACE CONNECTIONS AND PEDESTALS	JN
MARK	DATE	DESCRIPTION	INITIAL

DRAWN	J NAGANO	DATE
DESIGNED	J LIVERMORE	DATE
CHECKED	N SHAH	DATE
PROJMGR	J GRANT	DATE
REQUESTOR	R SCHULER	DATE
RSQA		DATE
SAFETY		DATE
SUPERVISOR	S FRANKEL	DATE

Ames Research Center
Moffet Field, California

N232 COLLABORATIVE SUPPORT FACILITY

SECTIONS AND DETAILS

SIZE	CAGE CODE		REV
D	25307	A232-0800- S501	A
SCALE		INDEX / SHEET OF	

5/22/2009 10:02:32 AM

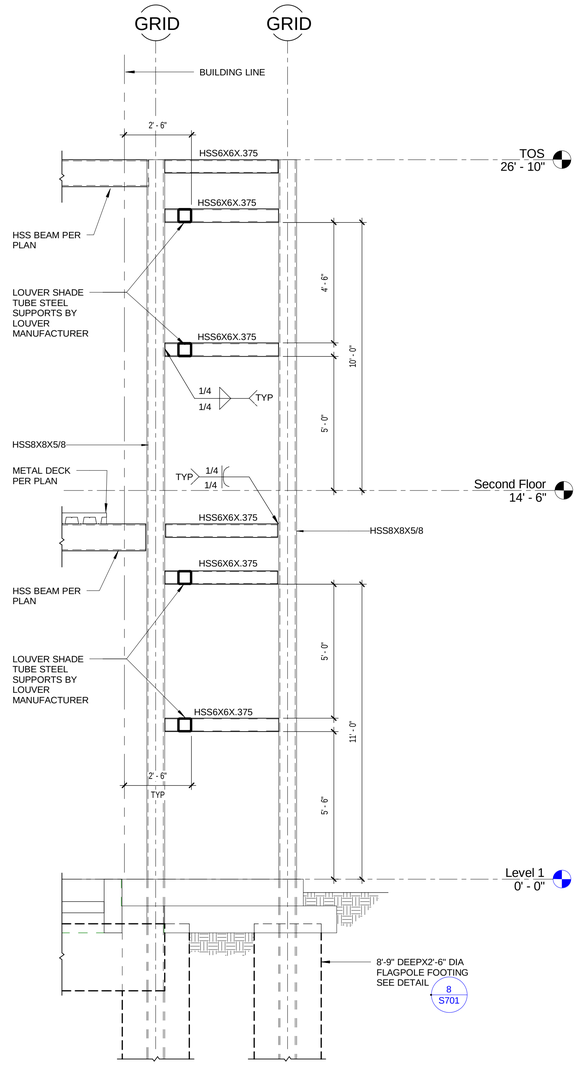

17 WING WALL FRAMING @ END

S701 REF: S211 SCALE: 3/8" = 1'-0"

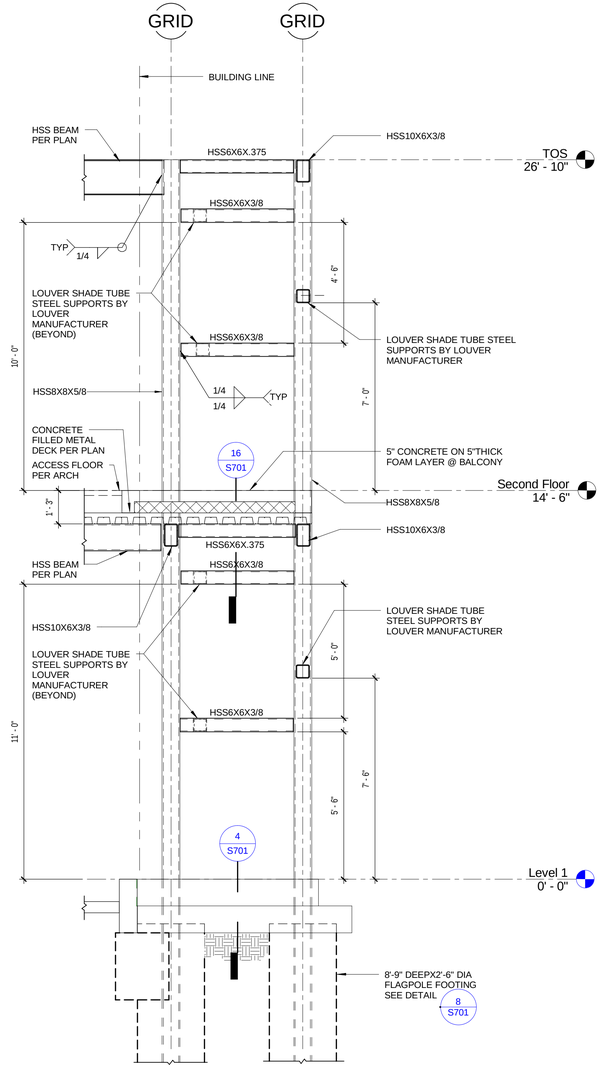

9 WING WALL FRAMING @ BALCONY

S701 REF: S701 SCALE: 3/8" = 1'-0"

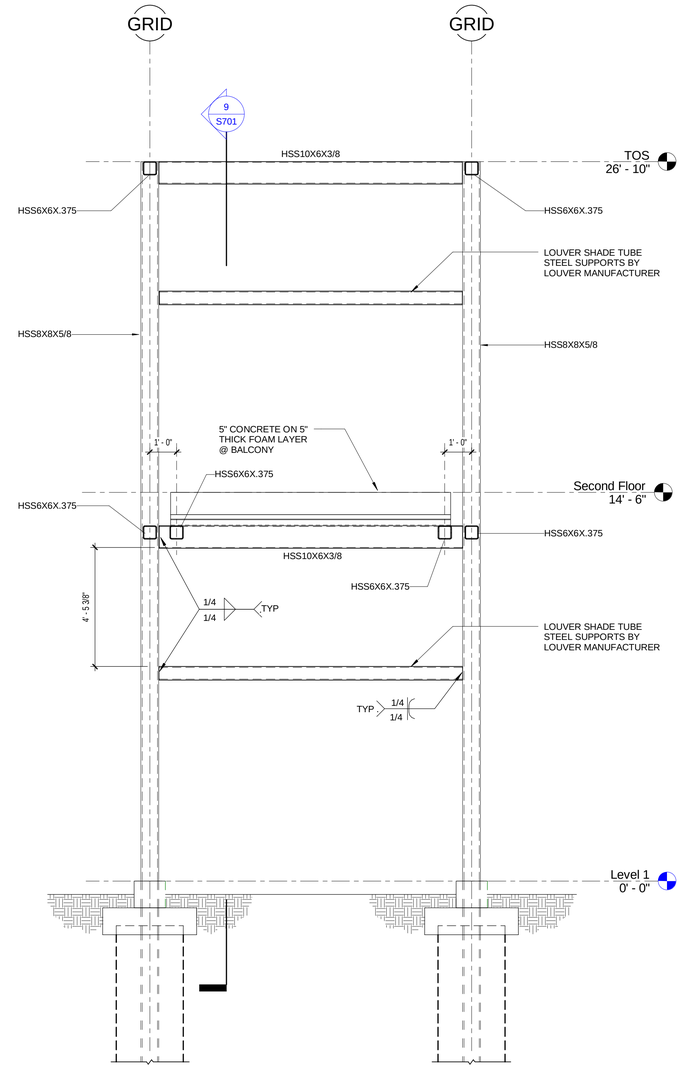

1 WING WALL SECTION @ BALCONY

S701 REF: S211 SCALE: 3/8" = 1'-0"

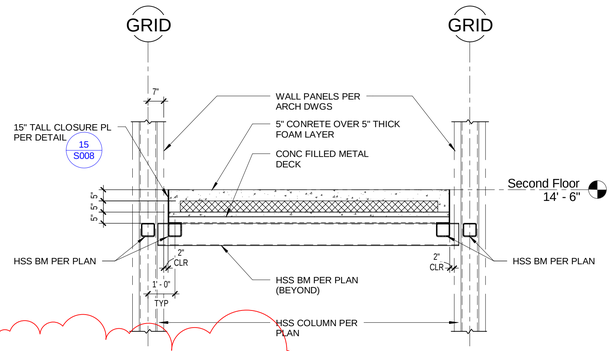

16 SECTION THROUGH BALCONY

S701 REF: S701 SCALE: 3/8" = 1'-0"

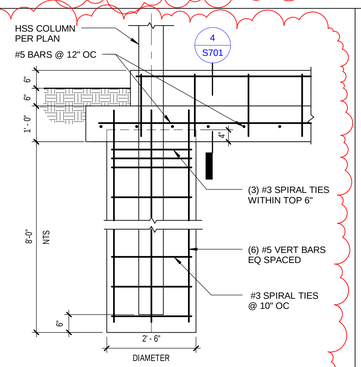

8 WING WALL COLUMN FOOTING

S701 REF: S211 SCALE: 1/2" = 1'-0"

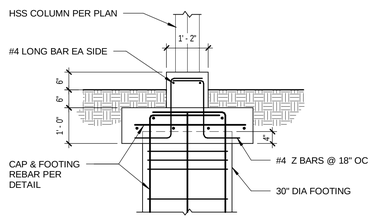

4 WING WALL FOOTING SECTION

S701 REF: S701 SCALE: 1/2" = 1'-0"

PROJECT STATUS

BID SET 05/26/09

ISSUE

MARK	DATE	DESCRIPTION	INITIAL
A	5/26/09	ADDED NEW WING WALL SECTIONS AND DETAILS	JN

		DATE
DRAWN	J NAGANO	
DESIGNED	J LIVERMORE	
CHECKED	N SHAH	
PROJMGR	J GRANT	
REQUESTOR	R SCHULER	
R&QA		
SAFETY		
SUPERVISOR	S FRANKEL	

Ames Research Center
Moffet Field, California

N232 COLLABORATIVE SUPPORT FACILITY

DETAILS

SIZE	CAGE CODE		REV
D	25307	A232-0800- S701	A

SCALE INDEX SHEET OF

5/29/2009 7:06:53 AM