NOTICE: WHEN GOVERNMENT DRAWINGS, SPECIFICATIONS, OR OTHER DATA ARE USED FOR ANY PURPOSE OTHER THAN IN CONNECTION WITH A DEFINITELY RELATED GOVERNMENT PROCUREMENT OPERATION, THE UNITED STATES GOVERNMENT LOSES NO RIGHTS THEREUNDER, AND THE FACT THAT SUCH DRAWINGS, SPECIFICATIONS, OR OTHER DATA MAY BE LINKED TO, OR HAVE BEEN FURNISHED IN ANY WAY SUPPLIED THE SAID DRAWINGS, SPECIFICATIONS, OR OTHER DATA IS NOT TO BE REGARDED BY IMPLICATION OR OTHERWISE AS IN ANY MANNER LICENSING THE HOLDER OF ANY OTHER PERSON OR CORPORATION, OR CONFERRING ANY RIGHTS OR PERMISSION TO MANUFACTURE, USE, OR SELL ANY PATENTED INVENTION THAT MAY IN ANY WAY BE RELATED THERETO.

PART NO.	RF	ZONE	SYM	REVISIONS DESCRIPTION	DATE	APPROVAL

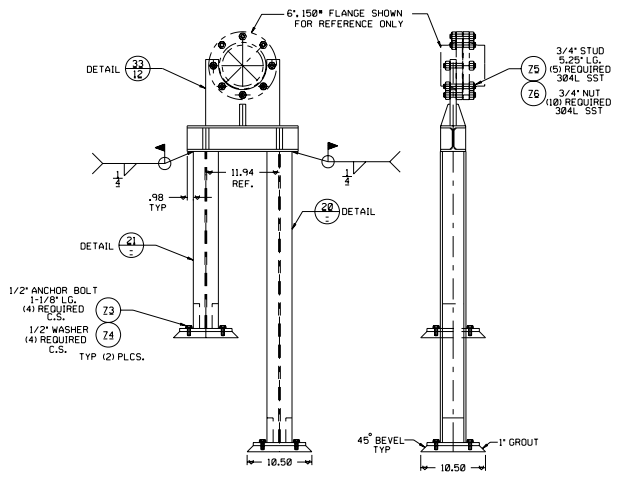

DETAIL 17/3

SCALE: 1:8

MAT'L: C.S.& 304L SSI

(2) REQUIRED

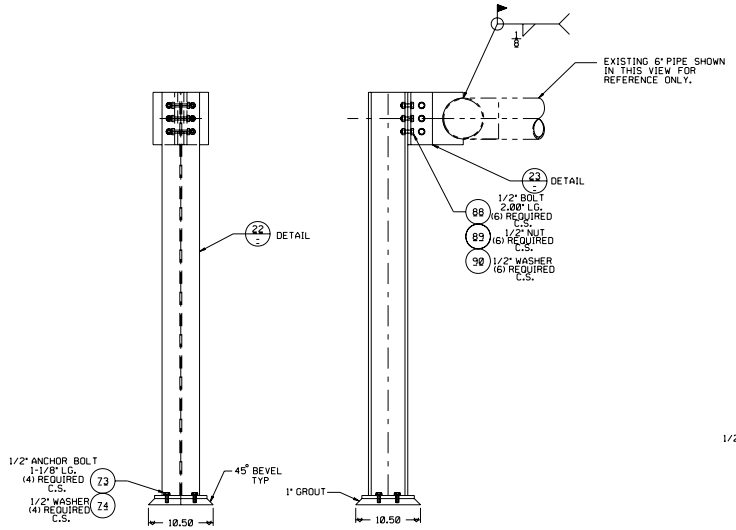

DETAIL 18/3

SCALE: 1:8

MAT'L: C.S.& 304L SSI

(1) REQUIRED

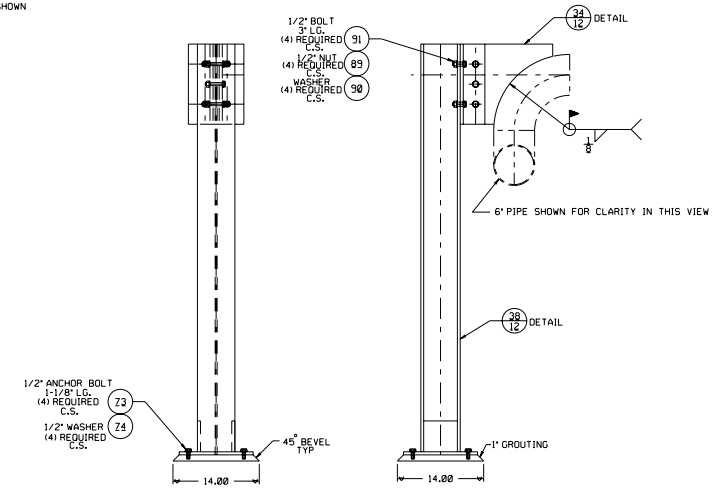

DETAIL 19/3

SCALE: 1:8

MAT'L: C.S.& 304L

(1) REQUIRED

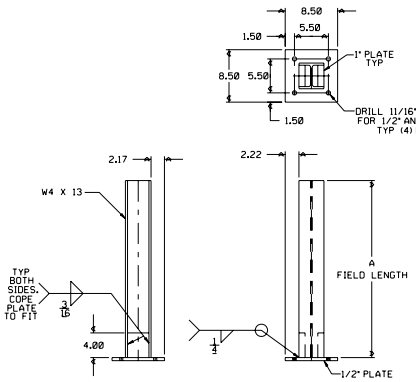

DETAIL 20/20/10 A=47.21 + 3.80 FIELD FIT = 51.00

(8) REQUIRED

DETAIL 21/21/13 A=28.71 + 3.29 FIELD FIT = 32.00

(4) REQUIRED

DETAIL 57/14 A=31.34 + 3.66 FIELD FIT = 35.00

(2) REQUIRED

DETAIL 59/14 A=33.00 + 3.50 FIELD FIT = 36.50

(2) REQUIRED

SCALE: NONE

MAT'L: C.S.

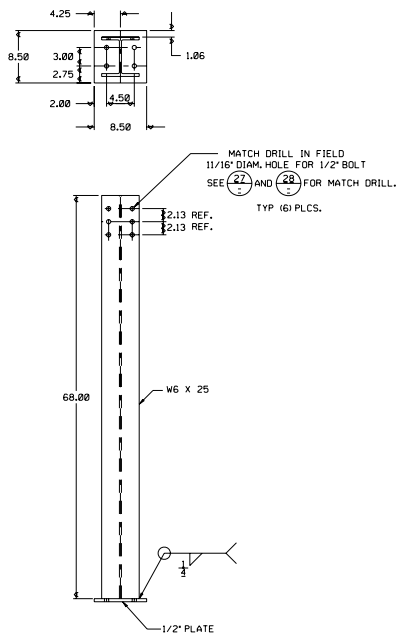

DETAIL 22

SCALE: 1:8

MAT'L: C.S.

(1) REQUIRED

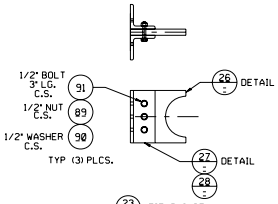

DETAIL 23 FIELD INSTALL

SCALE: 1:8

MAT'L: C.S.& 304L SSI

(1) REQUIRED

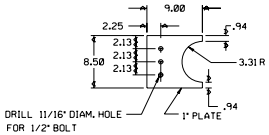

DETAIL 26

SCALE: 1:8

MAT'L: 304L SSI

(1) REQUIRED

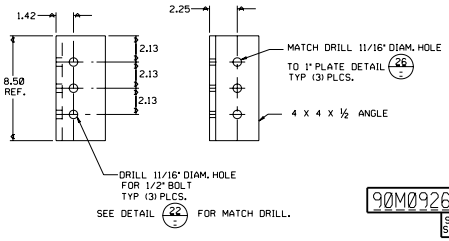

90M09265

SEE SHT1

DETAIL 27 SHOWN

DETAIL 28 OPPOSITE

SCALE: 1:4

MAT'L: C.S.

(1) REQUIRED EACH

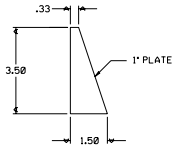

DETAIL 24/12 24/14

SCALE: 1:2

MAT'L: C.S.

(14) REQUIRED

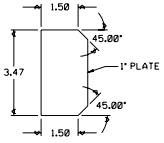

DETAIL 25/12 25/14

SCALE: 1:2

MAT'L: C.S.

(32) REQUIRED

SEE ENGINEERING RECORDS	NEXT ASSY / USED ON	APPLICATION	
UNLESS OTHERWISE SPECIFIED: DIMENSIONS ARE IN INCHES; TOLERANCES ON FRACTIONS ± 1/32, DECIMALS .XX ± .03, .XXX ± .010, ANGLES ± 1/2°	MATERIAL NOTED	HEAT TREATMENT NONE	FINAL PROTECTIVE FINISH NOTED
ORIGINAL DATE OF DRAWING 7-31-89	DRAFTSMAN RRK	CHECKER	ENGINEER RRK
CHECKER	STRESS	ENGINEER RRA	SUBMITTED
APPROVED	WEIGHT CHECKER	DATE 8-10-89	CODE EI35
SCALE NOTED	UNIT WEIGHT		

TECHNOLOGY TEST BED

LOX STORAGE FACILITY BUILDING 4670

GEORGE C. MARSHALL SPACE FLIGHT CENTER
NATIONAL AERONAUTICS AND SPACE ADMINISTRATION
HUNTSVILLE, ALABAMA

DESIGN CODE

DWG SIZE E 90M09265

SHEET 11 OF 14