REVISIONS			
REV	DESCRIPTION	APPROVAL	REL DATE

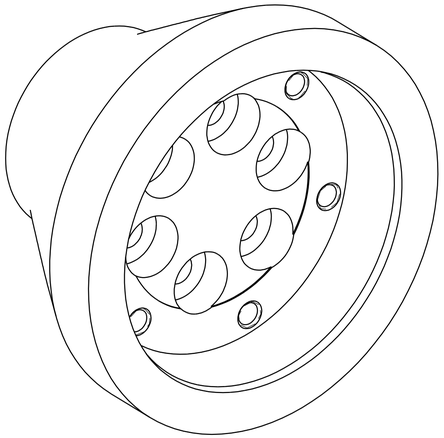

ISO VIEW
FOR REFERENCE ONLY

OUTSIDE WALL CONTOUR		
PTS	"X" BASIC	"Y" BASIC
1	0.0000	1.4475
2	0.0805	1.4497
3	0.1614	1.4565
4	0.2327	1.4663
5	0.2924	1.4773
6	0.3165	1.4825
7	0.3852	1.4997
8	0.4604	1.5227
9	0.5420	1.5528
10	0.6189	1.5865
11	0.9961	1.7997
12	1.2462	1.9451
13	1.5131	2.0999
14	1.7948	2.2624
15	2.2452	2.5192
16	2.8930	2.8750

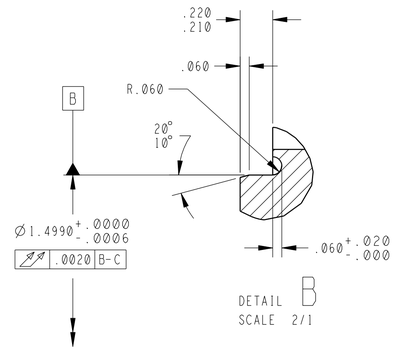

NOTES: (UNLESS OTHERWISE SPECIFIED)

1. GEOMETRIC DIMENSIONING AND TOLERANCING PER ASME Y14.5M-1994.
   - UNLESS SEPARATE TOLERANCES ARE SHOWN, PERFECT ORIENTATION AT MMC FOR RELATED FEATURES IS REQUIRED.
   - GENERAL ANGULAR TOLERANCE DOES NOT APPLY TO IMPLIED 90-DEGREE ANGLES.
2. MATERIAL: ALLOY STEEL 4130 (UNS G41300) PER SAE AMS 6370.
3. 63 ALL MACHINED SURFACES.
4. REMOVE ALL BURRS AND BREAK SHARP EDGES.
5. SPECIFIED SURFACE TO BE 32 C.
6. IDENTIFY WITH INFORMATION SHOWN BELOW PER SAE AS478-7A OCR-A12 IN APPROXIMATE LOCATION SHOWN, ORIENTATION OPTIONAL. CONTROL SERIAL NUMBERS BEGINNING WITH 001.

   MED03046-1-XXX (WHERE XXX IS SERIAL NUMBER)
   REV X (WHERE X IS DRAWING REVISION; USE "-" FOR INITIAL RELEASE)
   MFR-XXXXX (WHERE XXXXX IS MANUFACTURER'S CAGE CODE)
7. CLEAN AND DEGREASE PART PER GENERAL SHOP PRACTICE.
8. ORIGIN POINT LOCATED AT INTERSECTION OF DATUM "A" AND DATUM "B-C".

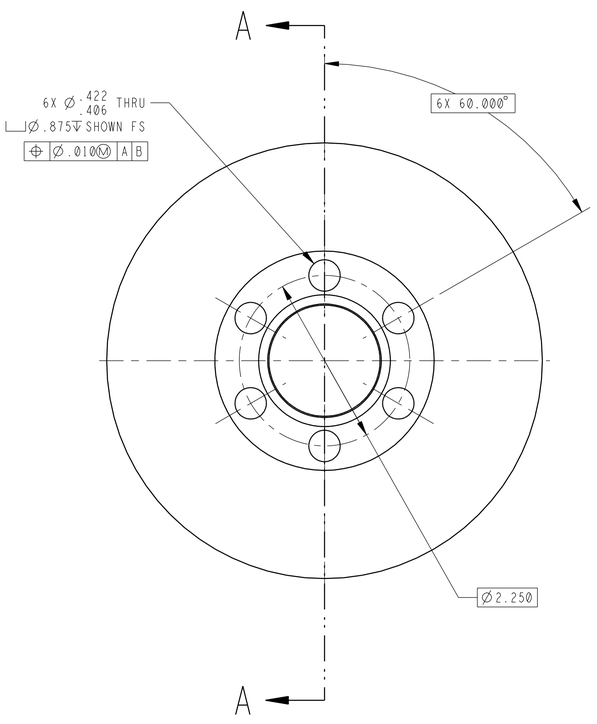

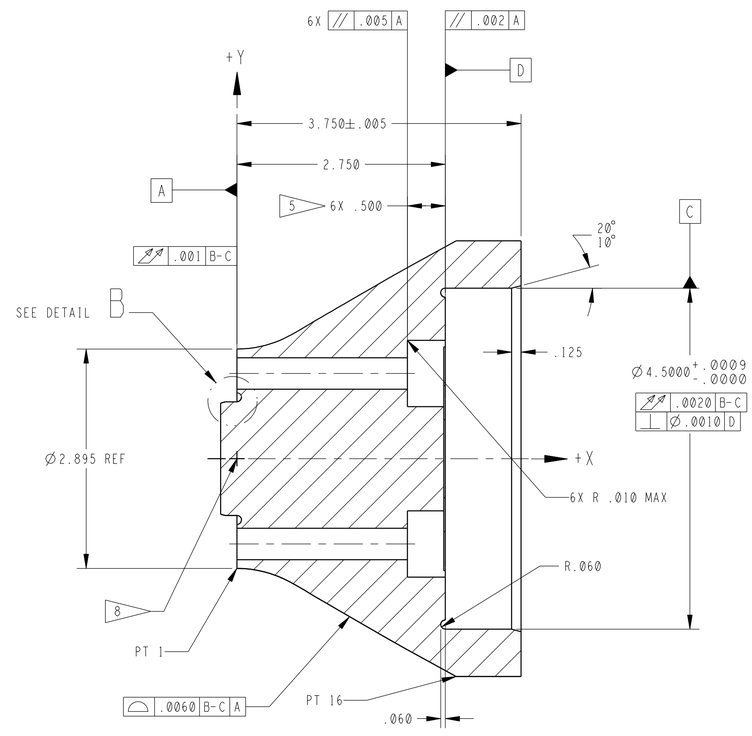

SECTION A - A

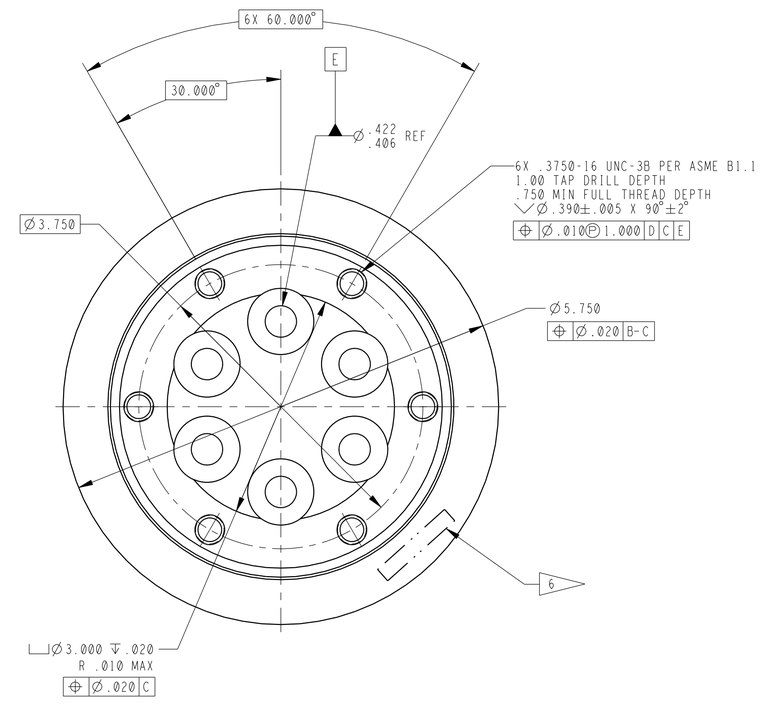

MED03046-1 SHOWN

		UNLESS OTHERWISE SPECIFIED DIMENSIONS ARE IN INCHES	REV REL DATE	
		TOLERANCES	ORIGINAL DRAWING APPROVALS	
		DECIMALS .XX±0.03 .XXX±0.010 / ANGLES ±0.5°	DESIGN ORG.	ER34
			DRAWN BY	D.RICE
			ENGINEER	D.RICE
MED03049	ALTAIR/PINTLE	MATERIAL 2	CHECKER	
NEXT ASSY	USED ON	HEAT TREATMENT	MATERIALS	
APPLICATION (VERIFY IN RELEASE RECORDS)		FINISH	STRESS	
			S & MA	
DRAWING STATE	In Work	MODEL STATE In Work	PRODUC-MANUF	
DRAWING VERSION	1.3	MODEL VERSION 1.25	PRODUC-FAB	
DRAWING NAME	MED03046	MODEL NAME MANDREL_NOZZLE_END	PRODUC-CONTR	R.LITCHFORD
DRAWING INFORMATION		MODEL INFORMATION	DESN BRANCH CHF	A.HISSAM
			RELEASE DATE	2008-07-25

GEORGE C. MARSHALL SPACE FLIGHT CENTER
NATIONAL AERONAUTICS AND SPACE ADMINISTRATION
HUNTSVILLE, ALABAMA

MANDREL,
NOZZLE END

SIZE	CODE	DRAWING NUMBER	REV
D	339B2	MED03046	1

SCALE 1/1 MASS (UNIT WEIGHT) 12.563 SHEET 1 OF 1

MSFC_DWG_D_FORMAT_REV(-) (MAY, 2008)