REVISIONS			
REV	DESCRIPTION	APPROVAL	REL DATE

NOTES: (UNLESS OTHERWISE SPECIFIED)

1. GEOMETRIC DIMENSIONING AND TOLERANCING PER ASME Y14.5M-1994.
   - UNLESS SEPARATE TOLERANCES ARE SHOWN, PERFECT ORIENTATION AT MMC FOR RELATED FEATURES IS REQUIRED.
   - GENERAL ANGULAR TOLERANCE DOES NOT APPLY TO IMPLIED 90-DEGREE ANGLES.
2. MATERIAL: ALLOY STEEL 4130 (UNS G41300) PER SAE AMS 6370.
3. 63 ALL MACHINED SURFACES.
4. REMOVE ALL BURRS AND BREAK SHARP EDGES.
5. IDENTIFY WITH INFORMATION SHOWN BELOW PER SAE AS478-7A OCR-A12 IN APPROXIMATE LOCATION SHOWN, ORIENTATION OPTIONAL. CONTROL SERIAL NUMBERS BEGINNING WITH 001.

   MED03047-1-XXX (WHERE XXX IS SERIAL NUMBER)
   REV X (WHERE X IS DRAWING REVISION; USE "-" FOR INITIAL RELEASE)
   MFR-XXXXX (WHERE XXXXX IS MANUFACTURER'S CAGE CODE)
6. CLEAN AND DEGREASE PART PER GENERAL SHOP PRACTICE.
7. ORIGIN POINT LOCATED AT INTERSECTION OF DATUM "A" AND DATUM "B-C".

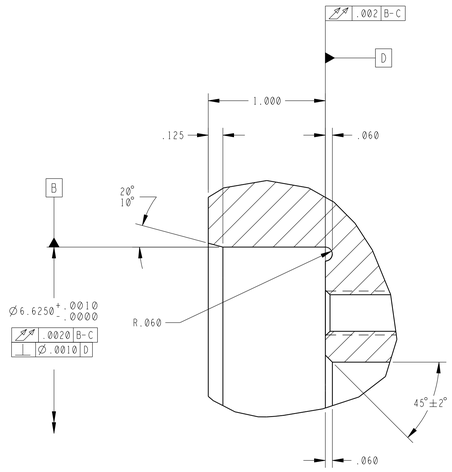

DETAIL B
SCALE 2/1

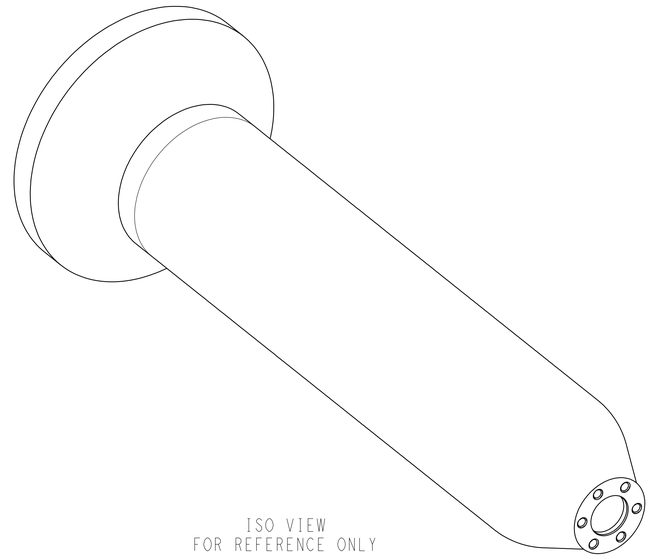

ISO VIEW
FOR REFERENCE ONLY

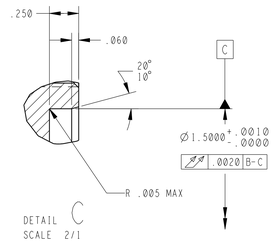

DETAIL C
SCALE 2/1

OUTSIDE WALL CONTOUR		
PTS	"X" BASIC	"Y" BASIC
1	0.0000	1.4475
2	-0.0789	1.4497
3	-0.1576	1.4561
4	-0.2358	1.4669
5	-0.3133	1.4818
6	-0.3899	1.5010
7	-0.4653	1.5243
8	-0.5393	1.5517
9	-0.6117	1.5831
10	-0.8733	1.7051
11	-1.1348	1.8270
12	-1.3963	1.9490
13	-1.6579	2.0710
14	-1.9194	2.1930
15	-2.1809	2.3150
16	-2.4424	2.4370
17	-2.7040	2.5590
18	-2.8488	2.6220
19	-2.9969	2.6760
20	-3.1477	2.7230
21	-3.3009	2.7610
22	-3.4559	2.7910
23	-3.6123	2.8130
24	-3.7696	2.8260
25	-4.0000	2.8300

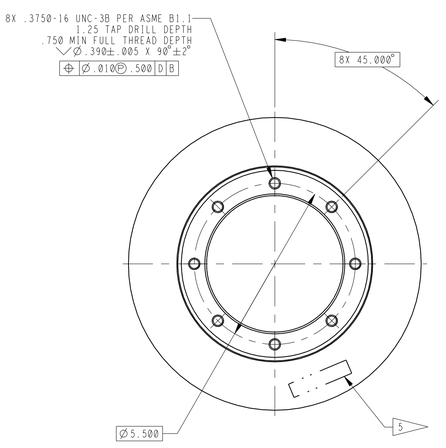

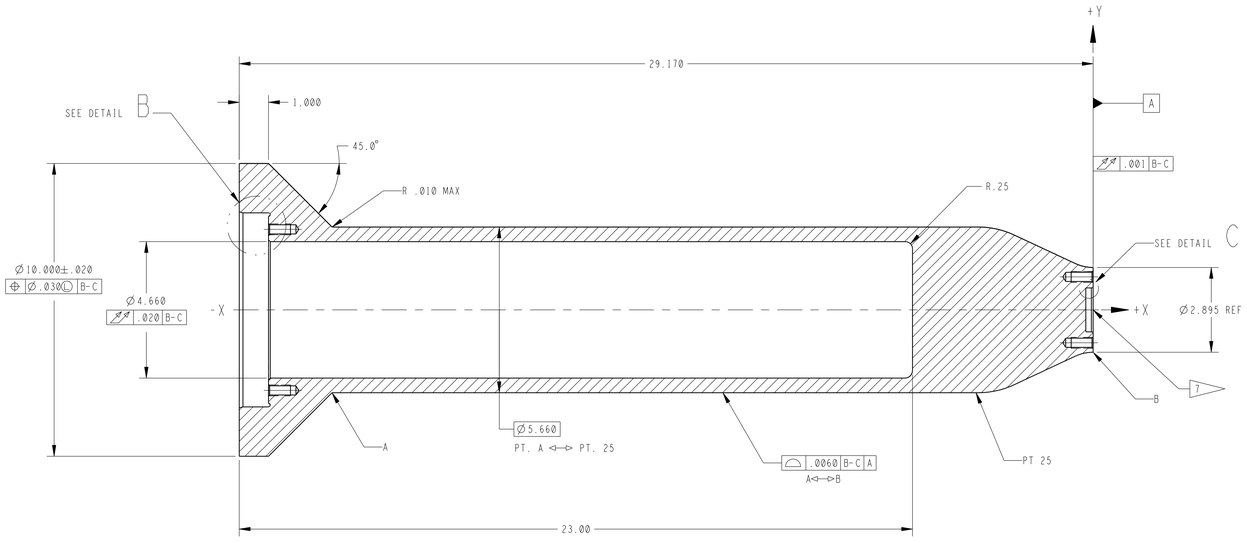

SECTION A-A

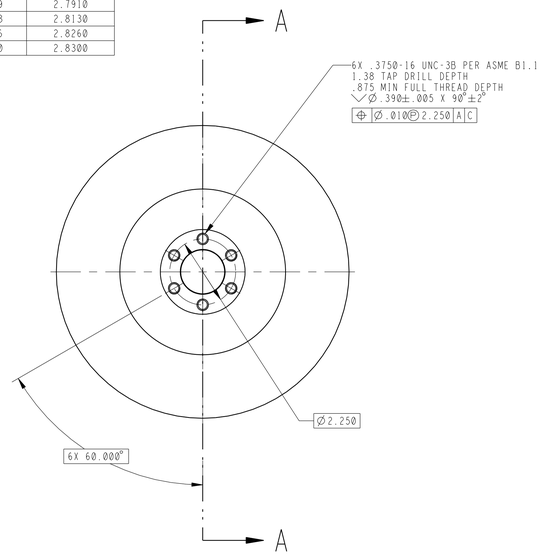

MED03047-1 SHOWN

		UNLESS OTHERWISE SPECIFIED DIMENSIONS ARE IN INCHES	REV REL DATE		GEORGE C. MARSHALL SPACE FLIGHT CENTER
		TOLERANCES	ORIGINAL DRAWING APPROVALS		NATIONAL AERONAUTICS AND SPACE ADMINISTRATION HUNTSVILLE, ALABAMA
		DECIMALS .XX±0.03 .XXX±0.010 / ANGLES ±0.5°	DESIGN ORG.	ER34	
			DRAWN BY	D.RICE	MANDREL, CHAMBER END
			ENGINEER	D.RICE	
MED03049	ALTAIR/PINTLE	MATERIAL 2	CHECKER		
NEXT ASSY	USED ON	HEAT TREATMENT	MATERIALS		
APPLICATION (VERIFY IN RELEASE RECORDS)		FINISH	STRESS		
			S & MA		
DRAWING STATE	In Work	MODEL STATE In Work	PRODUC-MANUF		
DRAWING VERSION	1.3	MODEL VERSION 1.25	PRODUC-FAB		
DRAWING NAME	MED03047	MODEL NAME MANDREL_CHAMBER_END	PRODUC-CONTR	R.LITCHFORD	SIZE E / CODE 339B2 / DRAWING NUMBER MED03047 / REV 1
DRAWING INFORMATION		MODEL INFORMATION	DESN BRANCH CHF	A.HISSAM	
			RELEASE DATE	2008-07-25	SCALE 1/2 / MASS (UNIT WEIGHT) 113.227 / SHEET 1 OF 1

MSFC.DWG.E.FORMAT.REV(-) (MAY, 2008)