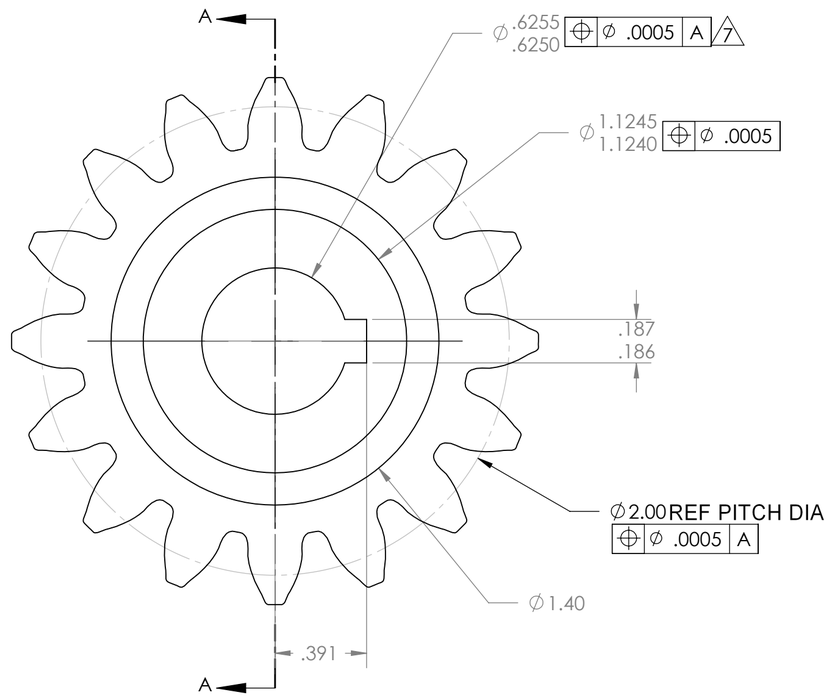

Top View
SCALE 2 : 1

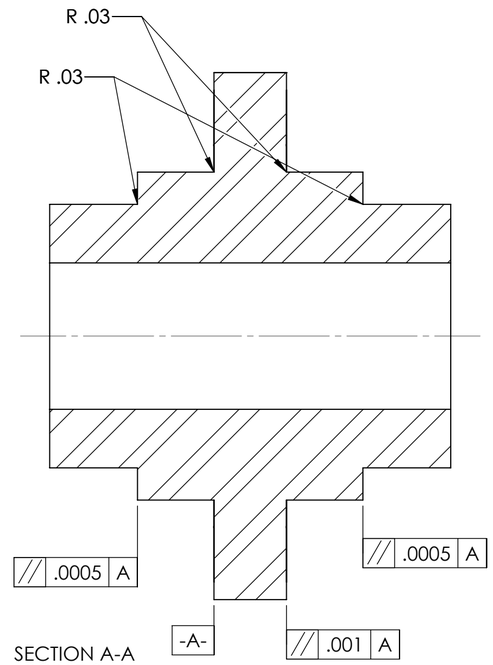

SECTION A-A
SCALE 2 : 1

1.	Material, fabrication, and inspection must conform to specifications supplied by NASA.. Spec no. 3-548642.
2.	Heat Treatment: A) Carburize and harden gear tooth profile flanks and roots per NASA specifications. B) Case hardness Rc 60-64. C) Effective case depth after grinding 0.020 - 0.030 (Rc 50). D) Core hardness Rc 34-42.
3.	Mask and don't carburize gear teeth end faces, top lands, or any other surfaces except as noted in 2.
4.	Shot Peen only the tooth roots. Shot peen per MIL-S-13165 using a shot size of S110 and an almen intensity of 0.010A min and a 200% exposure.
5.	After hardening and peening, grind only the tooth profile flanks. 0.005 max undercut to be 0.002 in max step permissible at blend of ground profile and fillet radius, below TIF.
6.	Surface finish on all tooth profile flanks to be 16 micro-inch RMS max. Otherwise, surface finish 64 micro-inch RMS all over including roots.
7.	Motor Shaft requires close slip fit to Magmotor Model # BA42-D-500HE developed by Satcon Co.

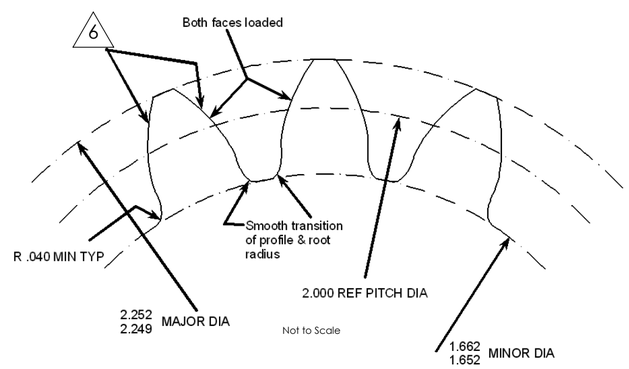

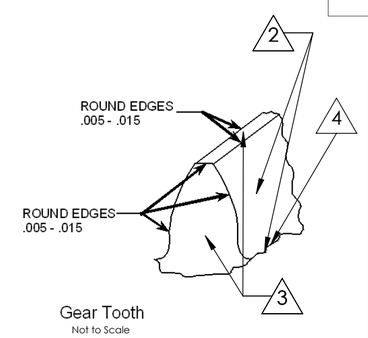

Gear Tooth
Not to Scale

Gear Data

No. of teeth	16
Diametral pitch	8
Circular pitch	0.3927
Whole depth	0.294
Addendum	0.125
Chordal tooth thickness	0.1920 - 0.1940
Helix angle	0 deg
Pressure angle	25 deg
Pitch diameter	2.000
Outside diameter	2.250
Root fillet	0.04 - 0.06
Measurement over pins	2.2908 - 2.2945
Pin diameter	0.216
Backlash reference	0.006
Tip relief	0.0005
Gear Tolerance per AGMA	Class 12

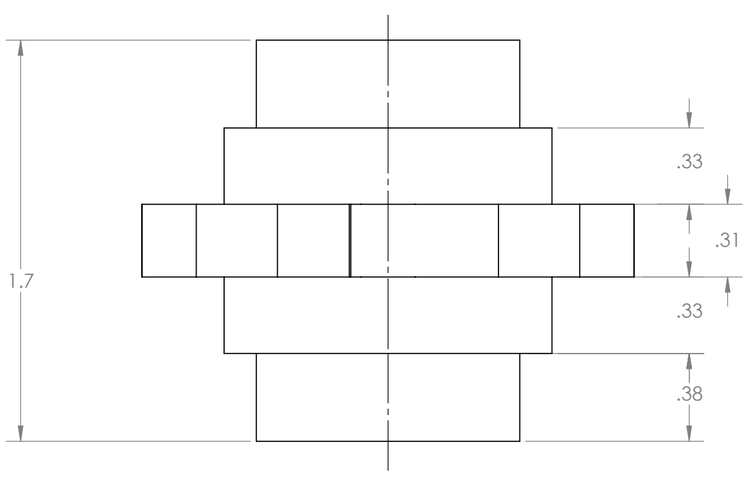

Side View
SCALE 2 : 1

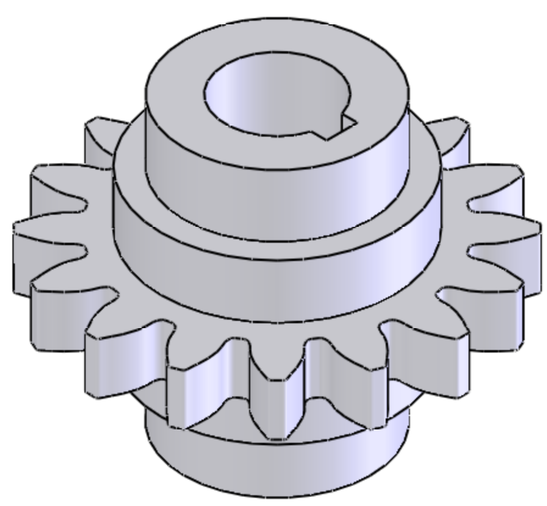

Isometric View
SCALE 2 : 1

Tooth Profile Modification

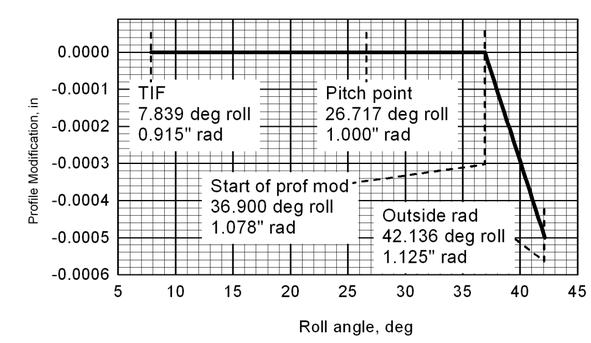

UNLESS OTHERWISE SPECIFIED:		NAME	DATE	NASA Glenn Research Center
DIMENSIONS ARE IN INCHES TOLERANCES: ONE PLACE DECIMAL ±0.03 TWO PLACE DECIMAL ±0.01 THREE PLACE DECIMAL ±0.001	DRAWN	Andrew J. Zakrajsek	6/13/08	Project: Chariot Gear Box Part: Gear 0
	CHECKED			
	ENG APPR.			
	MFG APPR.			
MATERIAL 9310 AMS 6265, forging per MIL-F-7190 Grade A, except tensile properties not required. spec # 3-548642.	Q.A.			SIZE C · DWG. NO. · REV
FINISH Plain	NOTES: 1. Quantity 2 2. Gear teeth are not modeled to scale 3. Break edges to .01 unless otherwise specified. 4. The meshing gear is Gear 1 5. Center distance to meshing gear = 4.3975"			SCALE: 2:1 · WEIGHT: · SHEET 1 OF 1
DO NOT SCALE DRAWING				