June 17, 2008
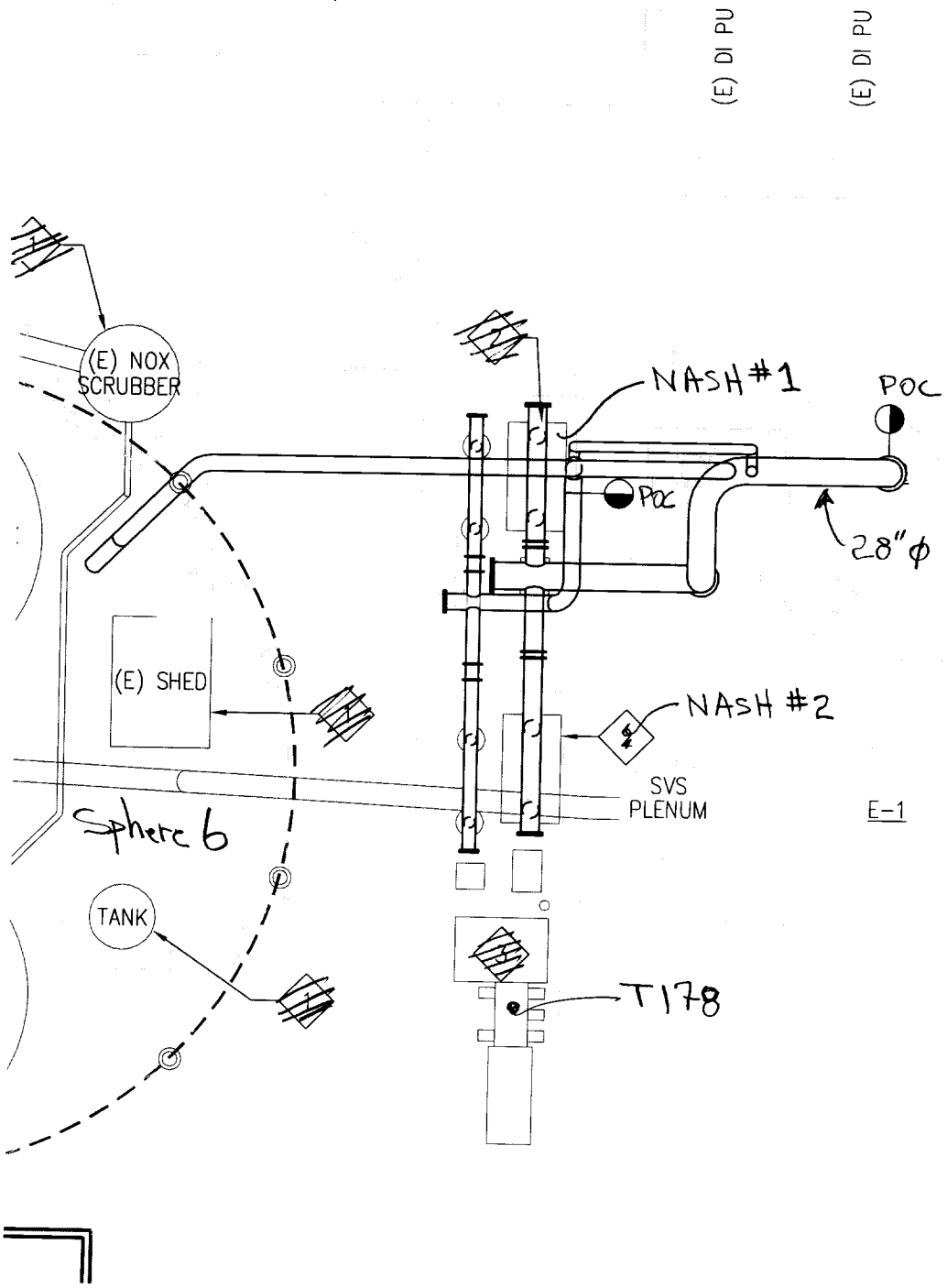
Option Item # 5