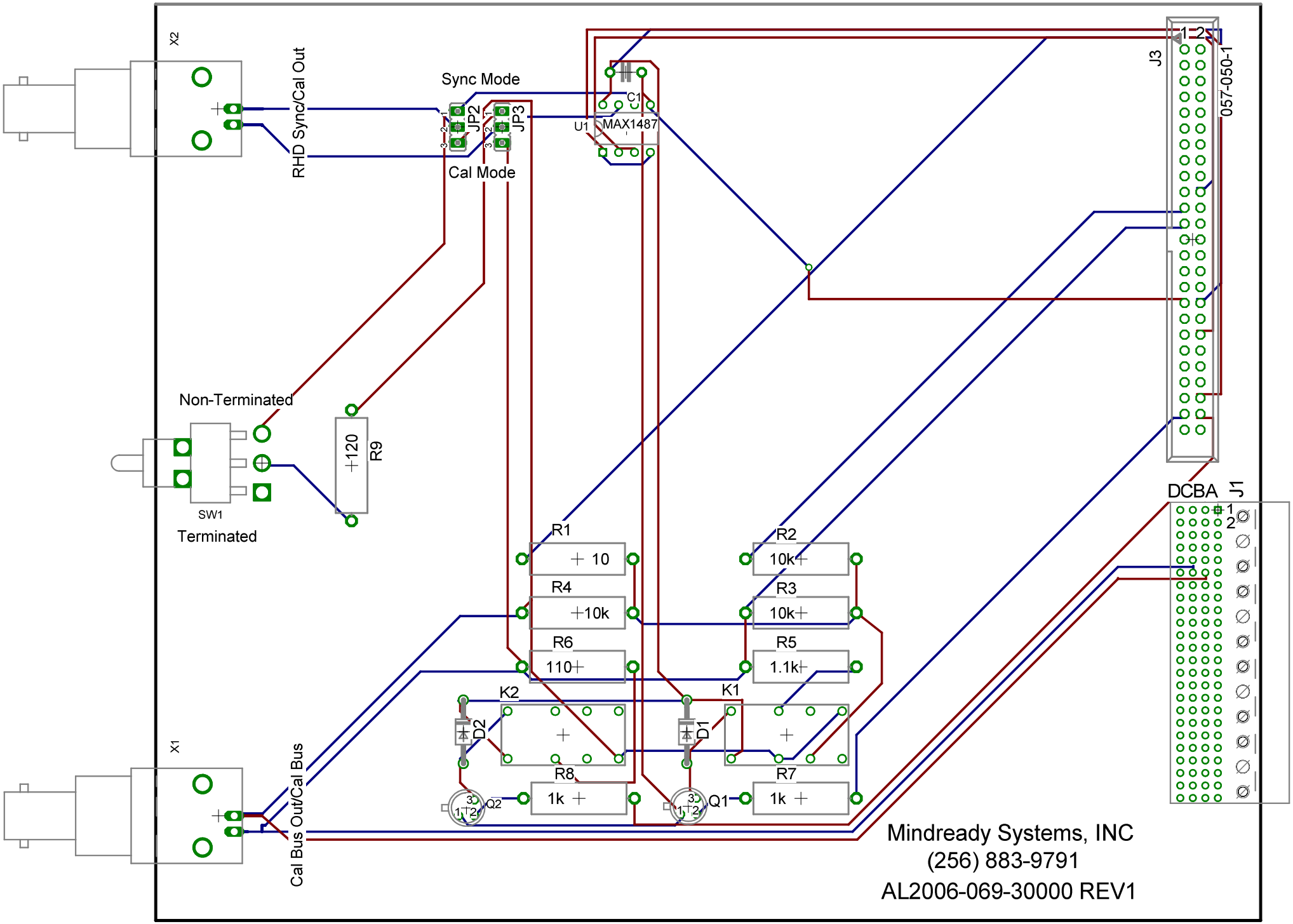
X2
RHD Sync/Cal Out
Sync Mode
JP2
JP3
Cal Mode
U1
MAX1487
C1
J3
057-050-1
Non-Terminated
SW1
Terminated
120
R9
R1
10
R2
10k
R4
10k
R3
10k
R6
110
R5
1.1k
K2
K1
D2
D1
R8
1k
R7
1k
Q2
Q1
DCBA
J1
X1
Cal Bus Out/Cal Bus
Mindready Systems, INC
(256) 883-9791
AL2006-069-30000 REV1