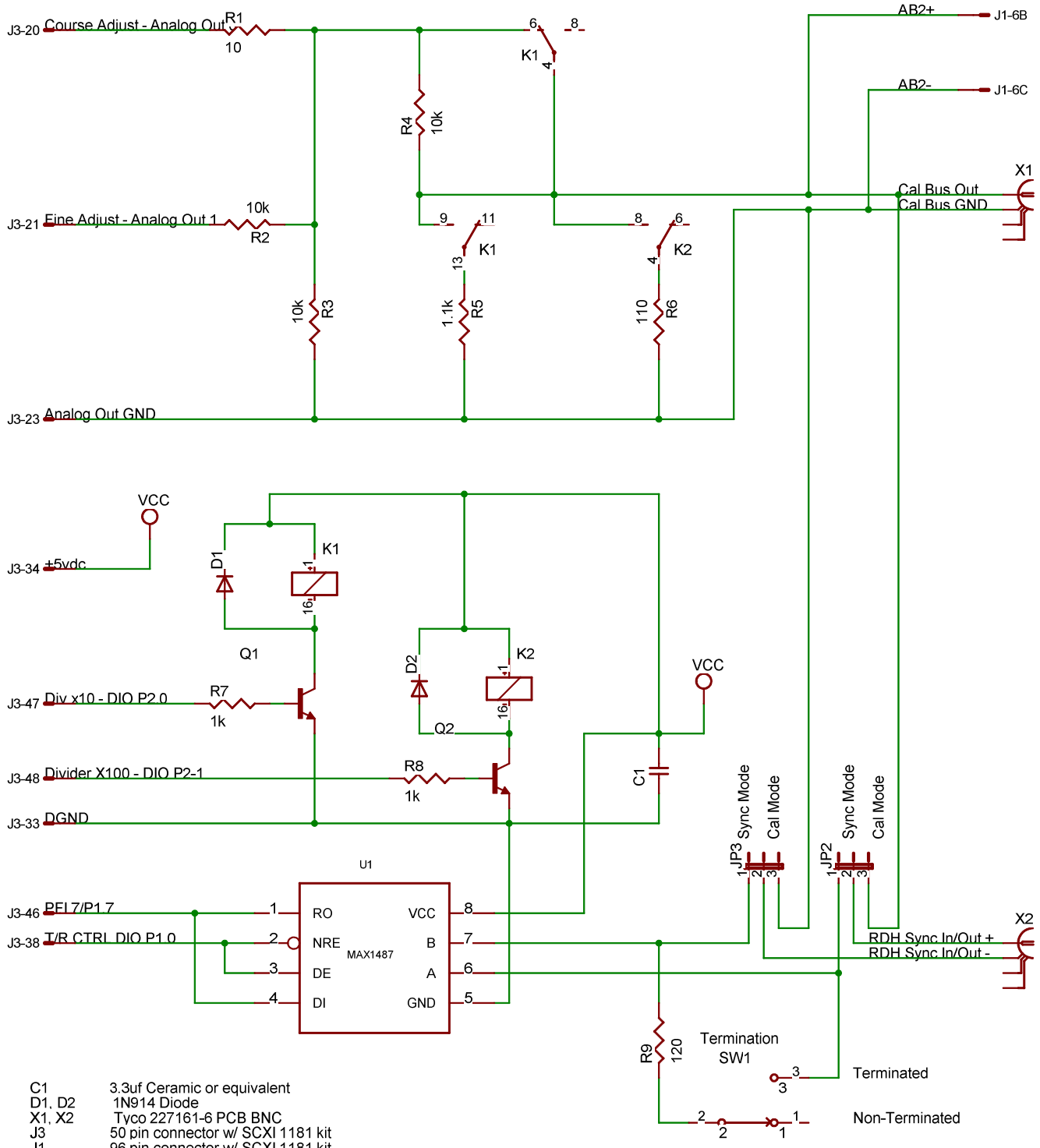

C1	3.3uf Ceramic or equivalent
D1, D2	1N914 Diode
X1, X2	Tyco 227161-6 PCB BNC
J3	50 pin connector w/ SCXI 1181 kit
J1	96 pin connector w/ SCXI 1181 kit
S1	E-Switch 100SP1T2B4M6RE
JP2, JP3	3 POS .100 Jumper
K1, K2	A830-2C5DE Relay
Q1, Q2	2N2222
R1	VISHAY BC B0207C10R005F5T
R2, R3, R4	VISHAY DALEPTF-56 10K B T-16
R5	VISHAY BC B0207C1K100F5T
R6	MULTICOMP MFR1/2W-1%-110R
R7, R8	1K OHM 5% 1/4W
R9	120 OHM 1% 1/4W
U1	MAX1487
JMP1 JMP2	Jumpers (Not shown) 3M 929955-06

TITLE: AL2006-69-3000

Document Number: AL2006-069-30000

REV:

Date: 4/04/2007 08:04:59p

Sheet: 1/1