LIGHTNING INSTRUMENTATION SYSTEM

Requirements

This procurement is to acquire components for a lightning instrumentation system that will be integrated by the John F. Kennedy Space Center. The proposed system shall meet all the requirements listed in this document. The vendor shall describe the capability of its system to meet all the requirements. This solicitation requires a quote for a sixty-four channel system. Figure 2 (for reference only) shows a sketch and the summary of the components to be included in the quote.

1. GENERAL

a. Scalable multi-channel data acquisition system capable of "window" triggering from any of its inputs and capable of accommodating from 40 to 160 channels.

b. IRIG-B time synchronization capability with multi mainframes/chassis timing synchronization to better than ±100 nsecs.

c. Automatic trigger/record/re-arm sequence.

d. Capability to record in segmented memory mode.

e. Remote status/setup/configuration capabilities including capability to download waveforms remotely through Ethernet, check status, and reconfigure the system.

f. Digitizers shall be isolated from the mainframe/chassis via fiber optics. The optical signal has to be converted back to electrical to be recorded by the mainframe/chassis.

g. Overall system accuracy shall be at least 0.5% FS at 25ºC and 1% throughout the full temperature range (0º to 70º C).

2. TRIGGERING

a. Segmented memory shall allow for 10ms-20ms time segments with ***zero dead time*** between subsequent segments without the use of parallel channels/acquisitions or redundant hardware.

b. System shall be capable of recording up to 40 segments within two(2) seconds. ***No dead time between acquisitions***.

c. Any channel shall be capable of triggering the acquisition. In case of multiple transient recorders, the mainframe(s)/chassis where transients are detected shall have the capability to trigger the other mainframe(s)/chassis.

d. "OR" window triggering. Each mainframe/chassis shall trigger any time any of the signals being monitored leaves a predefined window. Windows are defined by high and low threshold levels. Windows for different channels on the same mainframe/chassis may be different.

e. System shall automatically skew the channels to compensate for different fiber optic cable lengths. Channels in the same mainframe/chassis shall be skewed within a tolerance of ±20 nsecs or better.

f. System shall have a pre-trigger capability of 0 to 100% of the recording time window.

3. ISOLATION

a. Fiber optic links are required to bring signals from the field to the transient recorders inside instrumentation room(s). Fiber optic links shall transmit signals through different fiber lengths, with the maximum cable run of about 4000 meters through at least one fiber optic bulkhead connector.

b. Close-loop verification capabilities to allow end-to-end channel tests, fiber, and power status through the network.

c. Most fiber optic transmitters will be installed outdoors in weatherproof enclosures next to the sensors and required to survive stringent environmental requirements: temperature from 0 to 70°C and the vibration profile shown in Figure 1.

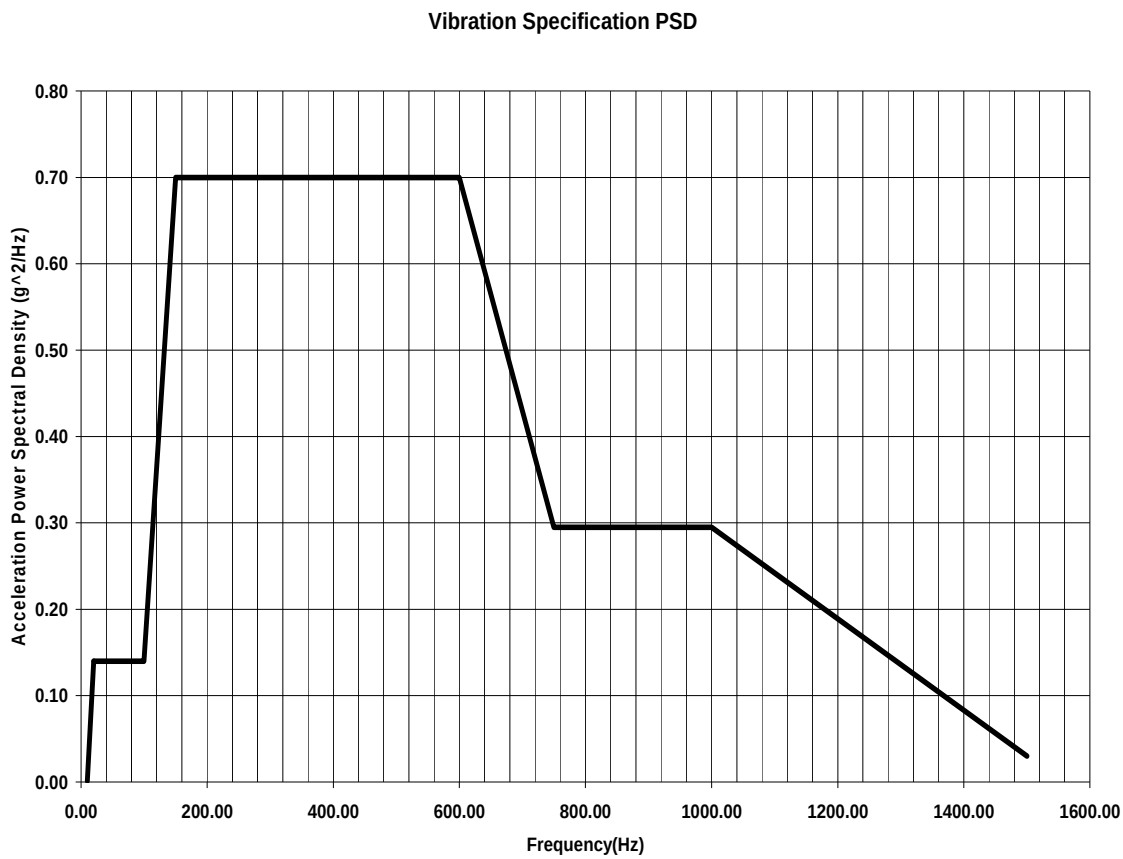

Figure 1. Vibration Specification, Acceleration=23.045 g RMS, test time = 30 seconds per axis, axis orientation=3 axis.

d. Fiber optic receivers along with the transient recorders will reside in temperature controlled rooms.

e. Fiber optic digitizers shall be controlled from the mainframe/chassis to switch its analog coupling to: ground reference, DC couple, AC couple, and a reference voltage. The reference voltage is used to verify the analog circuit of the digitizer.

f. Fiber optic digitizers shall have a digital output controllable from the mainframe/chassis. The mainframe/chassis will broadcast a signal to all the digitizers on the field to switch their power source.

g. Fiber optic digitizer's input shall be bipolar with a minimum programmable/adjustable input range of ± 200mV with a high input range of at least ± 10V.

h. Fiber optic digitizers shall have an external power connector and shall accept DC power.

i. Fiber optic digitizers shall have a calibration software/procedure to allow for in house calibration that shall not require the units to be sent back to the vendor for calibration.

4. SAMPLING

a. System shall support at least two types of measurements with 10MHz and 25MHz analog bandwidth.

b. Sampling rates shall be at least four times the analog bandwidth.

5. DATA STORAGE

a. Transient recorders shall be capable to locally store at least 80 segments per channel.

6. MISCELLANEOUS

a. System shall generate automated reports in .pdf format.

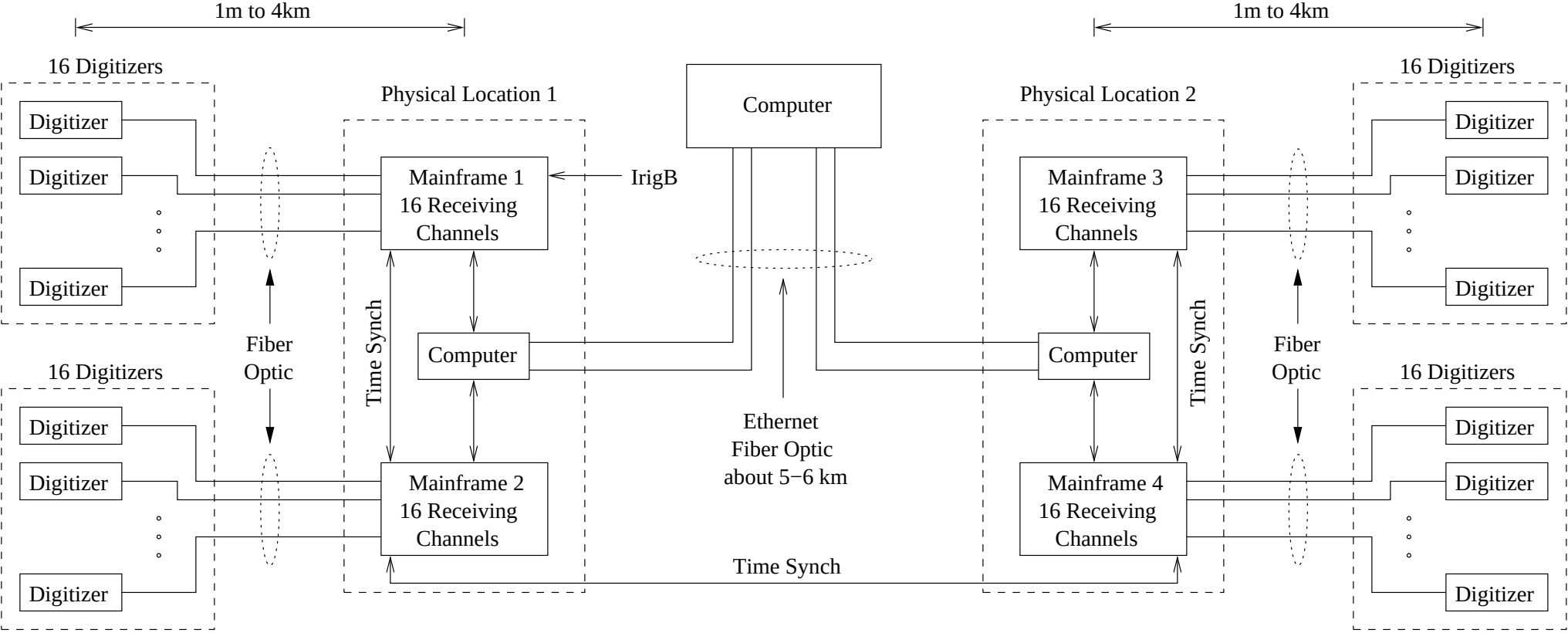

Quote summary:
− Four (4) mainframes/chassis rack mountable
− Sixty−four (64) receiving channels (or "n" number of cards if multiple channels per card)
− Sixty−four (64) digitizers/transmitters (or "n" number of transmitters if multiple digitizers per transmitter)
− Four (4) time synchronization boards
− One (1) Irig−B timing board
− Required software and options to operate the system as described in the solicitation and shown in this diagram
− Note: neither the computers nor the fiber optic cables are part of this solicitation

Figure 2