# <u>Specification</u>

## Energy Absorbing Struts for Impact Test Article

### 1.0 Background

The NASA Langley Research Center (LaRC) is conducting advanced development and testing of a crew impact attenuation system for Earth landing of the Orion Crew Module (CM). To support the development program, NASA intends to procure energy absorbing struts for tests of a conceptual attenuation system. The impact attenuation system consists of a pallet, crew seats mounted on the panel, crew members, and a set of nine (9) struts to attenuate landing loads. The ends of the struts will be attached to the pallet and structural support on the vehicle. Figure 1 shows the attenuation system with main structural components of the crew module. Figure 2 provides a representation of test article NASA LaRC will use for strut system testing. This test article will be used for vertical drop tests only and allow rotation over a full 360 degree range of pitch. To obtain the desired acceleration upon impact, crushable material will be installed on the bottom of the test article. The crushable material is contoured to match the acceleration profile to represent predicted Orion CM landing impact loads. To simulate a CM tumble event, multiple vertical drops can be performed at predetermined pitch angles.

### 2.0 Introduction

This specification is for procurement of energy absorbing struts for testing with a landing impact test article at NASA Langley's Landing and Impact Research Facility. The struts are to comply with geometrical and performance requirements specified and based on a demonstrated heritage in aircraft or other relevant applications with little modification. The struts to meet this specification are expected to operate on mechanical deformation of elements and based on a wire or strap bender or inversion tube concept. After delivery, NASA LaRC will perform static and dynamic tests with a sample of individual struts to measure and verify performance. The objective of this procurement is to obtain struts with consistent and well-characterized load versus displacement performance. For the attenuation system testing, NASA LaRC will develop analytic models of the struts and test article and its components. NASA LaRC will use tests results to compare to predictions from the analytical model and evaluate overall system performance. It is anticipated that ten (10) impact test with the test article and struts will be conducted at NASA LaRC. The Contractor shall provide the specified quantity of struts and all materials and procedures for refurbishment after tests.

### 3.0 Requirements

The contractor shall deliver energy absorbing struts that complies with all specified geometric, performance and other salient requirements identified in this document.

LaRC will conduct systems tests with a set of nine (9) struts which consists of struts arranged in the nine (9) numbered locations shown in Figure 1. The contractor provided struts shall meet the

nominal load rating in Table 1 as well as the nominal length also indicated within the table. For the purpose of this specification, the struts are designated by numbers 1 through 9.

**Table 1. Summary of Struts**

| Strut No. | Nominal Load Rating (lb) | Nominal Length (inches) | Quantity Required |
|---|---|---|---|
| 1 | 4500 | 35.4 | 2 |
| 2 | 4500 | 35.4 | 2 |
| 3 | 4500 | 38.9 | 2 |
| 4 | 4500 | 38.9 | 2 |
| 5 | 4500 | 46.6 | 2 |
| 6 | 4500 | 46.6 | 2 |
| 7 | 8500 | 45.6 | 3 |
| 8 | 8500 | 45.6 | 3 |
| 9 | 4500 | 38.2 | 2 |

3.1 Strut Loads

The struts shall be designed for two different load ratings. The struts shall have a constant load versus displacement performance characteristic similar to the response shown in Figure 3. The load rating of the struts to be provided shall be +/-500 lbs of the specified nominal loads of 4500 lb or 8500 lb. For multiple drop test cases of the complete attenuation system to be conducted by NASA LaRC, struts may stroke in a direction opposite of the stroke direction that occurred during the initial drop. The return stroke, which occurs in the opposite direction of the prior stroke direction, shall have a constant load versus displacement characteristic.

3.2 Stroke Range

Each strut shall be designed for bi-directional stroking with a range of at least ± 8 inches from its initial position.

If bi-directional stroking struts are not available, the contractor shall provide a uni-directional stroking strut with a stroke range of a minimum of 8 inches.

3.3 End Connections

The end connections for all struts shall be identical. The end connections shall be a standard high misalignment male spherical bearing rod end with a bore diameter of 0.625 inch bore, ¾-16 right hand or left hand threads, 1.625 inch minimum thread length, and a minimum static load capacity of 20,000 lb. Each strut shall have one right hand and one left hand rod end. Each rod end shall be secured with a rod end locking washer and plain jam nut.

3.4 Rod Load Cell

One complete set of nine struts (numbered 1 through 9) of the attenuation system shall include an in-line rod load cell to measure loads in each strut during impact tests. The load cell shall be a rod end in-line compression-tension load cell with 15,000 lb minimum load capacity in tension and compression, threaded ends to attached to rod or struts housing, accuracy of 0.25% or less of full scale, 10 VDC input voltage, un-amplified rated output of ±1 milli-volts per volt, minimum operating temperature range of -40 to 160 deg F, and maximum temperature effect on reading of ±0.005 %/ degree F. A factory calibration sheet shall be provided with each rod load cell. A total of nine (9) rod end load cells are required to instrument each strut for a system test.

3.5 Strut Length

The nominal overall strut lengths shall be as shown in Table 1. The overall strut length is the distance between centers of the end connection bores and includes strut, extensions, and load cell. The overall strut lengths provided shall be within ±1/4 of the nominal lengths.

If extensions are used to increase the length of a common energy absorbing strut element to obtain the overall length requirements, the extensions shall have threaded ends and accommodate the in-line rod load cell.

3.6 Quantity of Struts

The quantity of complete struts for each strut number to be provided is given in Table 1. A total of twenty (20) struts shall be provided.

3.7 Refurbishment Materials for Tests by LaRC

NASA LaRC will conduct static and dynamic tests of a sample of individual struts to verify performance and up to ten (10) complete system tests with nine struts. Following each test, the struts will be refurbished by replacement of energy absorbing components (i.e. wires, tubes, etc). The Contractor shall provide all required materials to refurbish each of twenty (20) struts ten (10) times for a total of 200 refurbishments. The Contractor shall assume the tests will be conducted at full loads. The refurbishment materials shall include any special tools and detailed procedures to refurbish the struts. The Contractor shall provide two (2) rod end load cells that are the same as that provided in Para 3.4 for the nine struts as refurbishment parts.

## 4.0 Schedule of Milestones and Deliverables

4.1 Preliminary Strut Technical Information

Within 15 calendar days after award, the Contractor shall submit information on the struts that includes concept of operation, stroke range, load rating, manufacturer's data on end connection, manufacturer's data on rod load cell, assembly approach to meet length requirements, and list of refurbishment materials.

4.2 Final Strut Technical Information

Within 50 calendar days after award, the Contractor shall submit a technical information package that includes a description of strut operation, outline drawing of the strut with overall dimensions, stroke range, load rating, manufacturer's data on end connection, predicted load versus displacement performance, manufacturer's data on rod load cell, assembly to meet length requirements, and list of refurbishment materials.

4.3 Struts and Refurbishment Materials

The contractor shall deliver all items and all refurbishment materials within 60 calendar days after award.

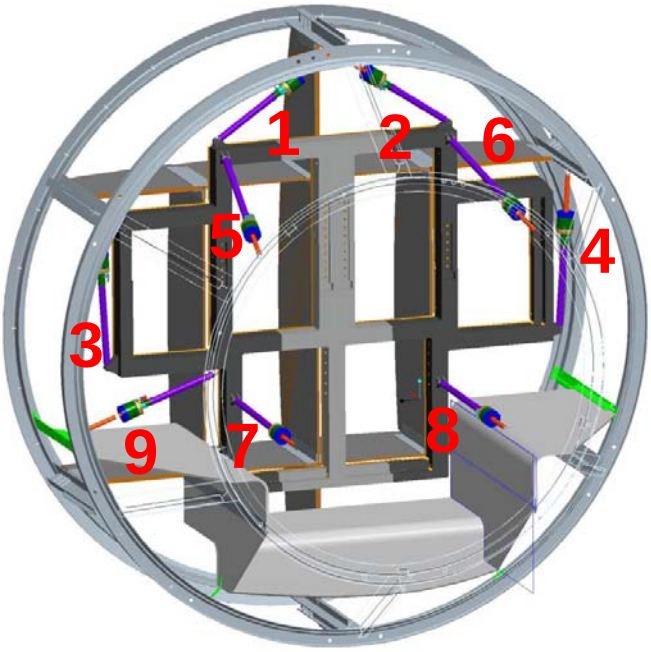


**Figure 1. Set of Nine Struts with Pallet and Main Crew Module Structural Components**

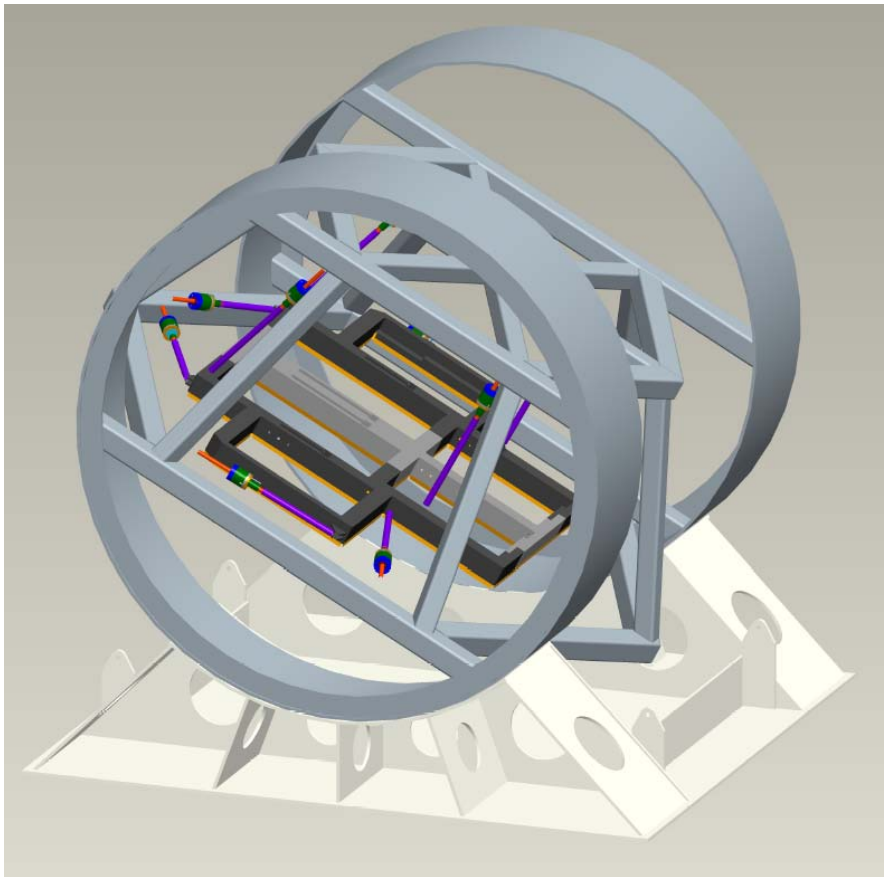

**Figure 2. LaRC Crew Impact Attenuation System Test Article**

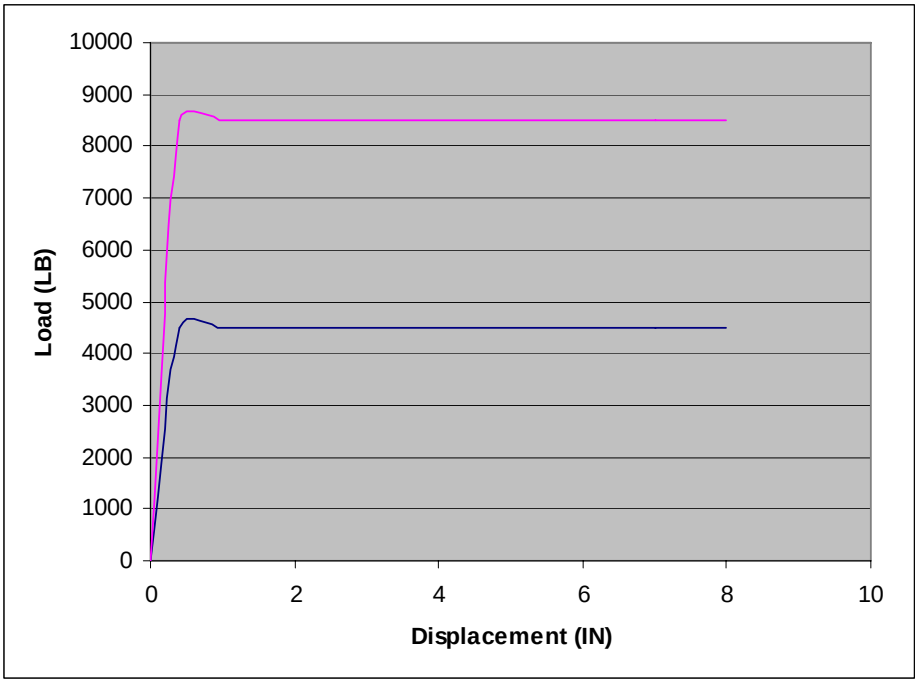


**Figure 3. Typical Load vs. Displacement Profile**