LTR	ZONE	REVISION		DATE	APPROVAL
C		1. REDRAWN TO CAD/CAM	ENG	4/8/91	
			APP	4-11-91	
			QE	4-17-91	
			MATL		
			STRESS	4/19/91	
			AUTH	4/22/91	

RELEASED
Date 4-25-91 Rev C Int CY

ITEM	DIMENSION "A"
-001	Ø.259 – .262
-002	Ø.253 – .256

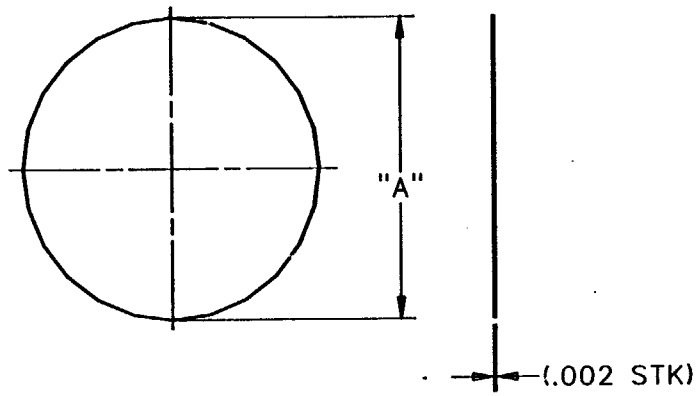

	PART NUMBER	DESCRIPTION	MATERIAL	SPECIFICATION	ITEM NO.
	-002	DISK-NSD	1100 (FULL HARD) ALUM ALY .002 (STK)SHT	QQ-A-250/1E	
	-001	DISK-NSD	1100 (FULL HARD) ALUM ALY .002 (STK)SHT	QQ-A-250/1E	

UNLESS OTHERWISE SPECIFIED: DIMENSIONS ARE IN INCHES. TOLERANCES ON:
.0 ± .10 .000 ± .010
.00 ± .03 ANGULAR ±

SURFACE FINISH IN MICROINCH RMS UNLESS NOTED OTHERWISE 125

NEXT ASS'Y SEB26100094

EQUIPMENT TYPE
☒ FLT HDWR ☐ OTHER (SPECIFY)
☐ GSE WITH I/F TO FLT HDWR

SIGNATURES		DATE
DR	L.G. MASLEY	12-15-78
ENG	J. CROWLEY	6-6-80
CH	JC	6-6-80
APP	L.J. PRICE	6-17-80
AUTH	R. TAEUBER	6-9-80
MATL	STEINTHAL	6-9-80
QE		
STRESS		
	S. HOOPER	6-6-80
	WR11563	

NATIONAL AERONAUTICS & SPACE ADMINISTRATION
LYNDON B. JOHNSON SPACE CENTER HOUSTON, TEXAS

DISK-NSD
(NASA STANDARD DETONATOR)

CODE IDENT NO.	SIZE	DWG NO.	REV.
21356	B	SDB26100089	C

SCALE 10/1 PPD EP5 SHEET 1 OF 1

1. INTERPRET DRAWING PER DOD-STD-100

NOTES: UNLESS OTHERWISE SPECIFIED