CAGE	DWG. NO.		SH	REV.
25305	SHOULDER		2	

REVISION HISTORY

ZONE	REV	DESCRIPTION	DRAWN	CHECKED	LEAD ENGR	BRANCH	DATE

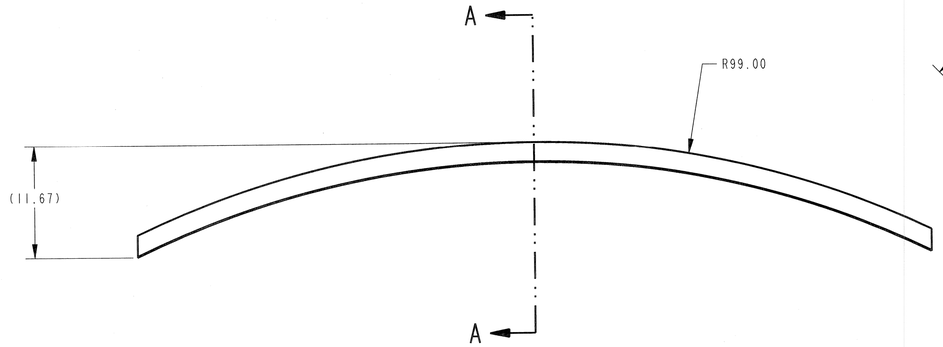

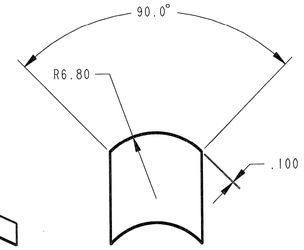

SECTION A-A

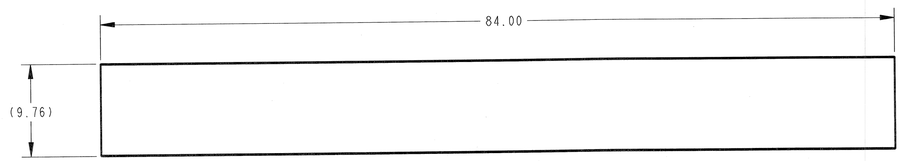

-2 SHOULDER SKIN

SCALE 1/8

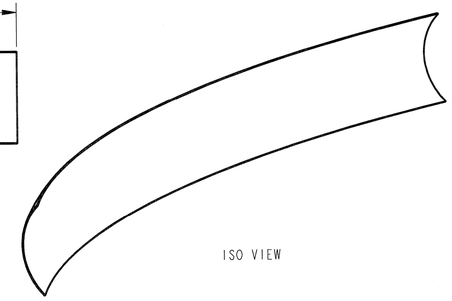

ISO VIEW

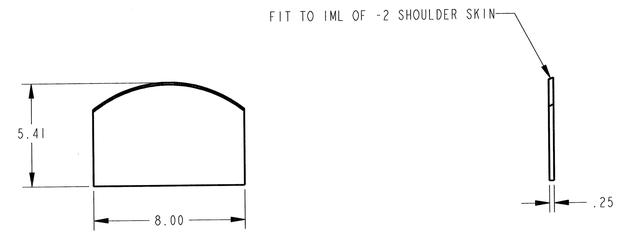

-3 SHOULDER STAND #1

SCALE 1/4

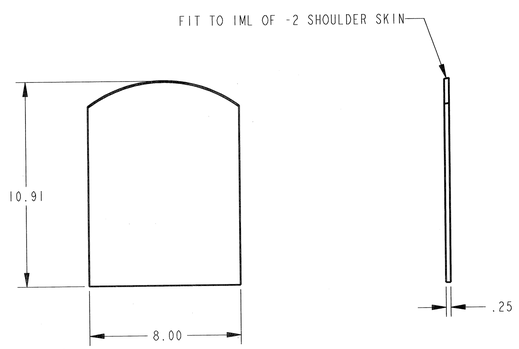

-4 SHOULDER STAND #2

SCALE 1/4

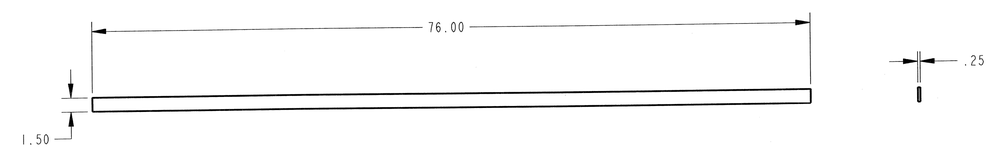

-6 SHOULDER BRACE

SCALE 1/8

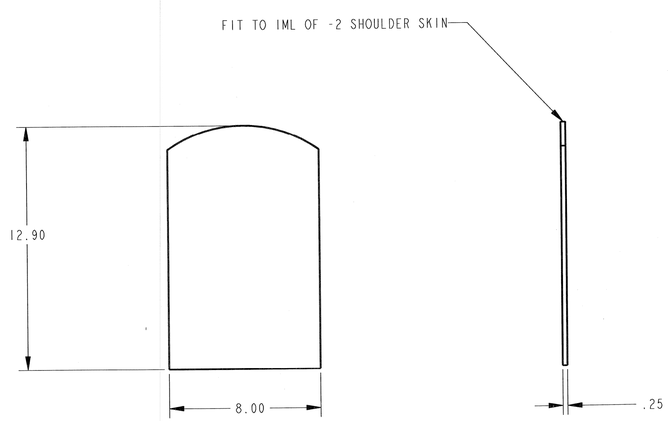

-5 SHOULDER STAND #3

SCALE 1/4

NASA LANGLEY RESEARCH CENTER HAMPTON, VA 23681-2199	SIZE	CAGE CODE	DWG. NO.	REV.
DRAWN B.EMMETT	D	25305		-
CHECKED	SCALE 1/8		SHEET 2 OF 2	