Phoenix Missile Hypersonic Testbed (PMHT)

System Concept Overview

Thomas Jones

NASA Dryden Flight Research Center

(ARTIST'S RENDITION)

October 22, 2007

Need and Goals

- Need:
  - A low cost hypersonic research flight test capability to increase the amount of hypersonic flight data to help bridge the large developmental gap between ground testing/analysis and major flight demonstrator X-planes
- Goals:
  - Develop an air launched missile booster research testbed to:
    - Accurately deliver research payloads
    - Through programmable guidance
    - To hypersonic test conditions
    - At low cost
    - With a high flight rate

Phoenix Missile Hypersonic Testbed

Research Objectives:

- Provide subscale flight research data beyond the envelopes of existing piloted/ unpiloted flight test platforms – Increase the amount of flight data
- Bridges the large developmental gap between ground testing/analysis and major flight demonstrator X-planes
- Perform research at real flight conditions
- Test a variety of experiments with many launches

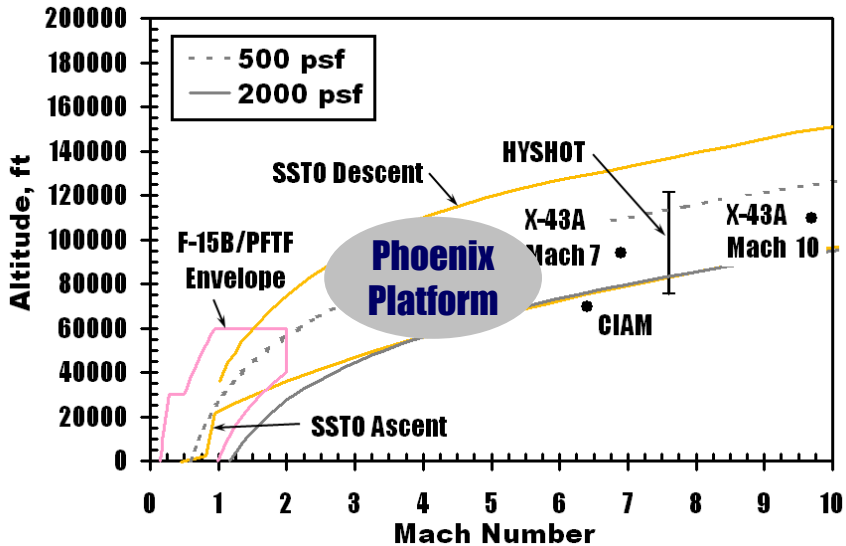

Research Approach:

- Develop low-cost super/hypersonic flight research facility using surplus AIM-54s and NASA F-15B
- Develop research payload volume (~6ft3) by removal of warhead/GNC/radar hardware
- Utilize small light-weight avionics to replace existing GNC hardware

Benefits of Approach:

- Low cost
- Guided capability allows placement of payload at desired conditions
- Launch altitude, attitude, and location are flexible
- Research payload can be checked-out in a captive-carry flight environment at altitudes
- Leverages NASA Dryden's existing aircraft assets and NAWC Weapons Division's operational experience

PMHT Concept

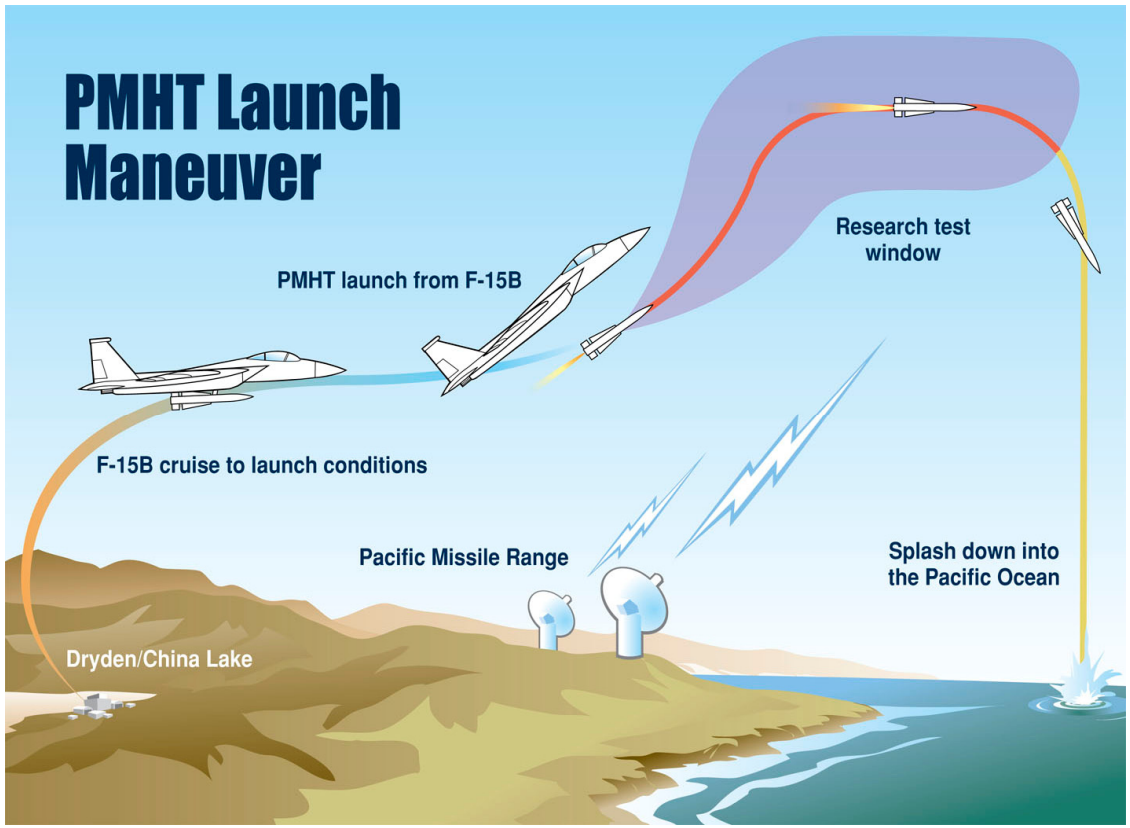

PMHT would be air-launched from NASA F-15B using F-14 launch hardware from within F-15B flight envelope and internally guided to test condition

- Utilize surplus AIM-54 Phoenix missiles from US NAVY as booster for Supersonic/ Hypersonic Flight Research
- Utilize surplus F-14 hardware to mount Phoenix missile to NASA F-15B
- NASA F-15B operates from Dryden Flight Research Center
- F-15B transits to Pacific Missile Test Range at specified launch conditions (alt/Mach)
- Missile launch from F-15B and internally guided to test condition(s)
- Missile descent and splashdown into the Pacific
- Alternate mission profile could be operated over land within restricted airspace and impact the ground for payload recovery

Development Objectives

- 6 ft^3 of payload capacity
- Exceed (with different trajectories):
  - Mach 5 with at least 500 psf dynamic pressure

    or
  - Dynamic pressure of 2000 psf with at least Mach 3
- Unit test cost under $500K
- Test flight rate minimum of 2 flights/year
- Utilize surplus air launched missiles and NASA aircraft

Possible Research Payloads

- Propulsion
  - Super/hypersonic inlet flight validation
  - Scramjet engine component validation including combustors and isolators
  - Fundamental combustion and flameholding
- Aerodynamics
  - Boundary layer laminar to turbulent transition experiment
  - External burning for transonic drag reduction
  - Supersonic parachute testing
- Systems
  - High speed flush air data system (FADS) validation
  - Avionics system flight validation
- Materials & Structures
  - High temperature seals
  - High temp leading edge validation
  - High temp instrumentation
  - TPS validation
- Guidance, Navigation, and Controls
  - Hypersonic control law validation
  - High speed GPS testing
  - Precision impact guidance algorithms
- Science
  - High altitude research
- Others?

Possible Research Program Participants

- University Collaboration
  - Interested in utilizing the ARMD NASA Research Announcement (NRA)
- Industry Collaboration
- NASA Specific
  - ARMD
  - ESMD
  - SMD
- Other Government Agencies
  - DoD
  - DARPA
  - etc.

PMHT Configuration

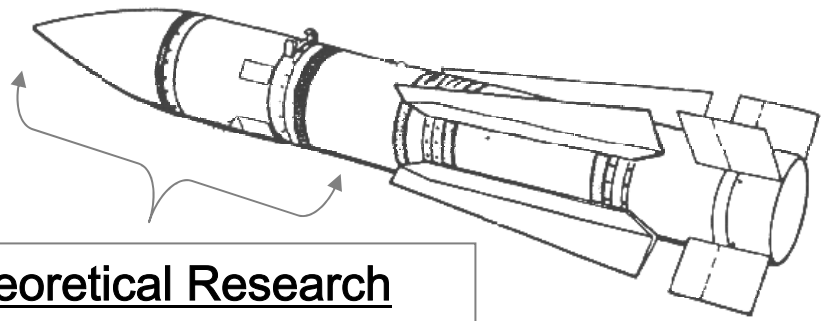

Theoretical Research Payload Capability

Diameter - 15 inches
Length - 70 inches
Effective Volume - ~6 cu ft.
Allowable Weight - ~250 lbs.

Utilize surplus flight-proven F-14 hardware and NAWC-WD experience with missiles

Utilize experience with F-15B flight test fixtures such as PFTF

Design Concept

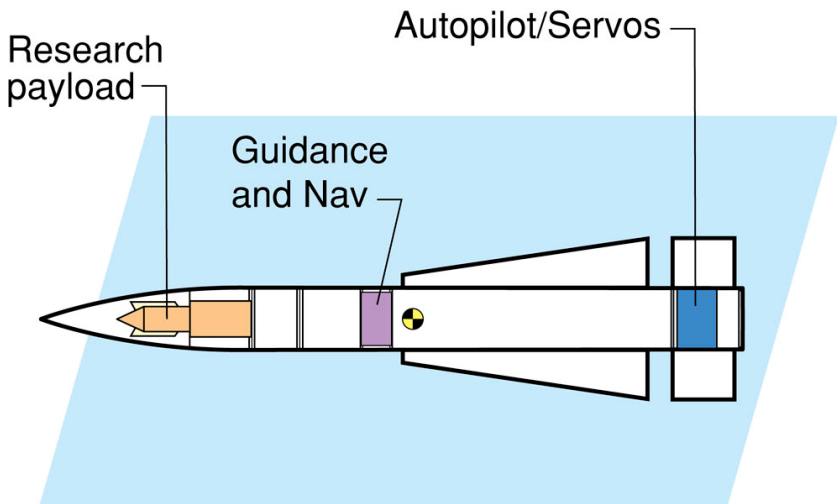

AIM-54 Internal Hardware Schematic

- All internal components removed from guidance and armament sections to make space for payload and new guidance computer and INU
- Components to be removed include warhead, old guidance computer, and radar tracker

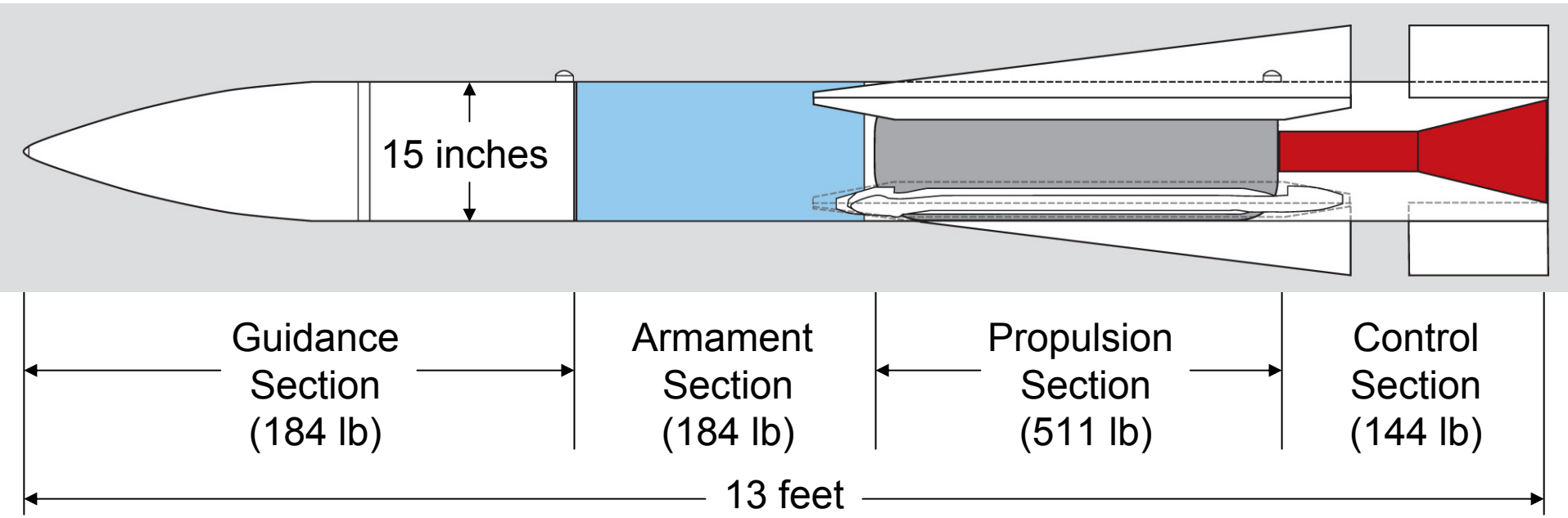

PMHT Configuration

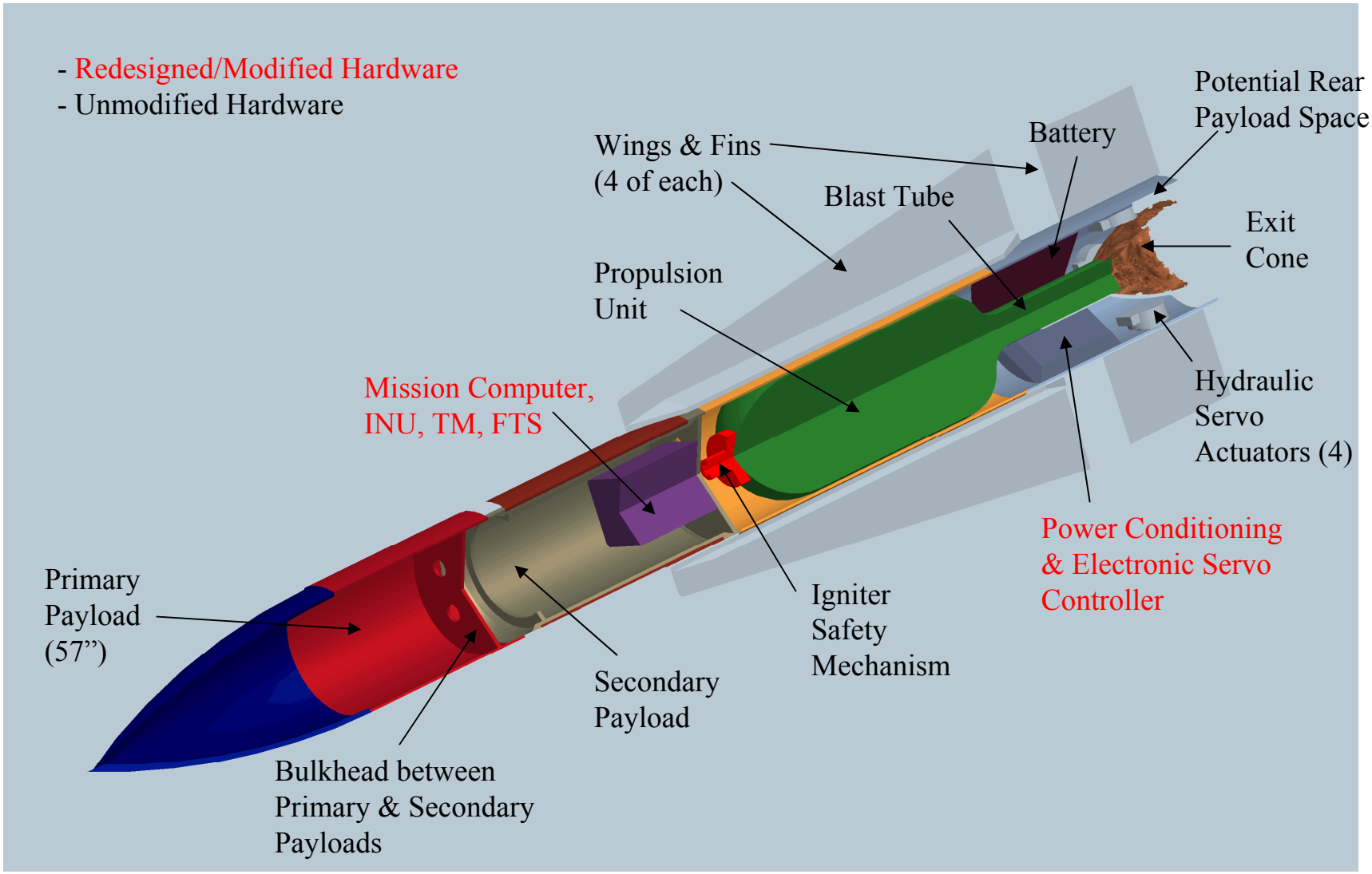

New Guidance and Armament Section Profiles

All dimensions in inches, unless noted otherwise

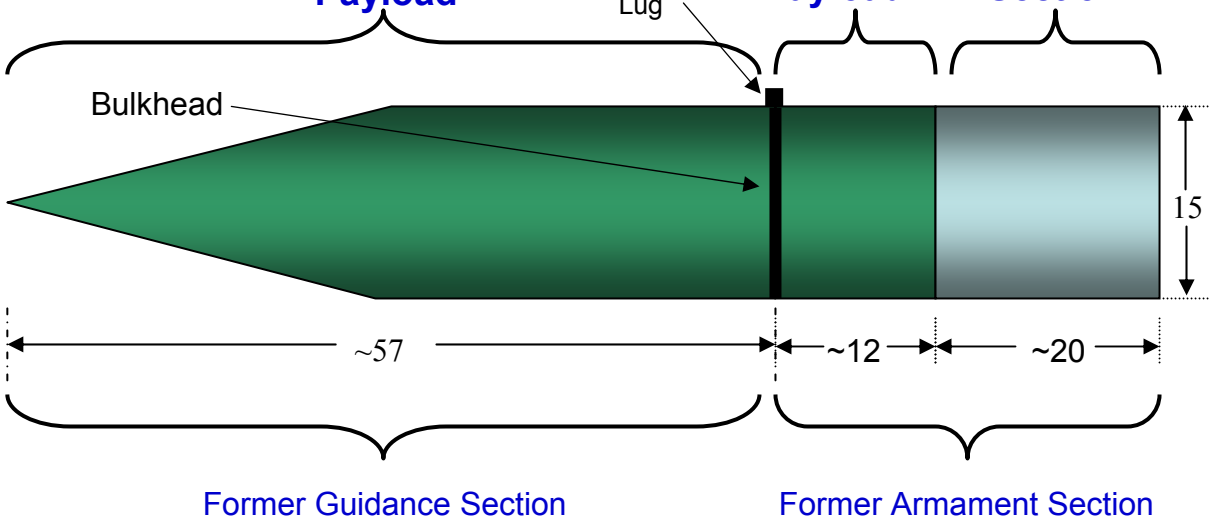

- Payload volume consists of two areas (primary and secondary) separated by a bulkhead at the location of a launch lug
- All internals of guidance and armament sections removed
- Secondary payload immediately aft of primary
- Length of secondary payload is TBD, but in the neighborhood of 12-18 inches
- Payload instrumentation and power interfaces are TBD

Nomenclature

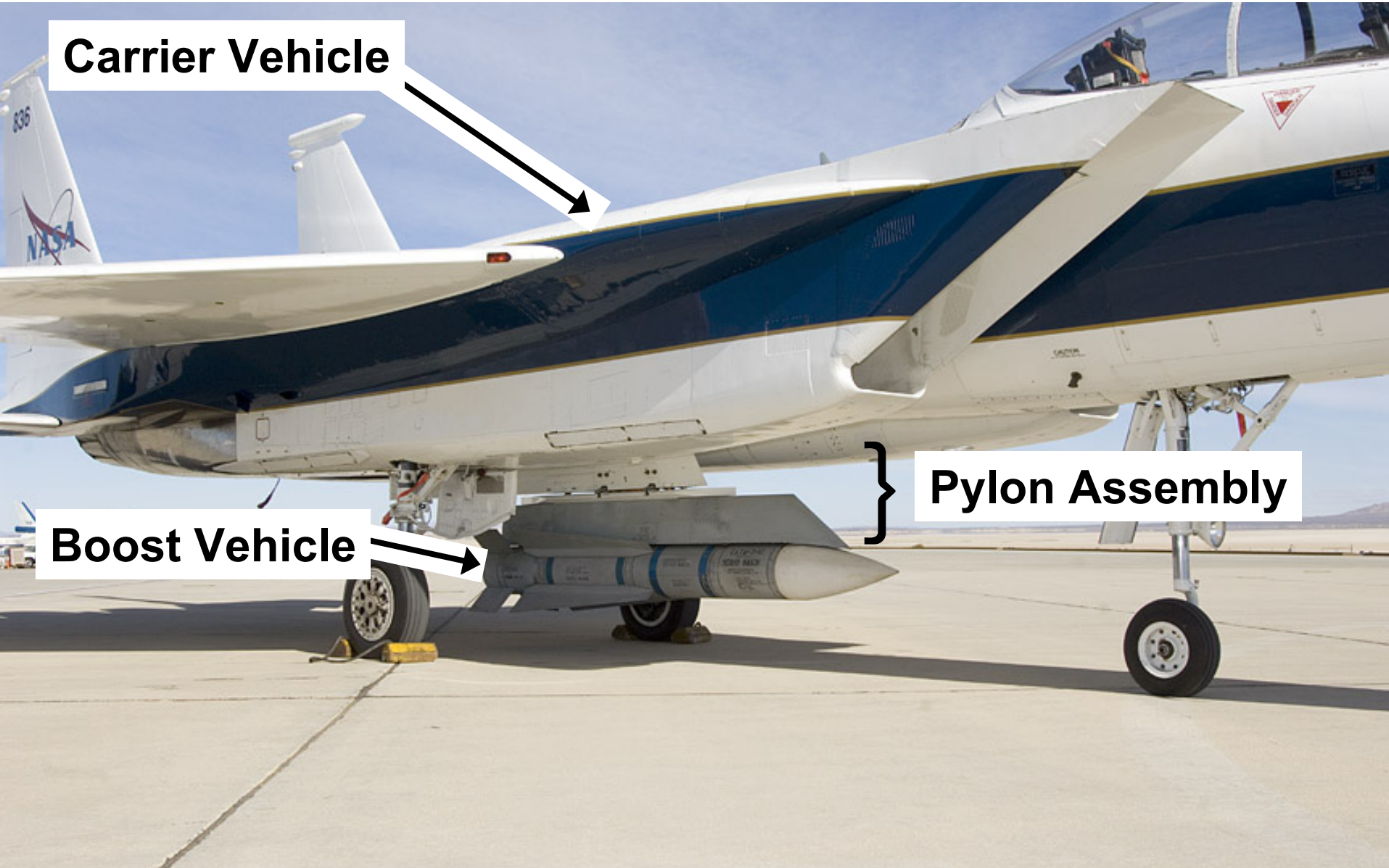

PMHT Stack

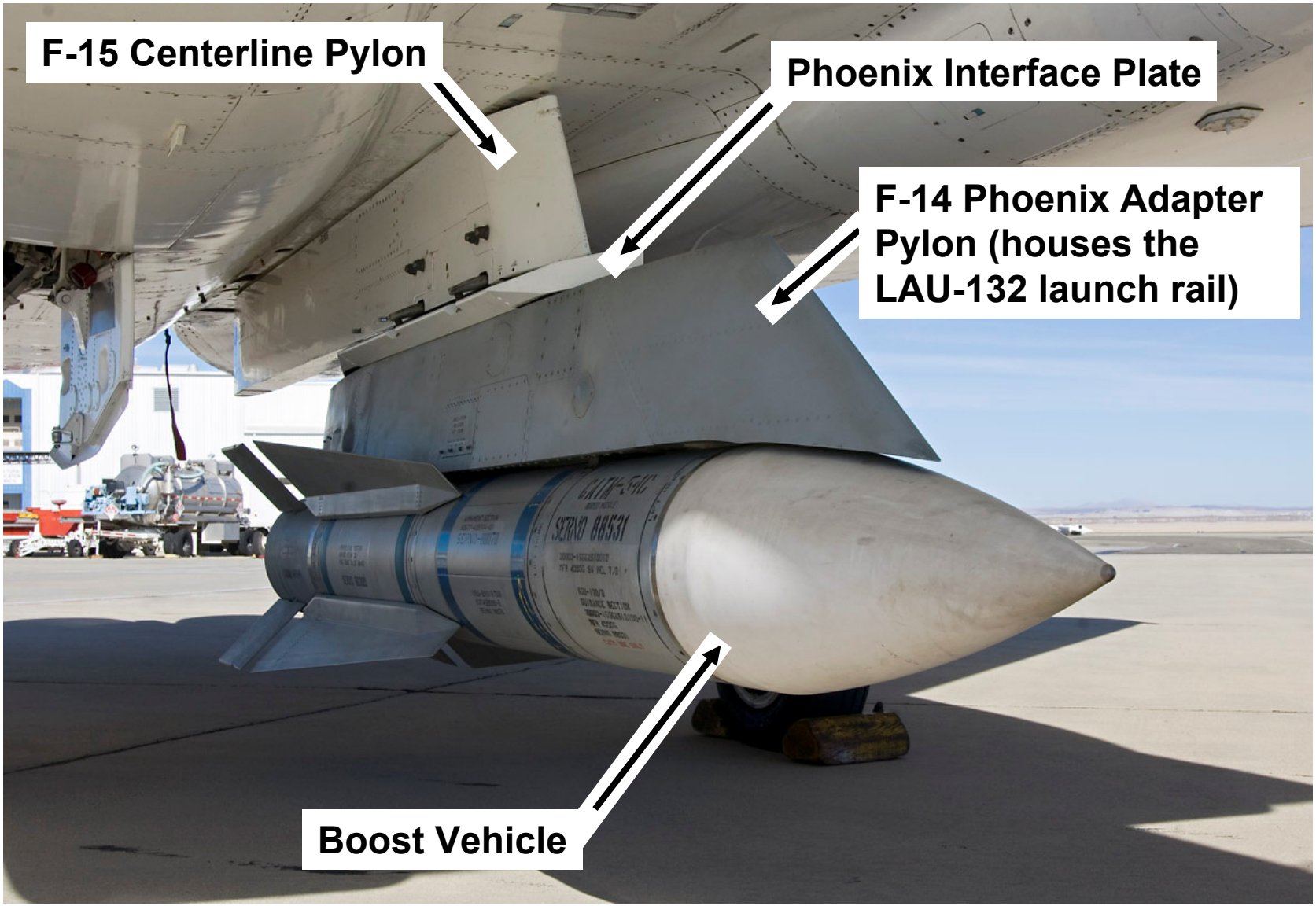
F-15 Centerline Pylon
Phoenix Interface Plate
F-14 Phoenix Adapter Pylon (houses the LAU-132 launch rail)
Boost Vehicle

Systems Concept

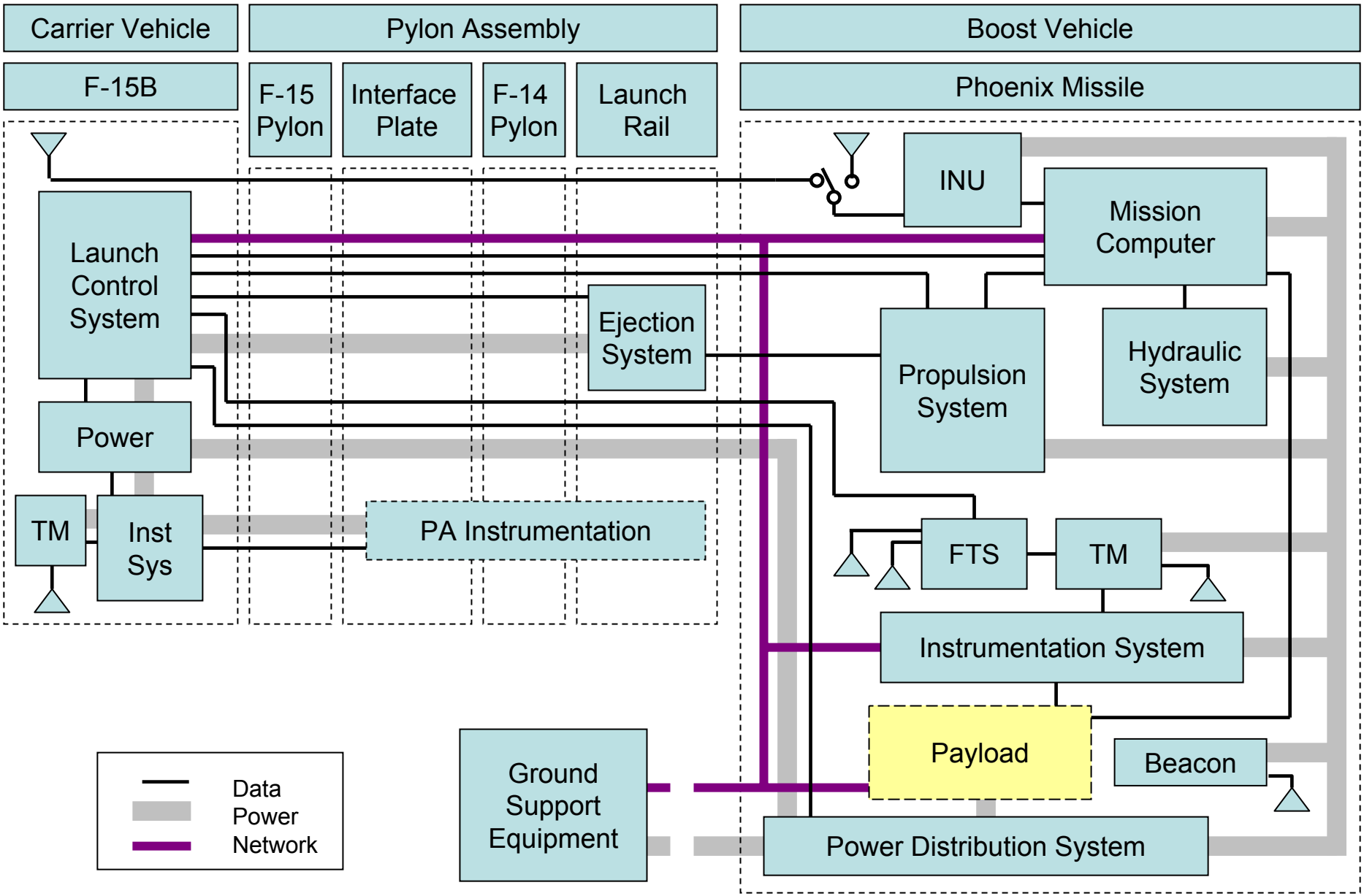

PMHT Preflight Activities

- Mount the payload-integrated missile on the aircraft
- Power aircraft using external ground power
- Power Phoenix on external power via cockpit switched power relay
- Connect Electronic Ground Servicing Equipment to boost vehicle
  - Upload guidance waypoints for planned trajectory
  - Upload controller and/or payload constants
- Verify system health by monitoring from aircraft rear cockpit display
  - Payload and missile systems instrumentation data available through on-missile data bus
- Verify INU performance
- Command MOAT (Mission on Aircraft Test) from rear cockpit
- Ready A/C for takeoff

Notional Ground Path

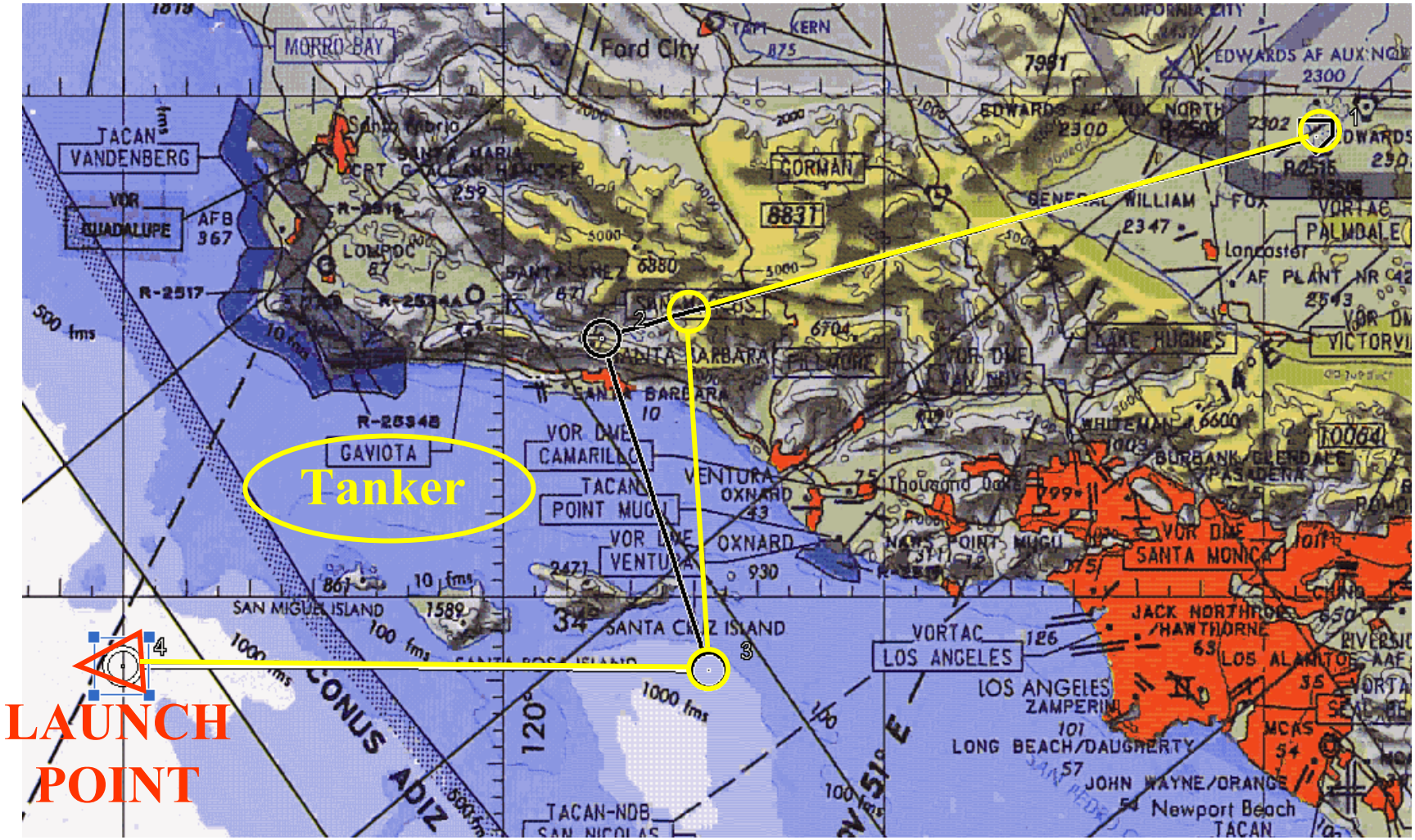

Missile data is telemetered through Western Missile Pacific Test Range to Control Room for Immediate Data Review

Sample Theoretical Trajectories

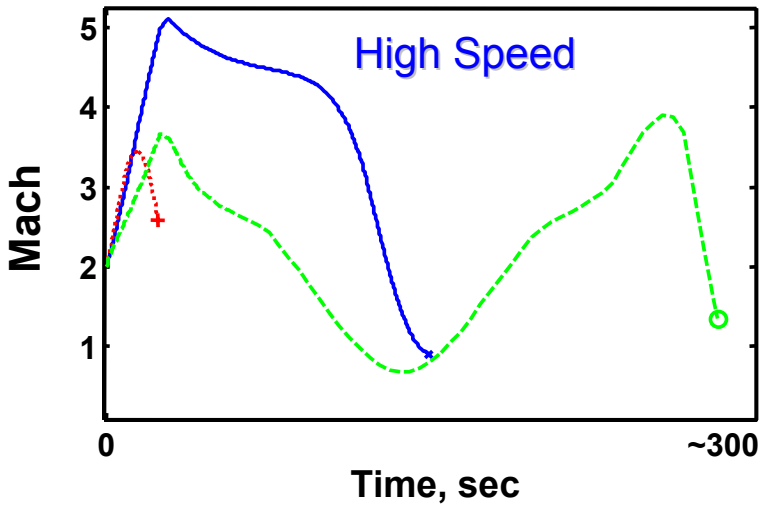

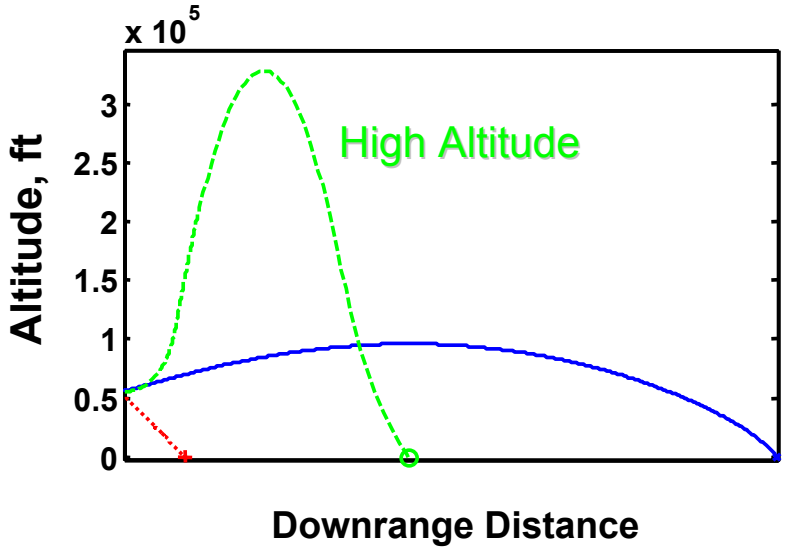

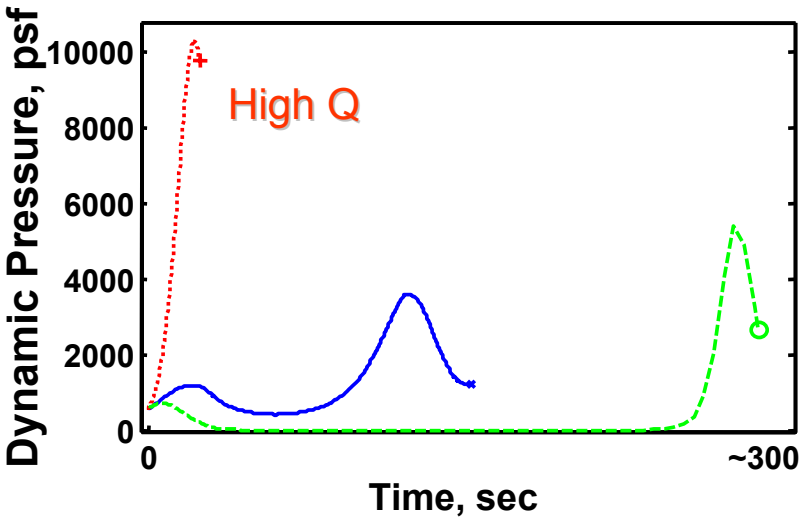

- The missile is capable of reaching useful high-speed test conditions
  - 8 seconds > mach 5.0
  - 50 seconds > mach 4.5
  - Weight reductions improve performance
- High altitude test conditions in excess of 300kft are also kinetically possible
  - Controllability of the store will limit this to <150kft without additional control mechanisms
- High dynamic pressure test conditions are also kinetically possible
  - Structural and actuator authority limitations will reduce capability from kinetic theory

Questions?