LIB INTERFACE DEFINITION DOCUMENT

For the

EMU LITHIUM ION BATTERY SYSTEM

Date: ***July 25 2005***
Contract Number: NNJ04HA05C
DRL/DRD 5

LIB Interface Definition Document for the *EMU Lithium Ion Battery System*

Prepared by:

_____

Date

Approved by:

_____

James K. Jacobs *Date*
Project Manager

_____

James K. Jacobs *Date*
Chief Technology Officer

Change Record

Rev.	Date	Originator	Description
A	6 Dec 03	Electrovaya	Preliminary for PDR
B	11 Dec 03	Electrovaya	Maximum charge current changed
C	10 Sept 04	Electrovaya	CDR Presentation
D	10 Dec 04	Electrovaya	Electrical circuit modified, Trip current modified
E	31 Jan 05	Electrovaya	Title changed from ICD to IDD, presentation of dimensions modified, some dimensions and tolerances changed
F	25 July 2005		Update 3.2 weight from 6805 gm to 7.031 Kg to line up with EISJSC 29928 rev C

Table of Contents

1. INTRODUCTION 1

1.1 PURPOSE AND SCOPE 1
1.2 RESPONSIBILITY AND CHANGE AUTHORITY 1

2. APPLICABLE AND REFERENCE DOCUMENTS 1

2.1 APPLICABLE DOCUMENTS 1
2.2 REFERENCE DOCUMENTS 2
2.3 ORDER OF PRECEDENCE 2

3. MECHANICAL INTERFACES 2

3.1 GENERAL AND DIMENSIONAL 2
3.2 WEIGHT 6
3.3 RELIABILITY 6
3.4 REPLACEABILITY 6

4. ELECTRICAL INTERFACES 6

4.1 GENERAL 6
4.2 ELECTRICAL POWER CHARACTERISTICS 6
4.3 CONTINUITY 9
4.4 INSULATION RESISTANCE 11
4.5 GROUNDING AND BONDING 11
4.6 ELECTROMAGNETIC COMPATIBILITY 11

5. THERMAL INTERFACES 11

5.1 GENERAL 11
5.2 HEAT RELEASE 11
5.3 OPERATING TEMPERATURE RANGE 11

6. ENVIRONMENT 12

6.1 GENERAL 12
6.2 MAGNETIC FIELD SUSCEPTABILITY 12
6.3 OPERATIONAL ENVIRONMENT 12

7. ABBREVIATIONS AND ACRONYMS 13

1. INTRODUCTION

1.1 Purpose and Scope

This document defines the functional interface engineering characteristics of the Lithium Ion Battery for use in the Extravehicular Mobility Unit (EMU) Primary Life Support Subsystem (PLSS). The purpose of this document is to establish and maintain compatibility between the LIB and its co-functioning items. These items include the PLSS, the LIB Charger and the Air Lock Power Supply Charger.

1.2 Responsibility and Change Authority

This document is prepared and maintained in accordance with Electrovaya's Configuration Management Plan. The responsibility for the development of this document lies with the Electrovaya Engineering group. Change authority is Electrovaya with NASA concurrence.

2. APPLICABLE AND REFERENCE DOCUMENTS

2.1 Applicable Documents

The following documents, of the exact issue and revision shown, form a part of this ICD to the extent specified herein.

Document Number	Revision/ Release Date	Document Title
JSC-29927	D	Lithium-ion Battery (LIB) Charger, GFE End Item Specification
JSC-29928	C	Lithium-ion Battery (LIB), GFE End Item Specification
200EC403	07/23/03	Electrovaya Configuration Management Plan
100EQ098	07/23/03	Electrovaya Quality Manual
NSTS 5300.4 (1D-2)		Safety, Reliability, Maintainability and Quality Provisions for the Space Shuttle Program
SSP 41173B		Space Station Quality Assurance Requirements
SSP 30233F		Space Station Requirements for Materials and Processes
JSC 27301D		Materials Control Plan for Johnson Space Center (JSC) Flight Hardware
ICD-4-0012-0C-1	B	EMU Battery Interface Control Document

2.2 Reference Documents

The following documents are reference documents utilized in the development of this IDD. These documents do not form a part of this plan and are not controlled by their reference herein.

Document Number	Revision/ Release Date	Document Title
EV307702	most recent	LIB Drawings

2.3 Order of Precedence

In the event of a conflict between the text of this document and an applicable document cited herein, the text of this document takes precedence. All specifications, standards, exhibits, drawings or other documents that are invoked as "applicable" in this specification are incorporated as cited. All documents that are referred to by an applicable document are considered to be for guidance and information only.

3. MECHANICAL INTERFACES

3.1 General and Dimensional

The mechanical mounting interface between the LIB and the PLSS is via a three-pin mount. After the LIB is lowered onto the two hinge pins it is swung into place and secured with a latch. In the process, a blind, mating, electrical connection is secured. (See Figure 1.) The LIB is secured to one side of the LIB Charger via a cloth strap. Overall dimensions of the LIB are in accordance with the drawing in Figure 2; minor dimensions and tolerances are omitted for clarity. For further dimensional information, refer to the LIB drawing set, document EV307702B (or as revised).

Figure 1

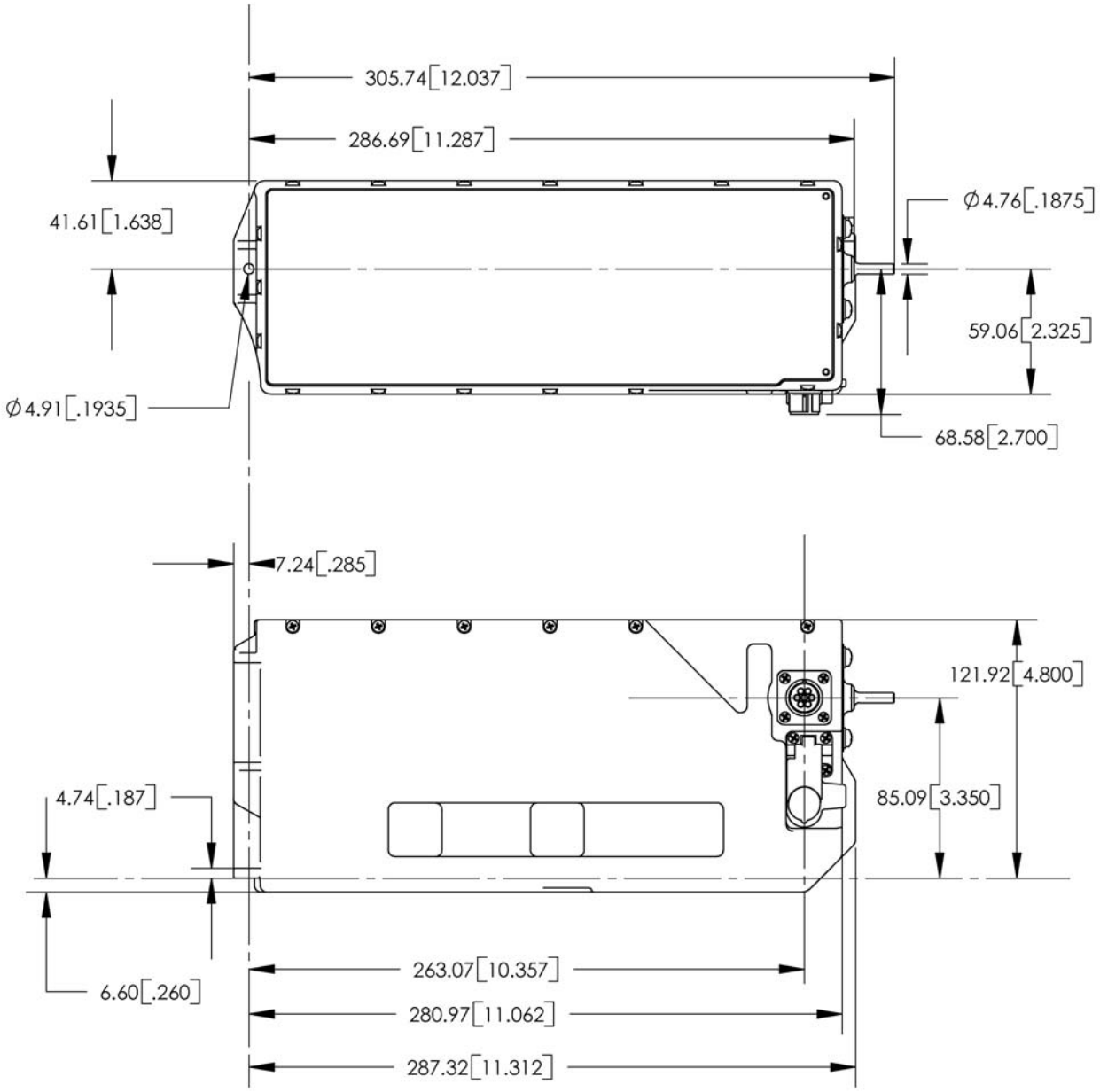

Figure 2 (Dimensions in mm [in])

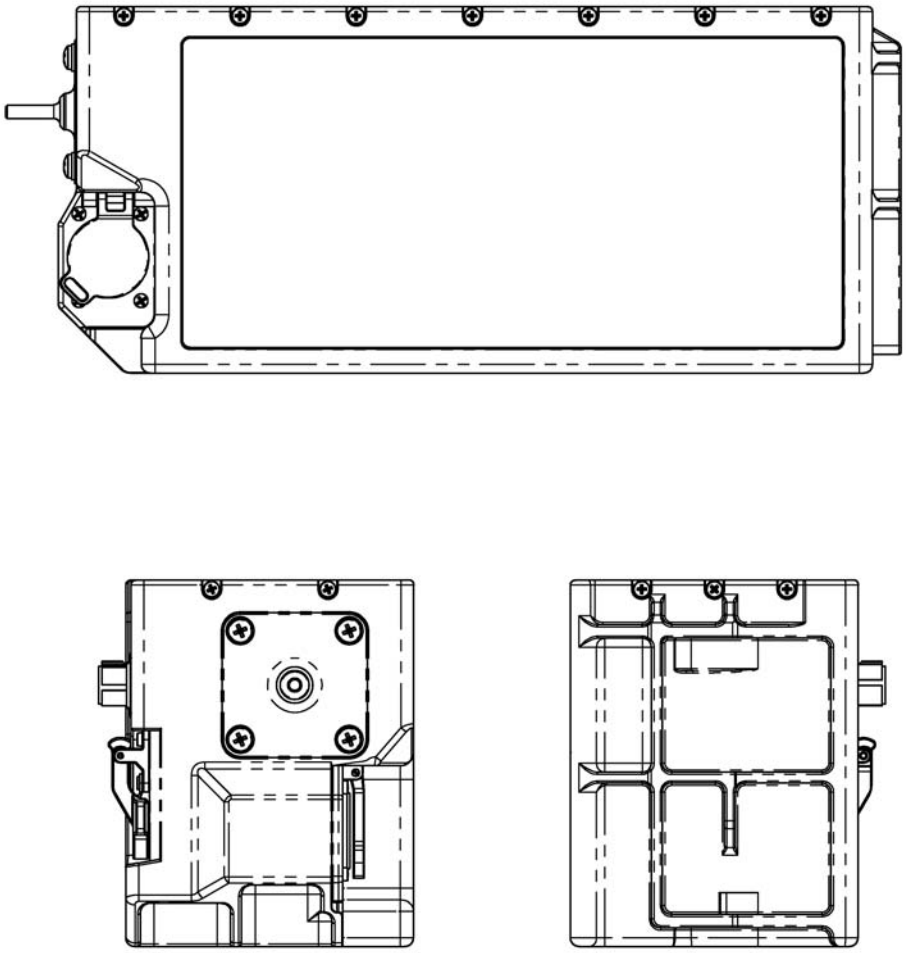

Figure 3

3.2 Weight

The weight of the LIB is 7.031 Kg (15.5 pounds). Its center of gravity is near the geometric center: on the longitudinal centerline of the box; 53 mm (2.1 in) from the base of the lower hinge; 139 mm (5.5 in) from the hinge axis.

3.3 Reliability

The goal of the LIB is to be two-failure tolerant to catastrophic failures and single-failure tolerant to critical failures. However, due to its simplicity of design and to the simplicity of the design of the PLSS interface, there are two deviations from this goal, as listed in the Critical Items List for the LIB.

3.4 Replaceability

The LIB is to be capable of being replaced in the PLSS within 5 minutes by one crewmember, without tools.

4. ELECTRICAL INTERFACES

4.1 General

The LIB has electrical interfaces with three devices: The PLSS, its primary load; The LIB Charger, its primary charging means and secondary (test) load; The Air Lock Power Supply (ALPS), its contingency charging means. The electrical interface to the PLSS is through the seven-pin mating connector MS3424E7-50S. Connection to the PLSS is made indirectly, through the EMU. The electrical interface to the LIB Charger is through a second ten-pin connector EGG4B310CYP. The location of these connectors is shown in Figures 2 and 3, above.

4.2 Electrical Power Characteristics

The LIB operates in three Modes: Charge, Use in the EMU, and test in the LIB Charger. The test conditions are set to simulate normal use conditions. The LIB accepts charge at a constant-current rate of up to 6.5 amperes with a constant-voltage taper charge to a maximum of 4.1 volts per cell (maximum of any of five series-connected cells). This is a nominal maximum voltage of 20.5 volts in the case where all five cells are at the same voltage. The LIB delivers charge to the PLSS, under normal operation, at a maximum current of 3.8 amperes at voltages varying from a full-charge voltage of 20.25±0.25 volts to a full-discharge voltage of 16.0 volts. The LIB will deliver turn-on transient current pulses in excess of the average, and up to a nominal 9 amperes for 5 seconds (see current interruption characteristics). The total storage capacity of the LIB, available for delivery to a resistive load on discharge at the above currents and within the above voltage range is not less than 26.6 amp-hours. The LIB provides current limit protection on the negative terminals for currents delivered to, or taken from, the LIB. The protection characteristic depends on the thermal and pressure environment of the LIB enclosure, but is a nominal terrestrial “hold” of 15Amperes and a guaranteed terrestrial trip of 20.25 Amperes (within 1 hour). The circuit is equipped with a redundant fuse holder (F2 in the circuit diagram) into which a back-up fuse may be inserted to cover contingencies where the primary fuse is

"blown". This redundant fuse holder is normally covered by a thin removable (single use) adhesive cover plate. The LIB may be charged within the above charge-voltage envelope by the ALPS charger, but must be charged at least once per annum with the LIB charger for maintaining cell balance. The LIB contains an internal thermistor for temperature measurement. The thermistor characteristic is shown in figure 5. Pin-outs for the first and second connector are as shown in Tables 1 and 2 respectively. The internal circuit is shown in figure 4.

Type:	MS3424E7-50S, 7-pin push-on recept.	
Pin #	**Use**	**Remarks**
1	No connection	
2	Positive terminal	
3	No connection	
6	Positive terminal	
7	Positive terminal	
4	Negative terminal	Current limit protected
5	Negative terminal	Current limit protected
Shell	Chassis Ground	Chassis ground connected to case

Table 1

Type:	EGG.4B.310CYP latching recept.	
Pin #	**Use**	**Remarks**
1	Cell 2+ sense	Current limit protected
2	Cell 3+ sense	Current limit protected
3	Cell 4+ sense	Current limit protected
4	Cell 5+ sense	
5	Chassis ground	Chassis ground connected to case
6	Thermistor	Resistance vs. Sense-
7	Sense –	Current limit protected
8	Cell 1+ sense	Current limit protected
9	Negative Power	Current limit protected
10	Positive Power	
Shell	Chassis Ground	Chassis ground connected to case

Table 2

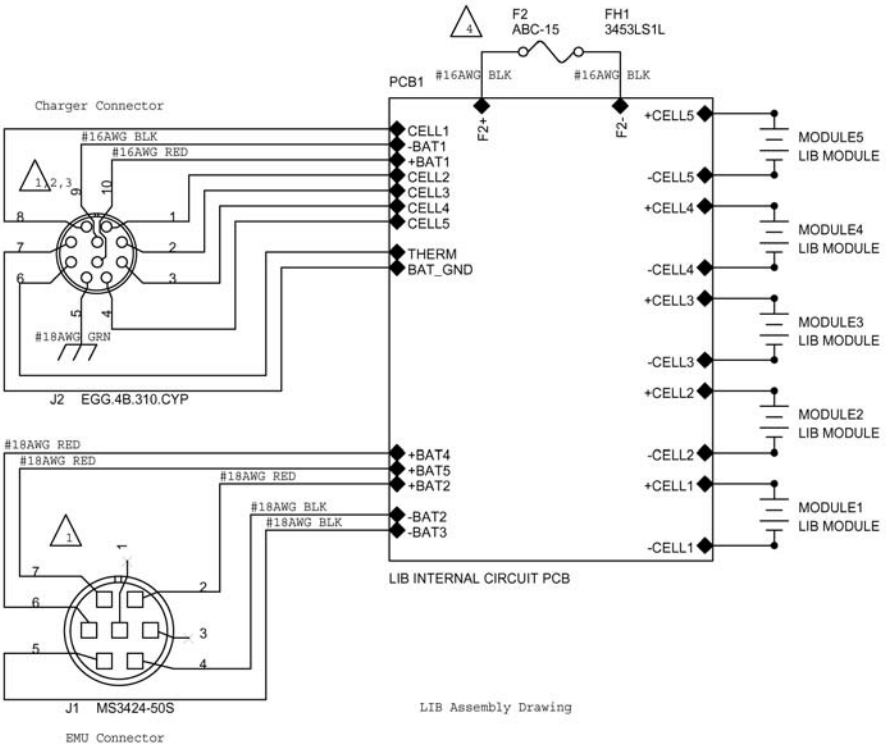
F2
ABC-15
FH1
3453LS1L
PCB1
#16AWG BLK
#16AWG BLK
Charger Connector
#16AWG BLK
#16AWG RED
CELL1
-BAT1
+BAT1
CELL2
CELL3
CELL4
CELL5
THERM
BAT_GND
+CELL5
-CELL5
+CELL4
-CELL4
+CELL3
-CELL3
+CELL2
-CELL2
+CELL1
-CELL1
MODULE5
LIB MODULE
MODULE4
LIB MODULE
MODULE3
LIB MODULE
MODULE2
LIB MODULE
MODULE1
LIB MODULE
#18AWG GRN
J2 EGG.4B.310.CYP
#18AWG RED
#18AWG RED
#18AWG RED
#18AWG BLK
#18AWG BLK
+BAT4
+BAT5
+BAT2
-BAT2
-BAT3
LIB INTERNAL CIRCUIT PCB
J1 MS3424-50S
EMU Connector
LIB Assembly Drawing

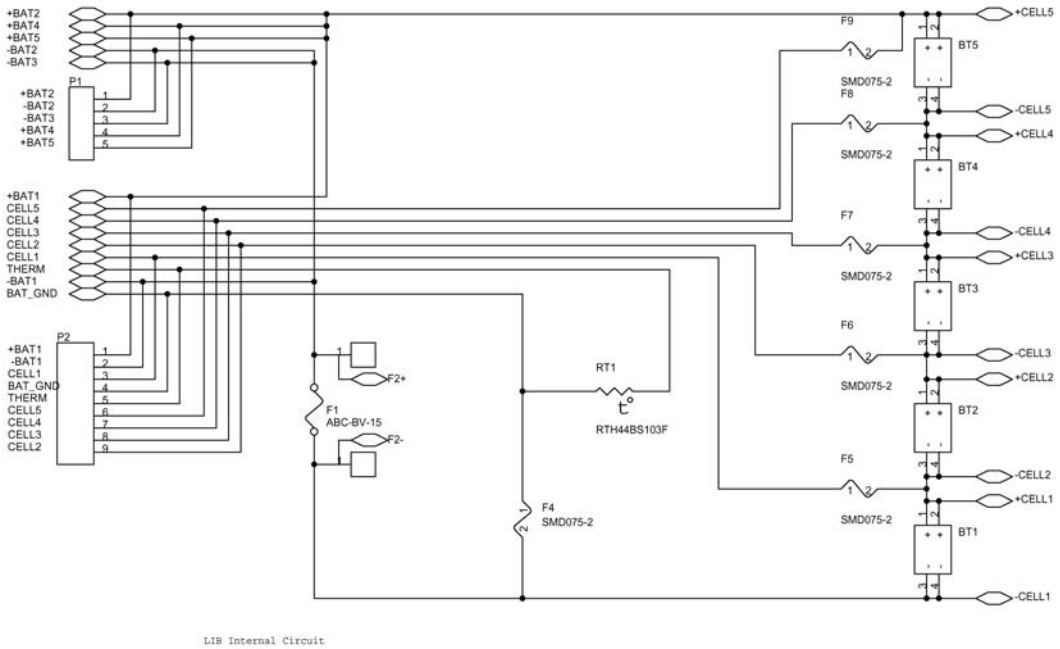
+BAT2
+BAT4
+BAT5
-BAT2
-BAT3
P1
+BAT2
-BAT2
-BAT3
+BAT4
+BAT5
+BAT1
CELL5
CELL4
CELL3
CELL2
CELL1
THERM
-BAT1
BAT_GND
P2
+BAT1
-BAT1
CELL1
BAT_GND
THERM
CELL5
CELL4
CELL3
CELL2
F2+
F1
ABC-BV-15
F2-
RT1
RTH44BS103F
F4
SMD075-2
F9
SMD075-2
F8
SMD075-2
F7
SMD075-2
F6
SMD075-2
F5
SMD075-2
BT5
BT4
BT3
BT2
BT1
+CELL5
-CELL5
+CELL4
-CELL4
+CELL3
-CELL3
+CELL2
-CELL2
+CELL1
-CELL1
LIB Internal Circuit

Figure 4

Temperature (°C)	Resistance (kohms)
-55	1000.00
-15	73.80
0	32.70
25	10.00
50	3.60
75	1.48
100	0.675
125	0.340

Figure 5

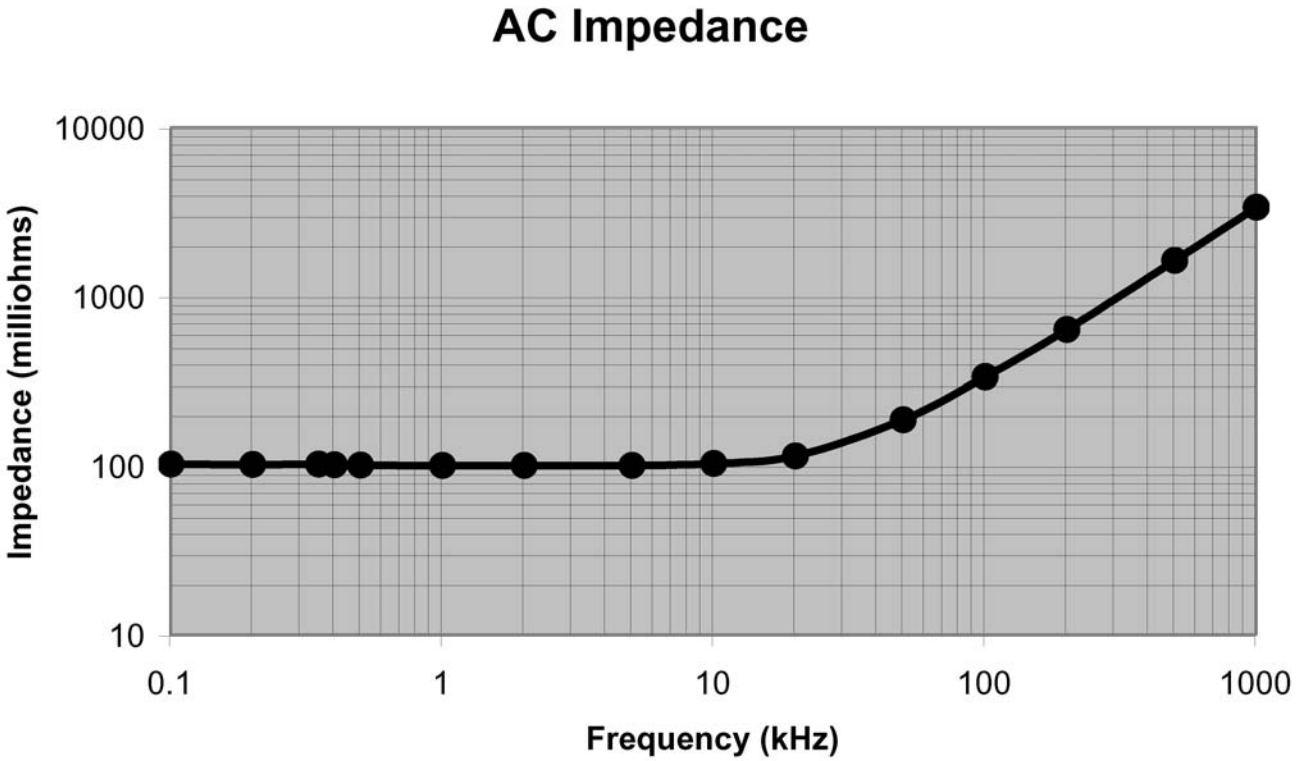
AC Impedance
Impedance (milliohms)
10000
1000
100
10
0.1
1
10
100
1000
Frequency (kHz)

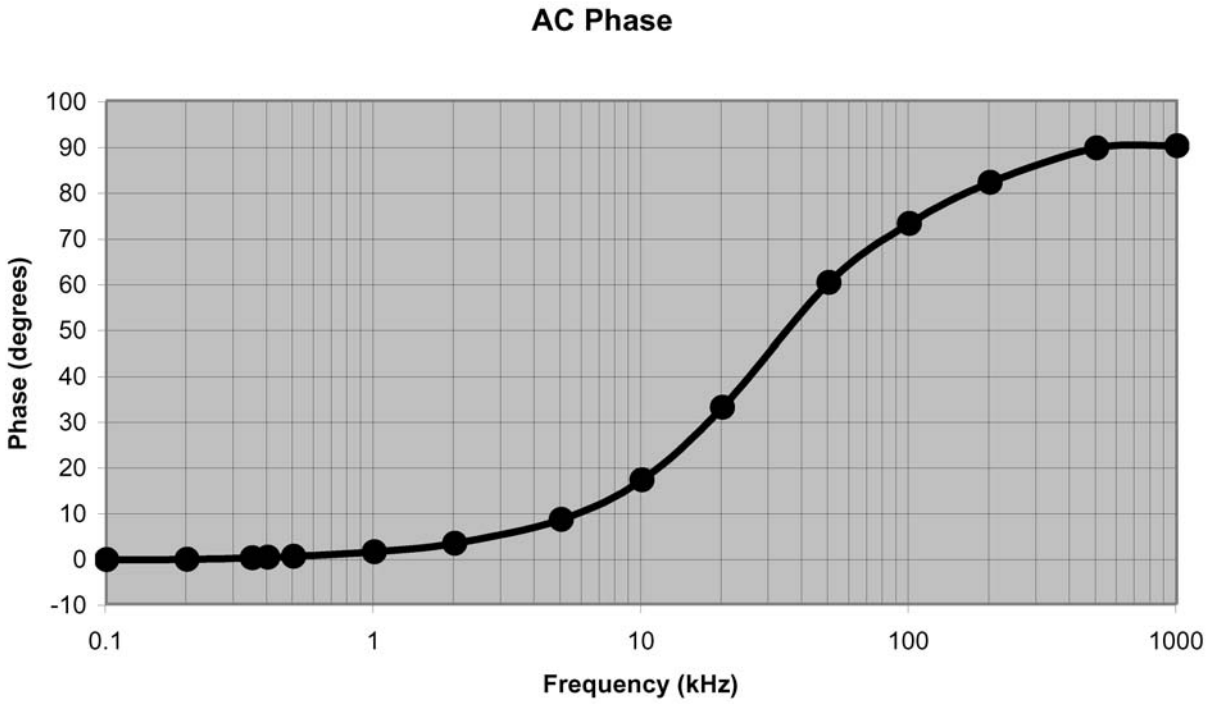
AC Phase
Phase (degrees)
100
90
80
70
60
50
40
30
20
10
0
-10
0.1
1
10
100
1000
Frequency (kHz)

Figure 6

4.3 Continuity

The LIB has a total DC impedance of less than 300mΩ. A typical AC impedance characteristic is shown in figure 6. The impedance is an excellent fit over this frequency range to a resistance of 100 milliohms in series with an inductance of 500 nanohenries.

4.4 Insulation Resistance

The LIB has a design insulation resistance of >5MΩ between the terminals and case. Typical insulation resistance is >20MΩ.

4.5 Grounding and Bonding

No signal is grounded within the LIB. The single-point ground point is in the interfacing component. The maximum bonding resistance between the LIB enclosure box and its cover 15 milliohms. The maximum bonding resistance between the LIB enclosure box and the shell of J1 is likewise 15 milliohms. All other external conductive surfaces are bonded to a maximum resistance of 100 milliohms.

4.6 Electromagnetic Compatibility

The LIB, when operating as part of the EMU, shall satisfy the requirements of JSC-SL-E-0002, Book 3 Volume 1, Dated August 10, 2001.

5. THERMAL INTERFACES

5.1 General

The heat capacity of the LIB is 7260 Joules/K. When current, charge or discharge, is passed through the LIB, heating results in accordance with the continuity characteristic described above. This heating, in addition to the heat added to the LIB or removed from it by contact with the thermal environment, influences the resulting LIB temperature.

5.2 Heat Release

During charge or discharge at 3.8 amperes the total rate of heat generation in the LIB is less than 3 watts.

5.3 Operating Temperature Range

The LIB is designed to remain within its specifications of capacity, impedance and voltage when operating in the temperature range of 10ºC to 43ºC (50ºF to 109°F). It may be charged or discharged between –10ºC and 55ºC (14°F and 131°F), but capacity, impedance, and life expectancy specifications may not be met at all times in this extended range.

6. ENVIRONMENT

6.1 General

The LIB is designed to operate on the ground, in the flight cabin and in the vacuum environment of EVA.

6.2 Magnetic Field Susceptability

The LIB shall operate without degradation or malfunction from nominal performance beyond its operational specification when exposed to static DC magnetic fields and sources with field strength of up to 600 gauss.

6.3 Operational Environment

The LIB is designed to operate within the limits of the environment specified in the LIB End Item Specification (EIS), JSC29928.

7. ABBREVIATIONS AND ACRONYMS

°C	Degrees Celsius
°F	Degrees Fahrenheit
A	Ampere
AC	Alternating Current
ADC	Analog-to-Digital Converter
Ah	Ampere-Hour
ANSI	American National Standard Institute
ALPS	Air Lock Power Supply
ASCII	American Standard Code for Information Interchange
BCA	Battery Charger Assembly
BIOS	Basic Input/Output System
CDR	Critical Design Review
COSMOS	The name of a finite element analysis software
COTS	Commercial off-the-Shelf
CR	Change Request
CSC	Computer Software Component
CSCI	Computer Software Configuration Item
DAC	Digital-to-Analog Converter
DC	Direct Current
DR	Discrepancy Report
EEE	Electrical, Electronic and Electromechanical
EEPROM	Electrically Erasable Programmable Read-Only Memory
EIS	End Item Specification
EMI	Electromagnetic Interference
EMU	Extravehicular Mobility Unit
EVA	Extravehicular Activity
FCE	Flight Certified Equipment
FET	Field Effect Transistor

GCAR	Safety and Mission Assurance Certification Approval Request
GFE	Government Furnished Equipment
gm	Gram
ICD	Interface Control Document
in	Inch
I2C	Inter-Integrated Circuit (a communications protocol)
ICE	In-Circuit-Emulation
ICP	In-Circuit-Programming
ISO	International Organization for Standardization
ISS	International Space Station
ITMG	Meteorite protection garment
J	Joule
JSC	Johnson Space Center
K	Kelvin
kg	Kilogram
KSC	Kennedy Space Center
L	Liter
LED	Light Emitting Diode
LIB	Lithium Ion Battery
LSB	Least Significant Bit
m^2	Meters squared
mΩ	Milliohm
MIL-STD	Military Standard
min	Minute
mm	Millimeter
ms	Millisecond
MSFC	Marshall Space Flight Center
MUA	Material Usage Agreement
NASA	National Aeronautics and Space Administration
OCV	Open Circuit Voltage
OS	Operating System
PC	Personal Computer

PCB	Printed Circuit Board ?
PDR	Preliminary Design Review
PIC14000	Microchip Technology Inc.'s Programmable Interrupt Controller
POR	Power-on Reset (of a microchip)
PLSS	Primary Life Support Subsystem
PRACA	Problem Reporting and Corrective Action
PVG	Pack Voltage Good (logic signal)
QMS	Quality Management System
RAM	Random Access Memory
RDMS	Risk Data Management System
S&MA	Safety and Mission Assurance
SDP	Software Development Plan
sec	second
SEE	Single Event Effects
SR&QA	Safety, Reliability, and Quality Assurance
SRS	Software Requirement Specification
SS	Space Shuttle
SSP	Space Station Program
TBD	To Be Determined
USB	Universal Serial Bus
V	Volt
VC	Visibly Clean
VDC	Direct Current Voltage
W	Watt
WDT	Watchdog Timer