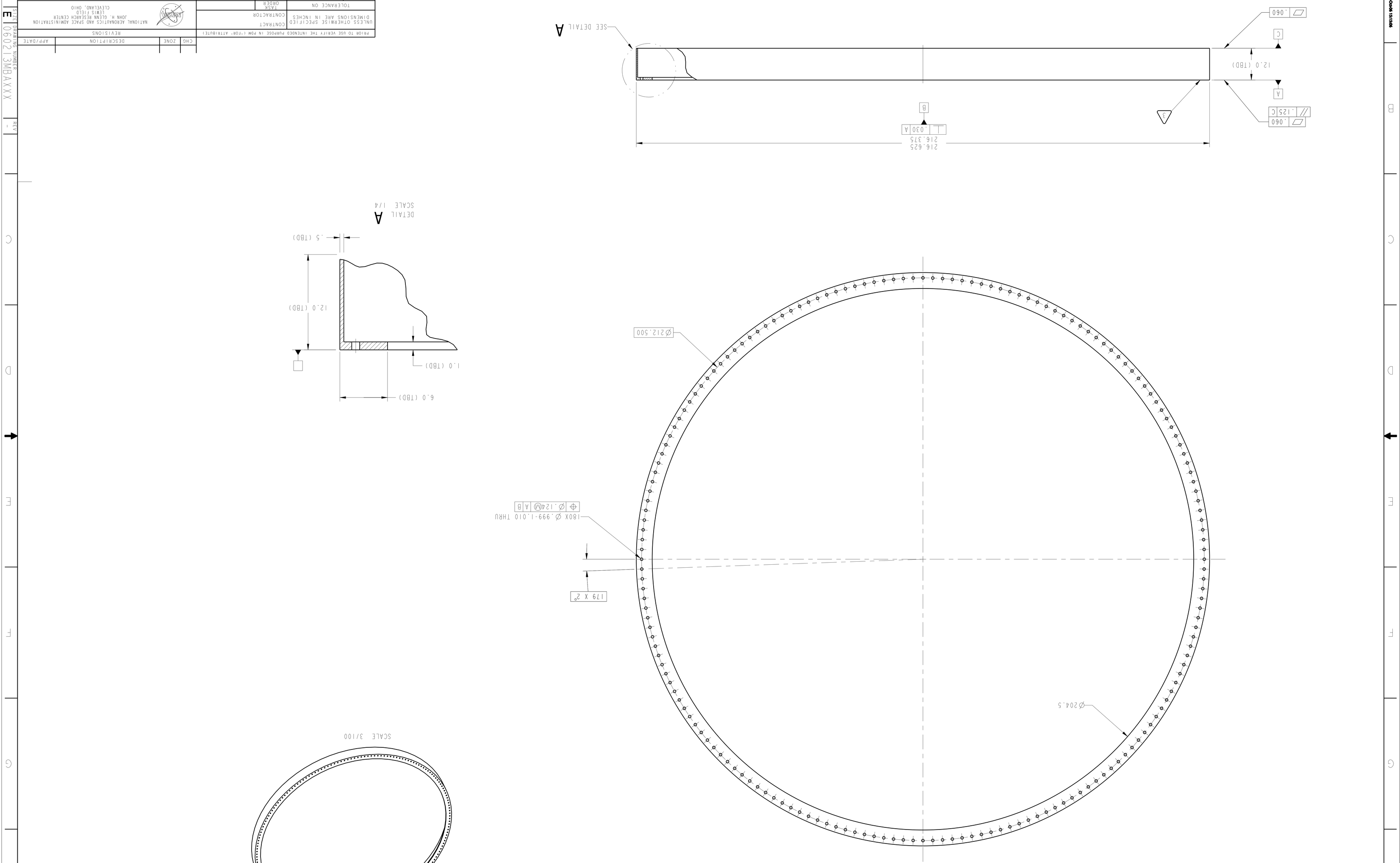

1. MATERIAL: TBD
2. 125 Ra ALL MACHINED SURFACES.
3. ENGRAVE DRAWING PART NUMBER 06021 3MBAXXX USING A 1/4 INCH HIGH CHARACTER, ON SPECIFIED SURFACE, PER SAE-AS478, METHOD 3. (ZONE B8)

PRIOR TO USE VERIFY THE INTENDED PURPOSE IN PDM ("FOR" ATTRIBUTE)			
CONTRACT			
CONTRACTOR			
ULESS OTHERWISE SPECIFIED DIMENSIONS ARE IN INCHES			
TOLERANCE ON			
		TASK ORDER	
.X	± 0.03	DRAFTER	DEZ / L. SPINELLI
.XX	± 0.02	ENGINEER	DES / T. VANNUYEN
.XXX	± 0.005	DESIGNER	DEZ / L. SPINELLI
ANGULAR	± 0.50°		
FRACTION	± -		
BREAK EDGES	.02-.03		

PDM REL LEVEL:
PDM REVISION:
PDM DATABASE:
MODEL NAME: UPPER_FLANGE_BING
CHECK FOR ANY QUESTIONS ECO'S PRIOR TO USE

DIMENSIONING AND TOLERANCING PER ASME Y14.5M-1994

AXXX FLANGE RING

SIZE E	DRAWING NUMBER 06021 3MBAXXX	REV -	BLDG 50 / HI BAY
SCALE: 2/25 AND NOTED	INITIAL REL DATE XX/XX/XXXX	SHEET 1 OF 1	DISCIPLINE MECHANICAL

NATIONAL AERONAUTICS AND SPACE ADMINISTRATION
JOHN H. GLENN RESEARCH CENTER
LEWIS FIELD
CLEVELAND, OHIO

ARES I-1 SEVERANCE SYSTEM

06021 3MBAXXX A

CHG	ZONE	DESCRIPTION	APP/DATE
REVISIONS			

SIZE E DRAWING NUMBER 06021 3MBAXXX REV -

PRO/E VERSION: Wildfire 2.0

NAMESPACE: OBJECTURE_FLANGE_BING DATE&CODE: 1/6/1/06