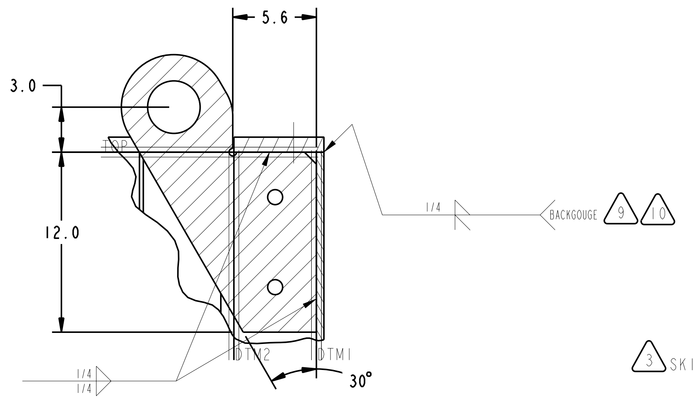

DETAIL E
SCALE 1/5
LIFTING LUG 3/4 PLATE
3 REQ'D EQUALLY SPACED
AT 90°, 210° AND 330°

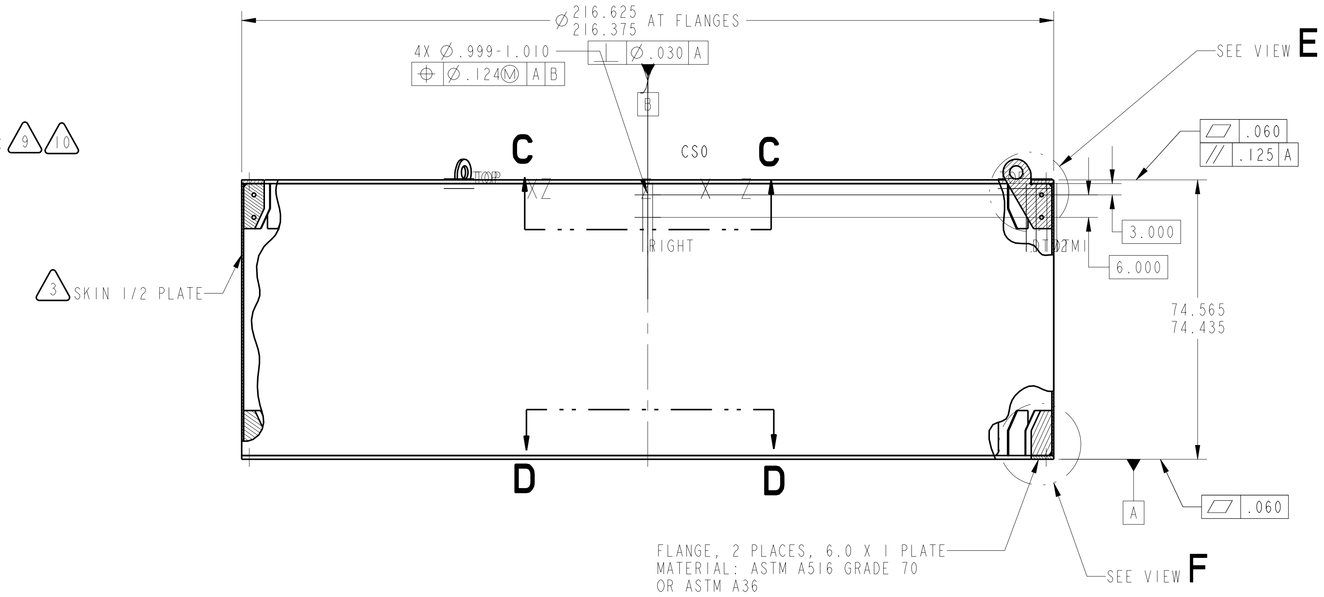

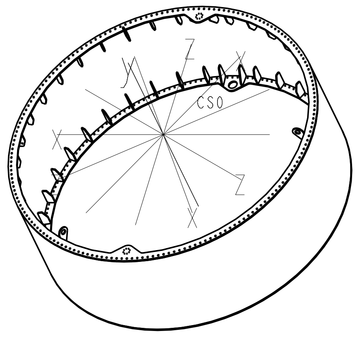

SCALE 1/50

1. MATERIAL: ASTM A36 STEEL EXCEPT AS NOTED CERTIFICATE OF CONFORMANCE REQUIRED.
2. TOLERANCES ARE BEST EFFORT, ACTUAL DIMENSIONS TO BE VERIFIED BY INSPECTION AND DOCUMENTED.
3. SKIN SHALL CONSIST OF WELDED PANELS STITCHED WITH ONE HORIZONTAL SEAM AND MULTIPLE STAGGERED VERTICAL SEAMS NUMBER OF PANELS TO BE DETERMINED BY FABRICATION LEAD.
4. ALL WELDED JOINTS SHALL BE CLASS A WELDS AS DEFINED IN THE GRC WELDING MANUAL (GLM-QE 8730.2).
5. ALL WELDING SHALL BE PERFORMED IN ACCORDANCE WITH A PRE-QUALIFIED WELDING PROCEDURE IN ACCORDANCE WITH AWS D1.1 PER THE GRC WELDING MANUAL (GLM-QE 8730.2).
6. ALL WELDS SHALL BE PERFORMED USING E71T-1M ELECTRODE IN ACCORDANCE WITH AWS A5.20 (ENTITLED: SPECIFICATION FOR CARBON STEEL ELECTRODES FOR FLUX CORED ARC WELDING).
7. WELD SYMBOLS PER AWS A2.4 AS SHOWN IN GRC EDD DRAFTING STANDARDS AND GUIDELINES.
8. WELD ACCEPTANCE CRITERIA TO BE DEVELOPED DURING PATHFINDER 1 FOR RT, UT, PT, MT AND VISUAL INSPECTION METHODS.
9. A RECORD OF THE WELD POROSITY SHOWING INCLUSION LENGTH AND SIZES FOR THE CYLINDER SKIN TO FLANGE WELDS SHALL BE DOCUMENTED FOR AN EVALUATION OF THE WELDING PROCESS (REF. AWS D1.1/D1.1M, 2006, FIGURE 6.2, PAGE 238).
10. JOINT DESIGNATION TC-U4b-GF PER AWS D1.1
11. JOINT DESIGNATION B-U2-GF PER AWS D1.1.

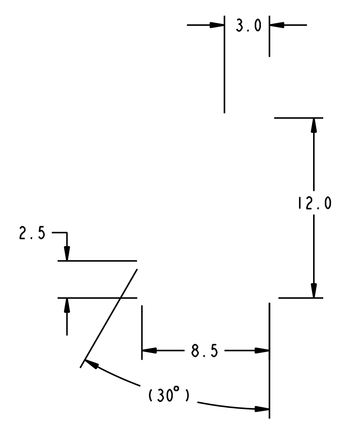

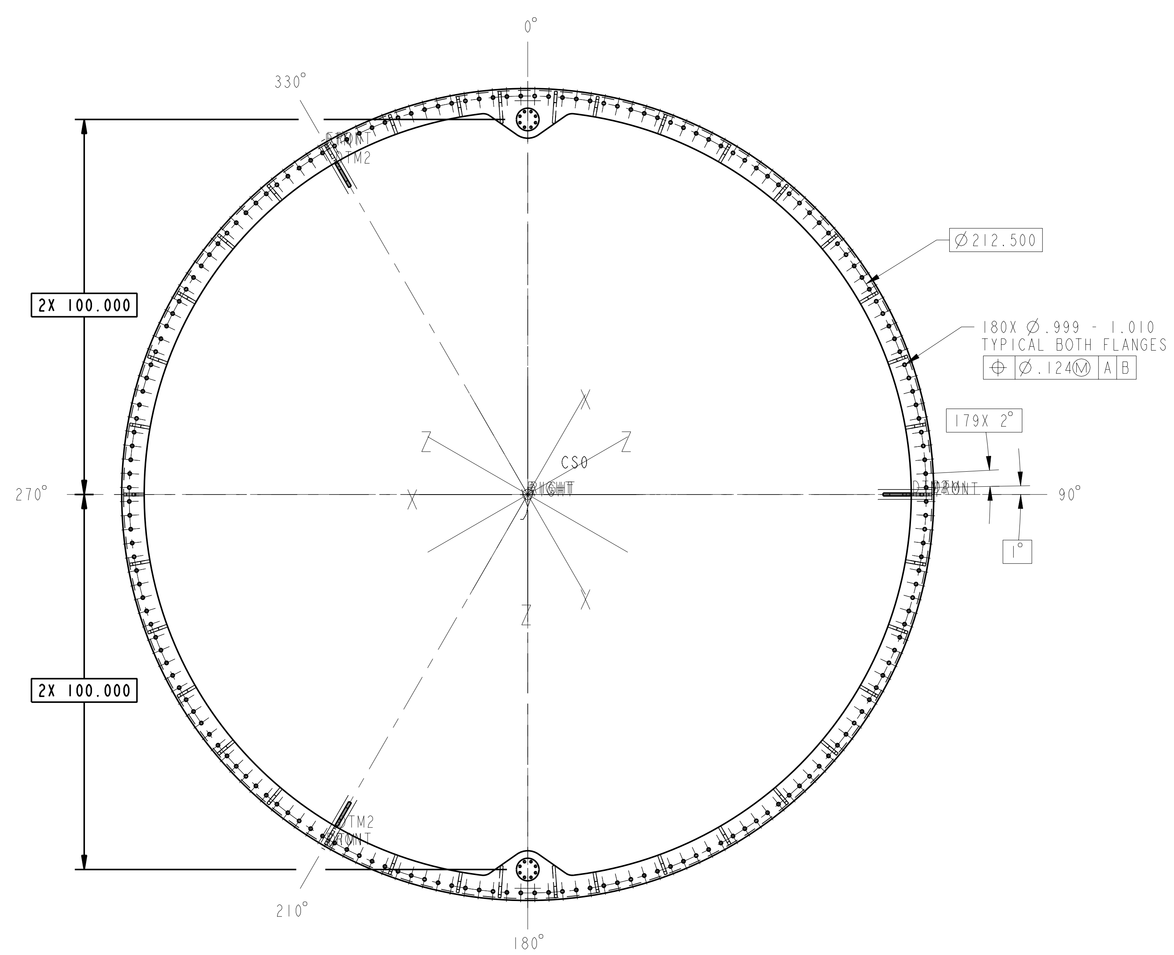

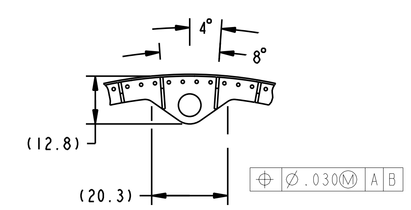

SECTION D-D
2 PLACES AT 0° AND 180°

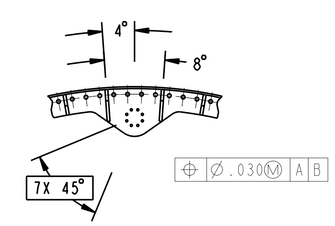

SECTION C-C
2 PLACES AT 0° AND 180°

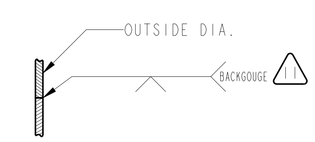

SKIN PLATE
1/5 SCALE 3

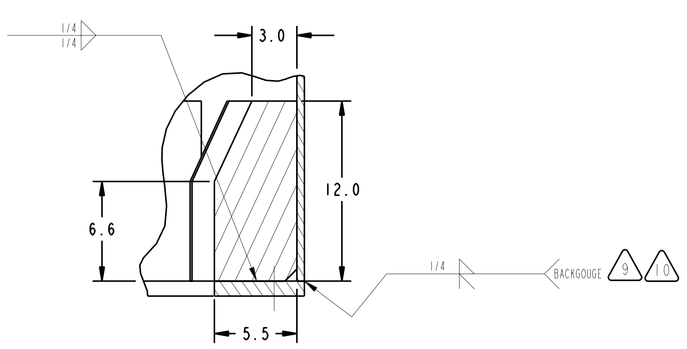

DETAIL F
SCALE 1/5
STANDARD GUSSET 1/2 PLATE, 10° SPACING
OMIT AT 0°, 90°, 180°, 210 °AND 330°
(31 REQ'D PER FLANGE) TOTAL OF 62

CHG	ZONE	DESCRIPTION	APP/DATE

REVISIONS

PRIOR TO USE VERIFY THE INTENDED PURPOSE IN PDM ("FOR" ATTRIBUTE)

UNLESS OTHERWISE SPECIFIED DIMENSIONS ARE IN INCHES

TOLERANCE ON	
.X	± 0.03
.XX	± 0.02
.XXX	± 0.005
FRACTION	± .06
ANGULAR	± 0.50°
BREAK EDGES	.02-.03

CONTRACT
CONTRACTOR
TASK ORDER

DRAFTER	DEZ/C. BLASER
ENGINEER	DES/J. HUNTER
DESIGNER	DEZ/C. BLASER

DIMENSIONING AND TOLERANCING PER ASME Y14.5M-1994

NATIONAL AERONAUTICS AND SPACE ADMINISTRATION
JOHN H. GLENN RESEARCH CENTER
LEWIS FIELD
CLEVELAND, OHIO

PATHFINDER SEGMENT 1

060213MBA200

A210 SEGMENT 1 (WELDMENT)

PDM REL LEVEL: RELEASE PDM REVISION: x.16+
PDM DATABASE: 060213_ADFT-1_Upper_Stage_Sim
MODEL NAME: 060213MBA210
CHECK FOR ANY OUTSTANDING ECO'S PRIOR TO USE

SIZE	DRAWING NUMBER	REV	BLDG	AREA
E	060213MBA210	-	50	HI BAY

UNITS: INCH

SCALE:	INITIAL REL DATE	SHEET	DISCIPLINE
1/20	08/18/2006	1 OF 1	MECHANICAL

PRO/E VERSION: Wildfire 2.0

SIZE E DRAWING NUMBER 060213MBA210 REV -

A

NAME:BRLACE OBJECT:060213MBA210 DATE:29-Sep-06 13:26:27