Purchase Request
14 x 22 Ft. Facility Acoustic Materials

Item # 1. Test Section Floor Wedges:

Line Item 01

a. Wedges " A "
Open polytherurethane acoustic foam wedges with fire retardant and anti-static properties.
Standard Acoustic Wedge Porosity
Dimensions: 7 inch x 7 inch square base, 21 inch height, 6 inch straight base portion
Color: Black/Charcoal
Sketches are attached:

Quantity: 3020 each

b. Wedges " B "

Line Item 02

Open polytherurethane acoustic foam wedges with fire retardant anti-static properties.
Reticulated (Highly Porous) Polyurethane Foam (Wind Screen / Speaker Cover Material)
Dimensions: 7 inch x 7 inch square base, 16 1/2 inch height, 1 ½ straight base inch thick
Color: Black / Charcoal
Sketches are attached:

Quantity: 3020 each

c. Reticulated Filter foam sheets

Line Item 03

Reticulated (Highly Porous) Polyurethane Foam (Wind Screen / Speaker Cover Material) with fire retardant.
Dimensions: 72 inches x 48 inches X 1.25 inch thick
Color: Black / Charcoal

Quantity: 70 each

Sketches Item 1

14 X 22 Ft Subsonic Wind Tunnel – Facility Acoustic Materials

Item # 1. Test Section Floor Wedges:

Drawing Item 01

a. Wedges " A "

Dimensions: 7 inch x 7 inch square base, 21 inch height, 6 inch straight base

Material: **Standard Porosity Acoustic Polyurethane Foam**

Quantity: 3020 each

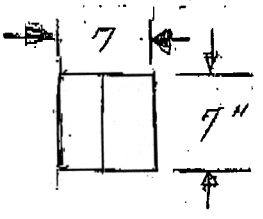

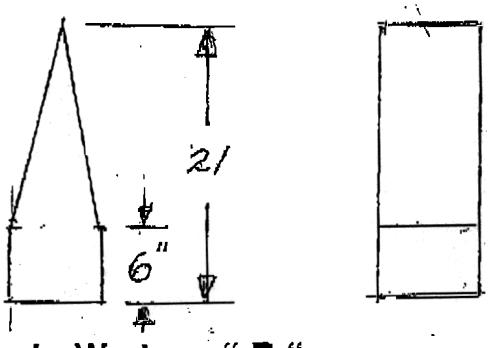

Drawing Item 02

b. Wedges " B "

Dimensions: 7 inch x 7 inch square base, 16 1/2 inch height, 1 ½ inch straight base

Material: **Reticulated (Highly Porous) Polyurethane Foam (Wind Screen / Speaker Cover)**

Quantity: 3020 each

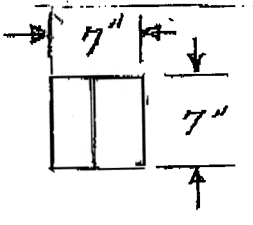

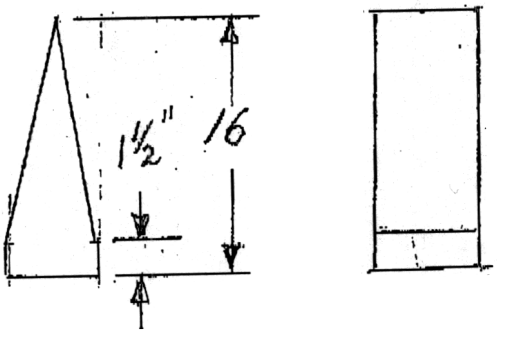

14 X 22 Ft Subsonic Wind Tunnel – Facility Acoustic Materials

Item # 2. Extended Floor Surfaces - Acoustic Material

Line Item 04

a. Floor Sheets
Dimensions: 48 inch x 96 inch square base, 4 inch height
Material: **Standard Porosity Acoustic Polyurethane Foam**
Open polytherurethane acoustic foam wedges with Class A fire retardant and anti-static properties.

Color: Black / Charcoal
Quantity: 80 each

Floor Area Calculation: 14 x 22 Ft Test Section Area – Open configuration

Total floor area = 52 ft x 64 ft = 3328 ft^2 – carts area (40 ft x 21ft = 840 ft^2)
= 3328 – 840 = 2488 ft

Thus 2500 ft^2 / 32 ft^2 per sheet = 78 sheets

Order 80 each.

14 X 22 Ft Subsonic Wind Tunnel – Facility Acoustic Materials

Line Item 05

Item # 3. Acoustic Wedges on Tunnel Test Section Walls

a. Wall Wedges
Dimensions: 12 inch x 12 inch square base, 6 inch height, 1 inch straight base , 3 Wedges per unit
Material: **Standard Porosity Acoustic Polyurethane Foam**
Open polytherurethane acoustic foam wedges with Class A fire retardant and anti-static properties.
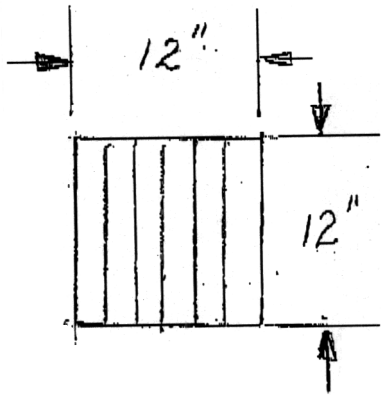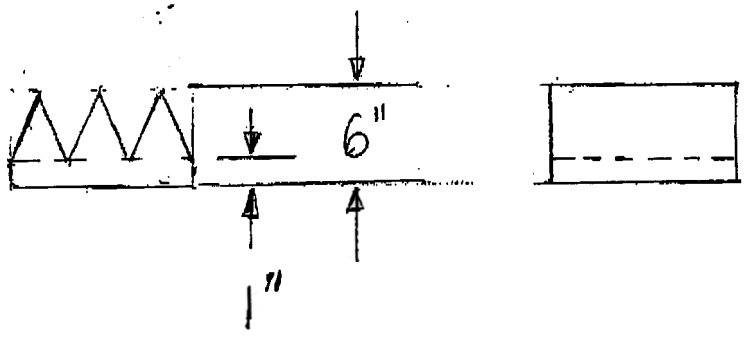
Color: White
Quantity: 968 each