NASA GLENN RESEARCH CENTER
UPGRADE ELECTRIC PROPULSION 2-16-06
RESEARCH BUILDING 16
FY05 - Phase 2

(Solicitation No. NNC06ZDF018E)

A. CONTRACTOR QUESTIONS AND ANSWERS (Electrical clarification only)

The following question No 26 that was submitted by contractors regarding the scope of work for the Building 16, Phase II renovation project, is being re-issued for further clarification. See **bold note** under "Permanent Tie Circuit"

QUESTION NO. 26
The drawings due not indicate the option 4 work, it is shown on the drawings both demo and install with notes that make it seem that all of the work is base bid. Please clarify if the option 4 as stated in the specification is all inclusive of the work that shown on the drawings associated with the transformers.

ANWSER:
This includes parts and labor associated with the removal of existing and installation of new transformers C1E1A and C1E1B and there associated primary disconnect switches and cabling. Also included in this option is the removal and installation of a new concrete pad for transformer C1E1B and a new duct bank from the new concrete pad to man-hole 47. Listed below is a list of the major items associated with this task:

Replacement of Transformer C1E1A includes the following items:

- removal and disposal of oil in load break switch and transformer (approximately 221 gallons)
- disconnect and pull feeder cable back into the transformer vault
- disconnect and pull secondary conductors and conduit into transformer vault
- disconnect and remove primary disconnect switch and transformer
- plug existing conduit holes and core drill new holes for new transformer and primary disconnect switch
- rework existing stainless steel junction box located on east end of existing transformer due to interference of new transformer
- install new transformer, primary disconnect switch and associated conduit
- reconnect existing feeder cable and secondary conductors
- testing

Replacement of Transformer C1E1B includes the following items:

- removal and disposal of oil in load break switch and transformer (approximately 172 gallons)
- disconnect and remove feeder cable back to manhole 47
- disconnect secondary conductors
- disconnect and remove primary disconnect switch and transformer
- remove existing transformer concrete pad and install new pad as described on electrical drawings
- install duct bank from new transformer pad to manhole 47
- install new transformer, primary disconnect switch and associated conduit
- install new primary cable from manhole 47 to transformer, splice into existing primary feeder cable in manhole 47
- testing

Permanent Tie Circuit

- Prior to replacing transformer C1E1A the contractor shall install a new 480/277 volt, 1200amp switchboard in Room 180 to provide tie capabilities from draw-out switchgear F03 (located in room 180) to panel F01 (located in Room 118) during the transformer replacement. Included in this task is installing parallel 3" rigid metal conduits (RMC) and branch circuit conductors from the newly installed switchboard to panel F01. Refer to attached partial drawings 6 and 7 of 7, dated February 13, 2006.
- **Also, refer to attached partial drawings 1 of 2 and 2 of 2, dated February 16, 2006 for further clarification.**

Note:
During the construction phase electrical, services to Buildings 16 and 74 are to remain energized during normal working hours. The 2400volt feed to Building 74 is located inside manhole 46 and will require an outage during the work within the manhole, because of its proximity to the construction efforts associated with Transformer C1E1A. All work within manhole 46 shall be performed on weekends.

The contractor is responsible for the safety of their personnel. The contractor shall provide a qualified high voltage electrician as safety person while work is being accomplished in substations and high voltage manholes.

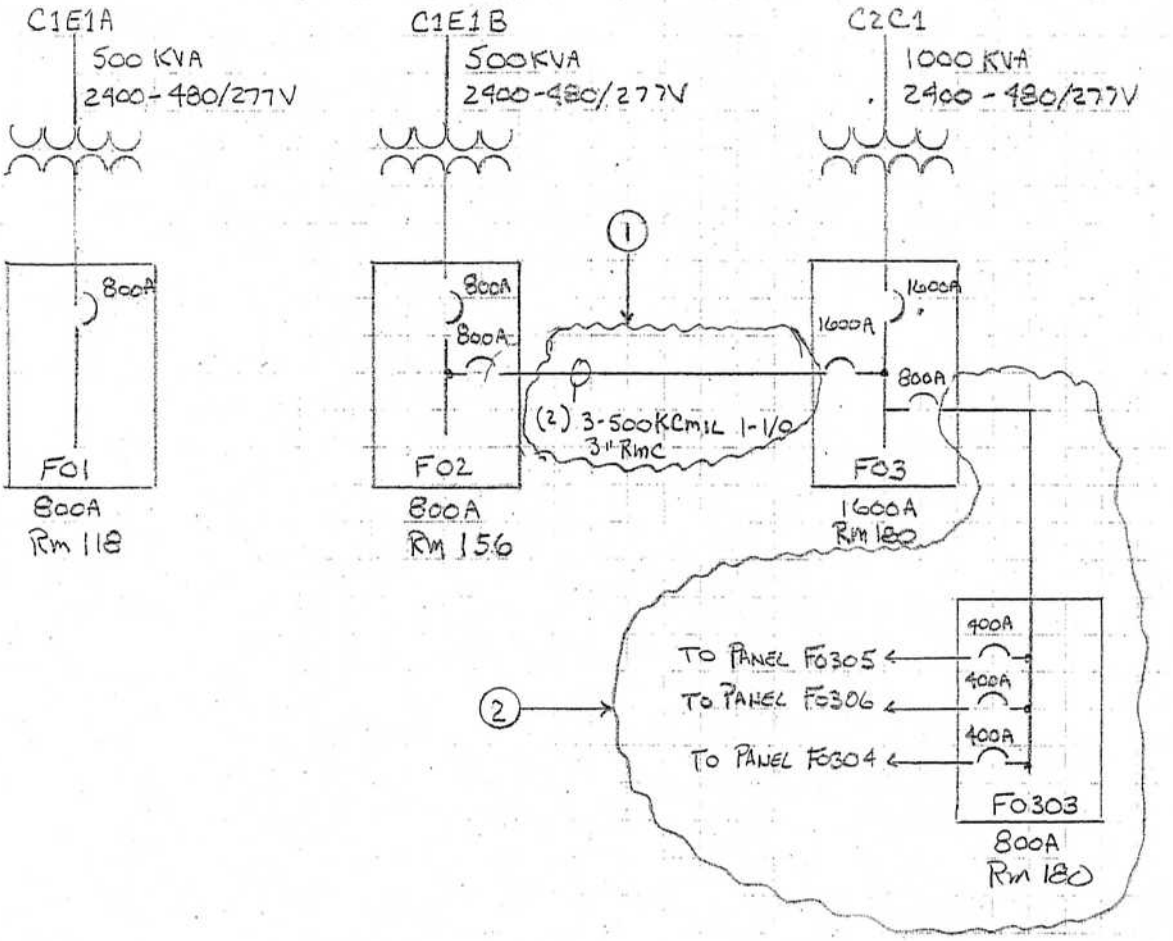

Note 1 - Disconnect conduit and wiring from 1600A circuit breaker in room 180.

Note 2 – Disconnect and remove panel F0303 (return to Government). Remove feeders and conduit to F03.

NATIONAL AERONAUTICS AND SPACE ADMINISTRATION GLENN RESEARCH CENTER LEWIS FIELD CLEVELAND, OHIO	UPGRADE ELEC. PROPULSION RESEARCH BLDG 16 PHASE 2			
	SIZE: CA	BLDG 0016 -	PROJECT NO. (REF: QUESTION NO. 26)	DISCP TYPE SEQ.
	AREA: RM 180	(DEMOLITION)	SHEET 1	OF 2
FD BUILDING SOLUTIONS FOR RESEARCH	UNITS: —	SOFTWARE: AUTOCAD 2002		REVISION
	SCALE: NONE	OFFICIAL DATE: 2-16-06		

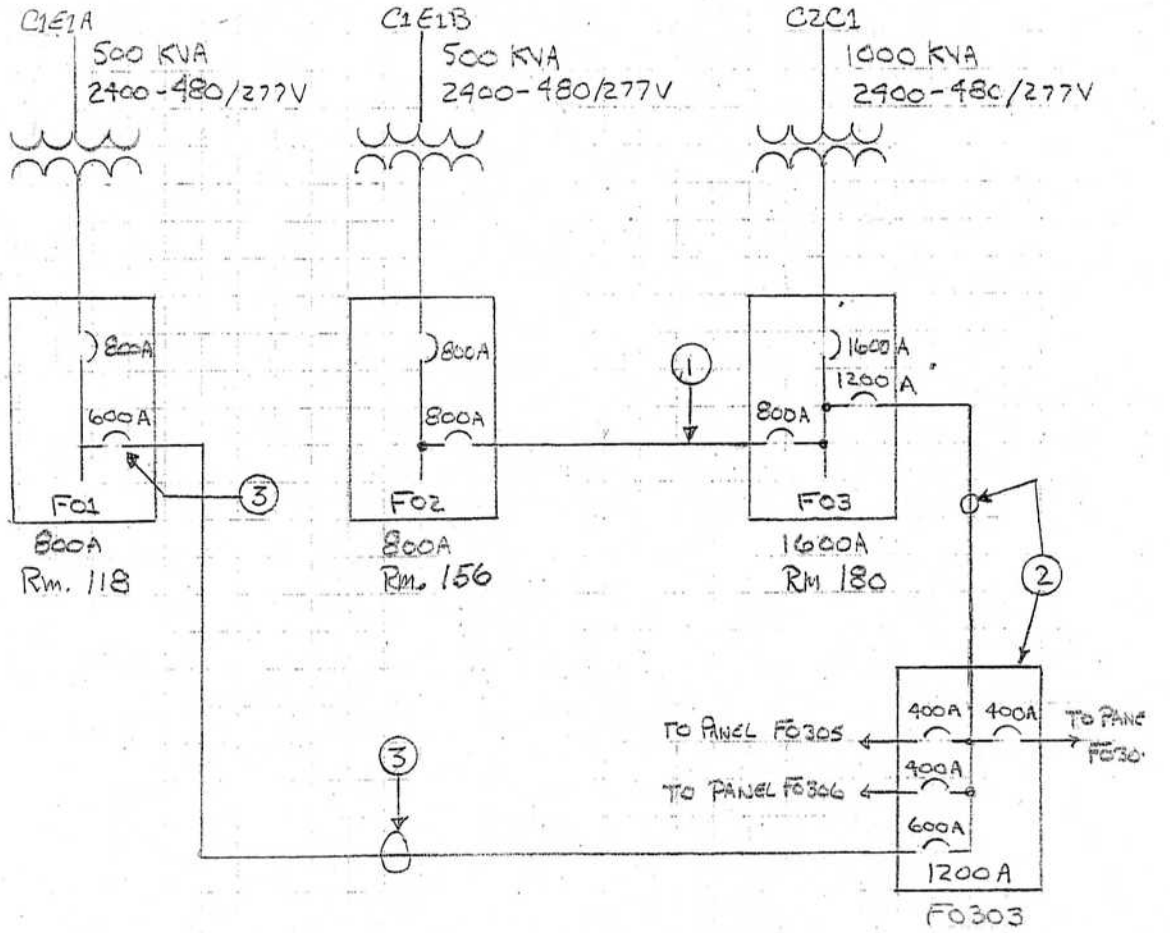

Note1 - Extend conduit within room 180 from existing (2) 3 inch RMC to draw-out switchgear F03. Connect new tie circuit conductors (2) 3-500 KCMIL, 1-1/0 ground to existing 800A circuit breaker.

Note 2 – Purchase and install 1200A panel (F0303). Install (4) 2-1/2 inch RMC from panel F0303 (same location as old F0303) to draw-0out switchgear F03. Connect new feeders (4) 3-350 KCMIL, 1-#1 to existing 1200A circuit breaker. Reconnect existing loads in panel F0303.

Note 3 – Purchase and install 600A breaker. Install new tie circuit (2) 500KCMIL and 1-1/0 ground in 3 inch RMC.

NATIONAL AERONAUTICS AND SPACE ADMINISTRATION GLENN RESEARCH CENTER LEWIS FIELD CLEVELAND, OHIO	UPGRADE ELEC. PROPULSION RESEARCH BLDG 16 PHASE 2			
	SIZE: CA	BLDG 0016 -	PROJECT NO. (REF: QUESTION NO. 26)	DISCP TYPE SEQ.
	AREA: RM 180	(NEW WORK)		SHEET 2 OF 2
FD BUILDING SOLUTIONS FOR RESEARCH	UNITS: –		SOFTWARE: AUTOCAD 2002	REVISION
	SCALE: NONE		OFFICIAL DATE: 2-16-06	