National Aeronautics and Space Administration

Volume 2, NASA Enterprise Architecture:

Office Automation, IT Infrastructure, and Telecommunications

Version # 3.0
August 16, 2004

Table of Changes

Date of Change	Section(s) Affected	Brief Description of Change	Change Made By	Organization
December 22, 2003	Initial Version	Final Version 1.0	Chief Technology Officer, Code AO	NASA Office of the CIO
March 26, 2004	Minor editorial updates	Final Version 2.2	Chief Technology Officer, Code AO	NASA Office of the CIO
July 2, 2004	Minor editorial updates	Final Version 2.3	Chief Technology Officer, Office of the CIO	NASA Office of the CIO
August 2, 24004	Version update, minor editorial changes	Version 3.0 Draft	Bob Stauffer	EA Core Team
August 16, 2004	Entire version updates editorial changes	Version 3.0 Draft	Tressa Reaggle	EA Core Team

Abbreviations and Acronyms

ADA	American with Disabilities Act
ACDS	Administrative Contacts Database System
ACS	Advisory Committee System
ACTS	Advisory Council Tracking System
ADM	Administrative
ADS	Art Database System
ADSC	Application Development Support Contract
ADSI	Active Directory Services Interface
AHS	Application Hosting Service
AHU	Air Handling Unit(s)
ALIS	Ames Locator Information Service
AMES or ARC	Ames Research Center
AMS	NASA Acquisition Management System
APD	Ames Policy Directive
API	Application Programming Interface
ARC	Ames Research Center
ARCLAN	Ames Research Center Local Area Network
ARRS	Agency Reimbursable Reporting System
ARS	Access Request System
ASAL	Administrative Services Address Labeling System
ATM	Asynchronous Transfer Mode
AV	Audio Visual
AWCS	Agency-Wide Coding Structure
BCP	Best Current Practices
BES	Blackberry Enterprise Server
BESS	Budget Execution Support System
BGP	Border Gateway Protocol
BNC	British Naval Connector
BPS	Budget Preparation System
BRI	Basic Rate Interface
BRIC	Knowledge Information Center-Code BR
BRT	Business and Restricted Technology
BUMS	Business Management System
CAD	Computer Aided Design
CADB	Copernicus Art Database (Test and Deploy)
Caltech	California Institute of Technology
CATS II	Corrective Action Tracking System
CATV	Cable Television
CBR	Constant Bit Rate
CBS	Chief Billing Systems
CBX	Central Branch Exchange
CCB	Configuration Control Board
CCC/Harvest	A change management tool by Platinum Technology
CCCB	Center level Configuration Control Board
CCMIS	Call Center Management Information System
CCSDS	Consultative Committee for Space Data

CCTV	Closed Circuit Television
CEE	Collaborative Engineering Environment
CEF	Central Engineering Files
CENTRX	Central Exchange
CFB-R506	Code CFB Reimbursable 506
CG	Character Generator
CI SSMM	Code CI Senior Staff Meeting Minutes
CIBS	Code CI Budget
CIFS	Common Internet File System
CIO	Chief Information Officer
CLASICS	Contact List and Special Interest Computing System
CMM	Capability Maturity Model
CMMS	Corrective Maintenance and Management System
CMOS	Complimentary Metal Oxide Semi-conductor
CMOTS	Career Management Office Tracking System
CMS	Correspondence Management System
CNE	Center Network Environment
COBRA	Cost/Obligations Budgeting Resource Allocation
Code CI - POCs	Point of Contact
Code R-POC	Code R - Point of Contact Database
CODECS	Coder Decoder
COFEDB	Centennial of Flight Event Database
CONG MAPS	Congressional Maps System
COPPA	Child Online Privacy Protection Act
COTR	Contracting Officer's Technical Representative
COTS	Commercial Off-The-Shelf
CRCS	Central Resources Control System
CRLF	Carriage Return / Line Feed
CS	Civil Service
CSDB	Customer Services DataBase
CSO	Computer Security Official
CSOC	Consolidated Space Operations Contract
CVS	A version management tool
DAR	Designated Agency Representative
DBA	Database Administrator
DBAT	Design, Build, Assemble, and Test
DCMS	Discrimination Complaints Management System
DDMS	Design Data Management System
DES	Data Encryption Standard
Designer	Toolset to model, generate and capture the requirements and design of applications
Destination Earth	What On Earth? ESE For Kids Only Game
DFMS	Direct Financial Management System
DFRC	Dryden Flight Research Center
DFRC	Dryden Flight Research Center
DHCP	Dynamic Host Configuration Protocol
DISA	Defense Information Systems Agency
DMZ	Demilitarized Zone
DN	Distinguished Name

DNS	Domain Name Systems
DNS	Domain Name Service
DoD	Department of Defense
DoS	Denial of Service
DSN	Defense Systems Network
DSN	Deep Space Network
DTA	Data Access Service
DTV	Digital Television
DV	Digital Video
DVD	Digital Video Disk
DVE	Digital Video Editor
EADS	EADS North America, Inc. PointSpan 6880 PABX switch manufacturer
EAWG	Enterprise Architecture Working Group
EBS	Emergency Broadcast System
ECAL-R	Enterprise Calendar-Code R
ECRS	Environmental Compliance and Restoration System
ECS	The Enterprise Control Server for the PABX
ECS/EMS	Event Management System
EDMS	Electronic Document Management System
EDS	Exhibits Database System
EFF	Electronic Frontier Foundation
EIA	Electronic Industries Alliance
EIA	Electronics Industry Association
ELS	Electronic Library Service
ELVCom	Expendable Launch Vehicle Compendium
EMA	E-Mail Assistant
EMACS	Extensible, customizable, self-documenting real-time display editor
EMCS	Energy Management Control System
EO	Executive Order
EOC	SSC Emergency Operations Center
ERA	Electronic Registration Application
ERASMUS	NASA Financial Dashboard
ERP	Enterprise Resource Portal
ERRMIS	Training, Awards and Travel Mgmt. Information System
ERWIN	Data Modeler , by AllFusion
e-SPACE	Electronic Strategic Planning and Consensus Engagement
ESSEX	Centrex Type arrangement directly with RBOC
ESX	Earth Science Extranet
F2MS	Freedom2Manage Survey
FAAD	Federal Assistance Award Data System
FACF	Financial and Contractual Status System, Financial
FACT	Financial and Contractual Status, Tables Maintenance System
FAS	Funds Availability System
FAST	Financial Accounting System/Teleprocessing
FASTCASH	FAST Cash Management System
Fax	Facsimile
FCACM	Full Cost Accounting Content Manager
FCA-HP	NASA Full Cost Initiative Homepage

FCC	Federal Communications Commission
FEDTAG	FEDTAG Federal Transportation Advisory Group
FHDS	Facilities Help Desk System
FIPS	Federal Information Processing Standards
FM	Frequency Modulation
FOIA	Freedom of Information
FOIA	Freedom Of Information Act Database
FOIA - 94/95	Freedom of Information Act - History Database
FORM 295	Form 295 Database
FORM 6 - CFS	Form 6 - Code CFS
FOSC	Facilities Operating Services Contractor
FPDS	Federal Procurement Data System
FQDN	Fully Qualified Domain Name
FRMT	Fairmont
FSOP	Financial Status of Programs
FSS	Facility Sustainment System
FTE	Full Time Equivalent
FTP	File Transfer Protocol
FTR/PR	Financial Transaction Report/Procurement Report
FTS	Federal Telecommunications System
FUS	Facility Utilization System
FY	Fiscal Year
GB	GigaBits
GBLT	Greenbelt
Gbps	Gigabits per second
GISS	Goddard Institute for Space Studies
GLAS	General Ledger Accounting System
GOS	Guest Operations Database System
GP	General Purpose (Desktop Seats)
GRC	Glenn Research Center at Lewis Field
GRIN	Great Images in NASA
GSA	General Services Administration
GSFC	Goddard Space Flight Center
GUI	Graphical User Interface
H.323	ITU Video Conferencing Standards (H Series)
HAMS	Headquarters Account Tracking and Management System
HATS	Headquarters Action Tracking System
HCSS	Code H Customer Satisfaction Survey
HD	High Definition
HDTV	High Definition Television
HHAD	HQ Honor Awards Database
HHTI	Home and Home Technology Information Website
HLFC	Highlight Financial Cost
HONURS	HQ ODIN New User Request System
HPSS	Headquarters Personnel Security System
HQ	NASA Headquarters
HQ NEF Search	NASA Electronic Form Search
HQAEARS	Headquarters Affirmative Employment Analysis & Reporting System

HQDMS-A	Headquarters Document Management System
HQDMS-B	Code B Headquarters Document Management System
HQDMS-BWPCP	Headquarters Document Management System - Basis Web Password Change Page
HQDMS-CIC	CIC Headquarters Document Management System
HQDMS-CP	Headquarters Document Management System - Code CP
HQDMS-G	Headquarters Document Management System -Code G
HQDMS-GP / LDD	LDD Legal Documents Database
HQDMS-I	Code I Headquarters Document Management System
HQDMS-JE	HQ Document Mangement System - Code JE
HQDMS-LD	Headquarters Document Management System - Code LD
HQDMS-M	Headquarters Document Management System - Code M
HQDMS-Q	Headquarters Document Management System - Code Q
HQDMS-U	Code U Document Management System
HQDMS-ZH	ZH Headquarters Document Management System
HQDRW	Headquarters Data Reconciliation Warehouse
HQDSW-CFB	Headquarters Decision-Support Warehouse - Code CFB
HQeD	Headquarters e-Directory
HQLI	Headquarters Line Item Database
HR	House Resolution
HRTS	Human Resources Tracking System
HTTP	Hypertext Transfer Protocol
HTTPS	Secure HTTP
IADS	International Agreements Database System
IBM	International Business Machines Corporation
IBMP	Institute for BioMedical Problems
ICONS	Inventions and Contributions System
IDS	Intrusion Detection System
IEEE	Institute of Electrical and Electronics Engineers
IETF	Internet Engineering Task Force
IFM	Integrated Financial Management
IFMP	Integrated Financial Management Program
IFM-UIDB	NASA HQ IFM User Information Database
IG I	Inspector General
IMAP	Internet Message Access Protocol
IMAP4	Internet Message Access Protocol version 4
IMPASS	Imagery, Media, and Public Affairs Support Services
IMR	Inbound Message Relay
IP	Internet Protocol
IPSec	IP Security
IRIS	Incident Report Information System
IRS	Infocom Reader Survey
IS	Information Systems
ISAS	Institutional Services and Support (IT support contract)
ISCP	Inside Cable Plant
ISD	Information Systems Directorate
ISDN	Integrated Services Digital Network
ISO	International organization for standardization
ISO9000	ISO 9000 Project Implementation System

ISP	Internet Service Provider
IT	Information Technology
ITS	Information Technology Security
ITSM	IT Security Manager
ITSP	
ITU	International Teleconferencing Union
IV&V	NASA Independent Verification and Validation Facility
IVR	Interactive Voice Response System
IWMS	ISEM Work Management System
IXC	Interexchange Carrier Access
JAVA	Portable programming language or platform consists of pre-defined set of JAVA classes
JCSS	Code J Customer Satisfaction Survey
JDBC	Sun's database-independent SQL-level API for database connection
JENS	JSC Emergency Notification System
JPL	Jet Propulsion Laboratory
JSC	Johnson Space Center
JumpStart	Automatic installation of the SUN Solaris operating systems and additional software
Kbps	Kilobits per second
KIC-A	Knowledge Information Center-Code AE (KIC-AE)
KIC-FT	Knowledge Information Center-Code FT
KIC-ISEM	Knowledge Information Center for ISEM
KIC-J	Code J Knowledge Information System
KIC-M	Knowledge Information Center-Code M
KIC-Q	Knowledge Information Center - Code Q (KIC Q)
KIC-R	Knowledge Information Center-Code R
KIC-Z	KIC-Z Knowledge Information Center CATF
Kmail	Kennedy Mail System
KSC	Kennedy Space Center
KVM	Keyboard Video Mouse
LADS	Legislative Affairs Database
LAN	Local Area Network
LARC or LaRC	Langley Research Center
LaRC TV	Langley Television
LaRCNET	Langley Local Area Network
LaRCViN	Langley Video Network
LBV	Low-Bandwidth Videoconference unit
LCD	Liquid Crystal Display
LDAP	Lightweight Directory Access Protocol
LDIF	LDAP Data Interchange Format
LESCO	Contractor Name
LIMS	Logistics Technology Automation Network
LPAR	Logical Partition
LTS	Agency-Wide Litigation Tracking System
M&O	Management and Operations
MA	Maintenance (Desktop Seats)
MAF	Michoud Assembly Facility
MAN	Metropolitan Area Network
MAPI	Messaging Application Programming Interface

MAPS	Mail Abuse Prevention System
MBPD	Master Buy Plan Database
Mbs	Megabits per second
MCU	Multipoint Control Unit
MFI	Major Facility Inventory
M-HATS	OSF Web HATS Interface
MIC	Meeting in conference
MIME	Multi-purpose Internet Mail Extensions
Minority Outreach Web Site	Minority Outreach Web Site
MIPS	Millions of Instructions Per Second
MM	Multi-mode fiber
MODIS	Moderate Resolution Imaging Spectroradiometer
MOU	Memorandum of Understanding
MPEG	Moving Pictures Experts Group
MR	Material Request
MS	Message Store
MSDS	Media Services Database System
MSFC	Marshall Space Flight Center
MSN	Mission Information
MSP	Managed Service Provider
MTA	Message Transfer Agent
MUA	Mail User Agent
MX	Mail Exchange
NACC	NASA ADP Consolidation Center
NAD	Network Active Device (Desktop Seats)
NAIS	NASA Acquisition Internet Service
NAS	Network Access Server
NASA	National Aeronautics and Space Administration
NASA HPEDIT	NASA Homepage Editor
NCC	NASA Clearance Clearinghouse
NCCS	NASA Communications and Computing Services
NCIS	NASA Commercial Information System
NCRS	Name Check Request System
NCTN	NASA Commercial Technology Network Homepage
NDES	NASA Data Entry System
NEC	Neptune Event Calendar
NEC	Nippon Electric Corporation
NEMS	NASA Equipment Management System
NFMS	NASA Functional Management System
NIS II	Office of Inspector General Nationwide Information System II
NISN	NASA Integrated Services Network
NISSU	NASA Information Systems Services Utility
NMC	Network Monitoring Center
NOC	Network Operations Center
NOVIS	Naked-eye Orbital Visibility Information System
NPD	NASA Policy Directive
NPDMS	NASA Property Disposal Management System
NPG	NASA Procedures and Guidelines

NPMS	NASA Procurement Management System
NPPS T&A	NASA Personnel and Payroll SystemTime & Attendance
NPSS	NASA Personnel Security System
NRL	Naval Research Laboratory
NSMS	NASA Supply Management System
NTLM	NT LAN Manager (Windows NT Challenge/Response authentication)
NTP	Network Time Protocol
NTSC	National Television Standard Committee - Commission
NVSS	NASA Vendor Survey System
OAO	Orbiting Astronomical Observatory
OAT HP	Office of Aerospace Technology Website
OAT-IN	Office of Aerospace Technology Intranet
OCI	A library of standard database access and retrieval functions for C interface
Octel 300	Octel 300 Serenade voicemail system
ODBC	Open database connectivity, an API with which to access Data Sources
ODIN	Outsourcing Desktop Initiative for NASA
OFSA	Office of Safety and Facility Assurance
OMB	Office of Management Budget
OPSEC	Open Platform for Secure Enterprise Connectivity
ORACLE	Corporation with products for database, application, and development tools
ORR	Operations Readiness Review
OS	Operating System
OSCP	Outside Cable Plant
OSDBU	Office of Small and Disadvantaged Business Utilization
OSF-IN	Office of Space Flight Intranet
OSI	Open Systems Interconnection
OWEB	ODIN WEB Seat Ordering Application
PA	Public Address
PABX	EADS PointSpan 6880 Switch (Rev 2.0.Z)
PBMA	PBMA Process Based Mission Assurance
PBS	Public Broadcasting Service
PBX	Private Branch Exchange
PC	Personal Computer
PCITS	Principal Center for Information Technology Security
PCTR	Personnel Ceiling Transaction Report
PDS	PDS Personnel Database System
PERL	A portable programming language mostly used in system and web services
PFSS	Parking and Fare Subsidy System
PIO	Process Improvement Opportunity
PIP	Premium Service
PKI	Public Key Infrastructure
PLDS	Photo Library Database System
PMAS	Code R Program Management Accomplishment System
POP	Post Office Protocol
POP3	Post Office Protocol version 3
PRC	Program Review Center
PRDB	Procurement Request Database (Code U)
PRI	Primary Rate Interface

PRN	Printer (Desktop Seats)
PSLA	Project Service Level Agreement
PSRS (Web-Based)	Web-Based Program Status Review System
PTD	Propulsion Test Directorate
PUB	Public Access
QoS	Quality of Service
R!50	A nearline storage by Network Appliance
R.W.A	Registration Site Web Application
RADIUS	Remote Access Dial In User Service
RAM	Random Access Memory
RAMIS DL-MAC	RAMIS DL-MAC RAMIS Downloader - Macint
RAS	Remote Access Service
RBL	Real-time Blackhole List
RBOC	Regional Bell Operating Company
RBS-GSFC	Reimbursable Billing System-GSFC
RBS-JPL	Reimbursable Billing System-JPL (RBS-JPL)
RCM	Remote Communications Modules
RDBMS	Relational Database Management System
RDMS	Relational Database Management System
RDN	Relative Distinguished Name
RF	Radio Frequency
RFC	Request for Comment (Internet Society or IETF draft)
RIB	Code R Image Bank
RIDERS	RIDERS
RIID	Records Inventory and Information Directory
RISO BB	Code R ISO 9000 Bulletin Board
RISO DD	OAT Documents and Data
RISO OJT	OAT On-the-Job Training (OJT) Materials
RISO OWI	Code R Approved OWI's (Working Files)
RISO REP	Code R Repository
RISO TT	This 'n That
RITA	Relocation Income Tax Allowance
RMRS	Resource Management Reporting System
RPI	Real Property Inventory
RSS	Relay Spam Stopper
RTCMD	Recording Tracking Classified Material Destruction
RTIFM	Road to IFM
RWES	RSVP Web E-mail System
SA	System Administrator
SAN	Storage Area Network
SAP	Status of Approval Programs
SASL	Simple Authentication Security Level
SBAR	Speaker's Bureau Asset Repository
SBC	SBC Communications
SBDS	Speaker's Bureau Database System
SBR	Small Business Report
SD	Standard Definition
SDC	Stennis Data Center

SDTV	Standard Definition Television
SEDB	Special Event Database System
SEDSA	Schedule of Estimated Distribution of Selected Accounts
SFA	Space Flight Awareness Honoree Database
SIDD	Shuttle-Interagency Debris Database
SLI	Space Launch Initiative
SMB	Server Message Block
SMIME	Secure Multipurpose Internet Mail Extensions
SMTP	Simple Mail Transfer Protocol
SNMP	Simple Network Management Protocol
SOLAR	Site for On-line Learning and Resources
SQL	Structured Query Language
SRFR	Secure Remote File Site
SRL	SAFE AND ROOM LOCATION
SSC	Stennis Space Center
SSH	Secure Shell Protocol
SSL	Secure Socket Layer Protocol
St Dept Word Macro	St. Department Word Macro
STADS	SAP Time and Dollars System
STD	Standard
STI	Scientific and Technical Information
SUDO	A tool which allows SA to give certain user(s) to run some commands as root.
TCP	Transmission Control Protocol
TDD	Telecommunications device for the deaf
TGIR	Turning Goals Into Reality Registration
TIA	Telecommunications Industry Association
TIMS	Token Information Management System
TLC	Time and Labor Collection
TLS	Transport Layer Security
TMS	Travel Management System
TOIP	Telecommunications over Internet Protocol
TOS	Type of Service
TSU	Travel System-U
TTL	Time to Live
TTSC	Test and Technical Services Contactor
TV	Television
UBE	Unsolicited Bulk Email
UCE	Unsolicited Commercial Email
UDP	User Datagram Protocol
UIS	User Information System
UMC	Universal Modular Chassis
UMIS	University Management Information System
Unix	Unix Operating System
UPATS	Unit Price Agreement Tracking
UPS	Un-interruptible Power Source
URI	Uniform Resource Identifiers
UTNS	User Training Needs Survey
UUCP	Unix-to-Unix Copy Protocol

VAFB	Vandenberg Air Force Base
VBS	Video Bridging Services
VCR	Video Cassette Recorder
VCRS	Video Conference Request System
VDA	Virtual Private Network
VFDS	Video File Database System
VIP	Virtual IP
Visual Cafe	Development/integration tool for JAVA by Symantec
ViTS	Video Teleconferencing System
VLAN	Virtual Local Area Network
VOIP	Voice over Internet Protocol
VoTS	Voice Teleconferencing Services
VPN	Virtual Private Network
VRA	ViTS Roll-About
VRRP	Virtual Router Redundancy Protocol
VSA	Vendor Specific Attribute
VTC	Video Teleconferencing Center
VTR	Video Tape Recorder
W2K	Windows 2000
WAN	Wide Area Network
W-AO OCIO	Office of the Chief Information Officer Home Page
Web Tads – Web access Time and Attendance	
Website-AFU	Code AF Updates
Website-CIS	Code CI Services
Website-Code AE	Website-Code AE
Website-Code CI	Website-Code CI
Website-Code CP	Website-Code CP
Website-Code FP	Website-Code FP
Website-Code G	Website-Code G
Website-Code I	Website-Code I
Website-Code ID	Website-Code ID (Export Control)
Website-Code JM	Code JM/ARL Home Page
Website-Code K	Website-Code K
Website-Code RG	Website-Code RG Code RG Aerospace Website
Website-Code Z	Code Z Website
Website-CPUB	Web-Based Response to Public Queries
Website-ECP	Website -ECP-TBD
Website-FOIA	Website-FOIA
Website-OSF	Office of Space Flight Website
Website-SPB	Website-SPB Speaker's Bureau Website
Website-VITS	Website-VITS VITS Web Page
Websphere	Software platform by IBM
WFF	Wallops Flight Facility
W-HQ ITC	HQ Information Technology & Communications Division Home Page
WIMS	Workforce Information Management System
WITS	Washington Interagency Telecommunications Service
W-P NWP	Code P NASA Web Page (HQ Web Page)
WSTF	White Sands Test Facility

W-U PWS	Code U Public Website
W-UM SSC	W-UM SCC Code U&M Space Station Commercialization Web Site
WWW	World-Wide-Web
WYE	Workyear Equivalent
X.500	Directory Access Protocol (ISO/TSU-T suite of standards)
X.500 BACKSTORE	X.500 BACKSTORE
X.509	Version 3 Public-Key Certificate (ISO/TSU-T suite of standards)
XML	eXtensible Markup Language

DOCUMENT OUTLINE

NASA Enterprise Architecture: Volume 1, Overall Architecture and Governance

Executive Overview
Introduction
NASA'S Information Resource Management Strategy
The NASA Enterprise Architecture
"To be" Directions
Policies and Procedures
Appendix A: Enterprise Architecture RoadMap
Appendix B: The Bell South Lifecycle Model

NASA Enterprise Architecture: Volume 2, Office Automation, IT Infrastructure, and Telecommunications Investment Category

Introduction
Center "As-is" Technical Architectures

NASA Enterprise Architecture: Volume 3, Program Unique IT and Multi-Program / Project IT Investment Category

Introduction
Mission IT "As-is" Architectures

NASA Enterprise Architecture: Volume 4, Structure and Strategies

Introduction
NASA IT Strategy, Goals and Objectives
Enterprise Architecture Authority and Management Structure
Structure of the NASA Enterprise Architecture
Office Automation, IT Infrastructure, and Telecommunications (OAIT) Investment Category - Technical Summary Description
Program Unique IT and Multi-Program / Project IT Investment Category – Technical Summary Descriptions
Gap and Flashpoint Analysis

NASA Enterprise Architecture: Volume 5, NASA To-Be Architecture, Approach to Design and Implementation

Introduction
NASA Portfolio Model
The NASA Enterprise Architecture Vision
Current and Future State of the NASA Portfolio
Customized NASA IT Portfolio and FEA Service Component Model
Summary

NASA Enterprise Architecture Volume 6: Policies and Procedures

Introduction
Summary

TABLE OF CONTENTS

VOLUME 2, NASA ENTERPRISE ARCHITECTURE: 1

OFFICE AUTOMATION, IT INFRASTRUCTURE, AND TELECOMMUNICATIONS 1

TABLE OF CHANGES III

DOCUMENT OUTLINE XVI

NASA ENTERPRISE ARCHITECTURE: VOLUME 1, OVERALL ARCHITECTURE AND GOVERNANCE XVI
NASA ENTERPRISE ARCHITECTURE: VOLUME 2, OFFICE AUTOMATION, IT INFRASTRUCTURE, AND TELECOMMUNICATIONS INVESTMENT CATEGORY XVI
NASA ENTERPRISE ARCHITECTURE: VOLUME 3, PROGRAM UNIQUE IT AND MULTI-PROGRAM / PROJECT IT INVESTMENT CATEGORY XVI
NASA ENTERPRISE ARCHITECTURE: VOLUME 4, STRUCTURE AND STRATEGIES XVI
NASA ENTERPRISE ARCHITECTURE: VOLUME 5, NASA TO-BE ARCHITECTURE, APPROACH TO DESIGN AND IMPLEMENTATION XVI
NASA ENTERPRISE ARCHITECTURE VOLUME 6: POLICIES AND PROCEDURES XVI

FIGURE REFERENCES XXII

1 INTRODUCTION 1

2 DEFINITIONS 9

2.1.1 Communication Services 9
2.1.2 Wide Area Network 9
2.1.3 Local Area Network 9
2.1.4 Voice 9
2.1.5 Video 10
2.1.6 Computing Services 10
2.1.7 Desktop Hardware and Software 10
2.1.8 Application Services 10
2.1.9 Data Center 11
2.1.10 Electronic Work Environment 11
2.1.11 Messaging and Collaboration 11
2.1.12 E-Presence 11
2.1.13 XML 12
2.1.14 WEB 12

3 AMES RESEARCH CENTER (ARC) 13

3.1 GENERAL INTRODUCTION 13
3.2 COMPUTING SERVICES SEGMENT 13
3.2.1 Desktop Hardware & Software Component 13
3.2.2 As Is Condition 14
3.2.3 Systems Description and Operational Concept 14
3.2.4 Desktop Productivity Tools 15
3.2.5 Production Network Diagram 15
3.2.6 Systems and Support 16
3.2.7 Facilities 16
3.2.8 Technology Flashpoints 17
3.2.9 Compliance 17
3.2.10 Capabilities 17
3.2.11 To Be Condition 17
3.2.12 Application Services Component 17
3.2.13 As Is Condition 18
3.2.14 Systems Description and Operational Concept 19
3.2.15 Production Network Diagram 20

3.2.16 Systems and Support 20
3.2.17 Facilities 21
3.2.18 Technology Flashpoints 21
3.2.19 Compliance 21
3.2.20 Capabilities 21
3.2.21 To Be Condition 21
3.2.22 Data Center Component 22
3.2.23 As Is Condition 22
3.2.24 Systems Description and Operational Concept 22
3.2.25 Production Network Diagram 22
3.2.26 Systems and Support 23
3.2.27 Facilities 23
3.2.28 Technology Flashpoints 24
3.2.29 Compliance 24
3.2.30 Capabilities 24
3.2.31 To Be Condition 24
3.3 COMMUNICATIONS SEGMENT 25
3.3.1 Wide Area Network (WAN) Component 25
3.3.2 As Is Condition 25
3.3.3 Systems Description and Operational Concept 25
3.3.4 Production Network Diagram 25
3.3.5 Systems and Support 26
3.3.6 Facilities 26
3.3.7 Technology Flashpoints 26
3.3.8 Compliance 27
3.3.9 Capabilities 27
3.3.10 To Be Condition 27
3.3.11 Local Area Network (LAN) Component 27
3.3.12 As Is Condition 27
3.3.13 Systems Description and Operational Concept 27
3.3.14 Production Network Diagram 28
3.3.15 Systems and Support 29
3.3.16 Facilities 29
3.3.17 Technology Flashpoints 30
3.3.18 Compliance 30
3.3.19 Capabilities 30
3.3.20 To Be Condition 30
3.3.21 Voice Component 31
3.3.22 As Is Condition 31
3.3.23 Systems Description and Operational Concept 31
3.3.24 Production Video Network Diagram 32
3.3.25 Systems and Support 32
3.3.26 Facilities 32
3.3.27 Technology Flashpoints 33
3.3.28 Compliance 33
3.3.29 Capabilities 33
3.3.30 To Be Condition 33
3.3.31 Video Component 33
3.3.32 As Is Condition 33
3.3.33 Systems Description and Operational Concept 34
3.3.34 Production Network Diagram 34
3.3.35 Systems and Support 35
3.3.36 Facilities 35
3.3.37 Technology Flashpoints 36
3.3.38 Compliance 36
3.3.39 Capabilities 36

3.3.40 To Be Condition ... *36*
3.4 ELECTRONIC WORK ENVIRONMENT SEGMENT ... 37
3.4.1 Messaging and Collaboration Component ... *37*
3.4.2 As Is Condition ... *37*
3.4.3 Systems Description & Operational Concept ... *37*
3.4.4 Production Network Diagram ... *38*
3.4.5 Systems & Support ... *39*
3.4.6 Facilities ... *39*
3.4.7 Technology Flashpoints ... *39*
3.4.8 Compliance ... *40*
3.4.9 Capabilities ... *41*
3.4.10 To Be Condition ... *41*
3.4.11 Public Web Component ... *41*
3.4.12 As Is Condition ... *41*
3.4.13 Systems Description and Operational Concept ... *41*
3.4.14 Production Network Diagram ... *42*
3.4.15 Systems and Support ... *43*
3.4.16 Facilities ... *44*
3.4.17 Technology Flashpoints ... *44*
3.4.18 Compliance ... *44*
3.4.19 Capabilities ... *44*
3.4.20 To Be Condition ... *44*

4 GLENN RESEARCH CENTER (GRC) ... 45

4.1 COMPUTING SERVICES SEGMENT ... 45
4.1.1 Desktop Hardware and Software Component ... *45*
4.1.2 As is Condition ... *45*
4.1.3 Systems description and Operational Concept ... *45*
4.1.4 Systems and Support ... *47*
4.1.5 Facilities ... *47*
4.1.6 Technology Flashpoints ... *48*
4.1.7 Application Services Component ... *48*
4.1.8 Systems description and Operational Concept ... *49*
4.1.9 Graphics and Visualization (GVIZ) Services ... *49*
4.1.10 Network Time Services ... *52*
4.1.11 Usenet Service ... *52*
4.1.12 Network File System Services ... *53*
4.1.13 Integrated Print Services ... *53*
4.1.14 Experimental Data Services ... *54*
4.1.15 Central FTP Service ... *55*
4.1.16 External FTP Service (external-ftp.grc.nasa.gov) ... *56*
4.1.17 Central UNIX File, Application, License and X-Windows Services ... *56*
4.1.18 Systems and Support ... *59*
4.1.19 Facilities ... *59*
4.1.20 Technology Flashpoints ... *59*
4.1.21 Data Center Component ... *59*
4.1.22 As is Condition ... *60*
4.1.23 Data Center Servers ... *64*
4.2 SYSTEMS DESCRIPTION AND OPERATIONAL CONCEPT ... 64
4.2.1 System Interfaces ... *64*
4.2.2 Service Abstraction Requirements ... *65*
4.2.3 Systems and Support ... *68*
4.2.4 Facilities ... *68*
4.2.5 Technology Flashpoints ... *69*
4.2.6 Open Problems ... *69*
4.2.7 Limitations ... *69*

4.2.8 *To Be Condition* 70
4.3 COMMUNICATIONS SEGMENT 70
4.3.1 *Wide Area Network (WAN) Component* 70
4.3.2 *Production Network Diagram* 70

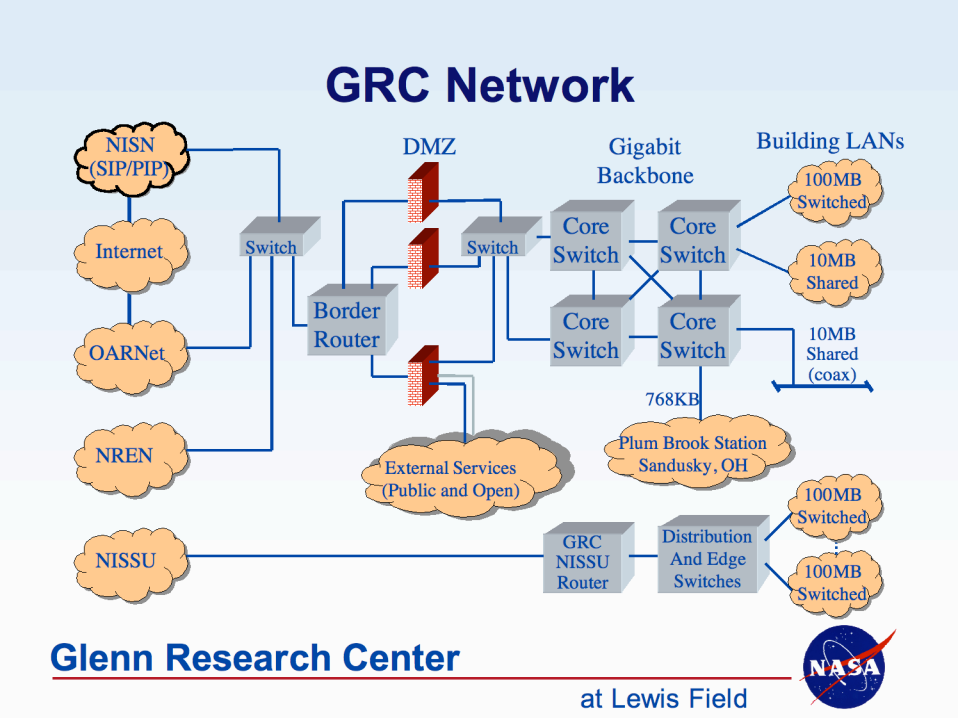

..... 71
4.3.3 *Local Area Network (LAN) Component* 71
4.3.4 *Introduction* 71
4.3.5 *As Is Condition* 71
4.3.6 *Systems Description and Operational Concept* 73
4.3.7 *Production Network Diagram* 74
4.3.8 *Systems and Support* 75
4.3.9 *Service Interfaces* 76
4.3.10 *Service Abstraction Environment* 76
4.3.11 *Support Processes* 77
4.3.12 *Facilities* 77
4.3.13 *Technology Flashpoints* 78
4.3.14 *Compliance* 78
4.3.15 *Capabilities* 78
4.3.16 *To Be Condition* 78
4.3.17 *Voice Component* 79
4.3.18 *Technology Flashpoints* 80
4.3.19 *To Be Condition* 81
4.3.20 *Operational and Emergency Intercom (O&EI) System* 81
4.3.21 81
4.3.22 *Systems Description and Operational Concept* 81
4.3.23 *Technology Flashpoints* 82
4.3.24 *Systems Description and Operational Concept* 83
4.3.25 *Systems and Support* 83
4.3.26 *Teleconferencing Services* 83
4.3.27 *Systems Description and Operational Concept* 83
4.3.28 *Trunked Radio System* 87
4.3.29 *Systems Description and Operational Concept* 87
4.3.30 *Technology Flashpoints* 89

4.3.31 Voice Messaging System ... *89*
4.3.32 Systems Description and Operational Concept ... *89*
4.3.33 Systems and Support ... *90*
4.3.34 Video Component ... *90*
4.3.35 Systems Description and Operational Concept ... *90*
4.3.36 Technology Flashpoints ... *93*
4.4 ELECTRONIC WORK ENVIRONMENT COMPONENT ... 93
4.4.1 Messaging and Collaboration Component ... *93*
4.4.2 As is Condition ... *94*
4.4.3 Systems Description and Operational Concept ... *95*
4.4.4 Systems and Support ... *99*
4.4.5 Facilities ... *100*
4.4.6 Technology Flashpoints ... *100*
4.4.7 Public Web Component ... *100*
4.4.8 As is Condition ... *100*
4.4.9 Systems Description and Operational Concept ... *101*
4.4.10 Production Network Diagram ... *101*
4.4.11 Facilities ... *102*
4.4.12 Compliance ... *102*
4.4.13 To Be Condition ... *102*

5 GODDARD SPACE FLIGHT CENTER (GSFC) ... 103

5.1 INTRODUCTION ... 103
5.1.1 Architecture Drivers ... *103*
5.1.2 External Drivers ... *103*
5.1.3 Internal Drivers ... *104*
5.1.4 Architecture Components ... *104*
5.2 COMPUTING SERVICES SEGMENT ... 106
5.2.1 Desktop Hardware and Software Component ... *106*
5.2.2 As-Is Condition ... *106*
5.2.3 Systems description and Operational Concept ... *109*
5.2.4 Systems and Support ... *113*
5.2.5 Facilities ... *114*
5.2.6 Technology Flashpoints ... *115*
5.2.7 Compliance ... *115*
5.2.8 Capabilities ... *115*
5.2.9 To Be Condition ... *115*
5.2.10 Data Center Component ... *116*
5.3 COMMUNICATIONS SEGMENT ... 116
5.3.1 Wide Area Network Component ... *116*
5.3.2 Local Area Network Component ... *116*
5.3.3 As is Condition ... *116*
5.3.4 Systems Description and Operational Concept ... *116*
5.3.5 Security ... *117*
5.3.6 Production Network Diagram ... *118*
5.3.7 Systems and Support ... *119*
5.3.8 Facilities ... *119*
5.3.9 Technology Flashpoints ... *120*
5.3.10 Compliance ... *120*
5.3.11 Capabilities ... *120*
5.3.12 Voice Component ... *120*
5.3.13 As Is Condition ... *121*
5.3.14 System Description and Operational Concept ... *121*
5.3.15 Production Network Diagram ... *123*
5.3.16 Systems and Support ... *124*
5.3.17 Facilities ... *125*

5.3.18 Technology Flashpoints *125*
5.3.19 Compliance *125*
5.3.20 Capabilities *126*
5.3.21 To Be Condition *126*
5.3.22 Video Component *127*
5.3.23 As is Condition *127*
5.3.24 Systems description and Operational Concept *127*
5.3.25 Production Network Diagram *130*
5.3.26 Systems and Support *132*
5.3.27 Facilities *132*
5.3.28 Technology Flashpoints *133*
5.3.29 Compliance *134*
5.3.30 Capabilities *134*
5.3.31 To Be Condition *134*
5.4 ELECTRONIC WORK ENVIRONMENT SEGMENT 134
5.4.1 Messaging and Collaboration *134*
5.4.2 As is Condition *134*
5.4.3 Systems Description and Operational Concept *135*
5.4.4 Systems and Support *135*
5.4.5 Facilities *135*
5.4.6 Technology Flashpoints *135*
5.4.7 Capabilities *135*
5.4.8 To Be Condition *135*
5.4.9 Public Web Component *135*
5.4.10 As is Condition *136*
5.4.11 Systems and Support *136*
5.4.12 Facilities *136*
5.4.13 Technology Flashpoints *136*
5.4.14 Compliance *136*
5.4.15 Capabilities *136*
5.4.16 To Be Condition *137*
5.4.17 References *137*

6 HEADQUARTERS (HQ) 138

6.1 COMPUTING SERVICES SEGMENT 138
6.1.1 Desktop Hardware and Software Component *138*
6.1.2 As is Condition *138*
6.1.3 Systems Description and Operational Concept *138*
6.1.4 Production Network Diagram *138*
6.1.5 Systems and Support *139*
6.1.6 Facilities *139*
6.1.7 Technology Flashpoints *140*
6.1.8 Compliance *140*
6.1.9 Capabilities *140*
6.1.10 To Be Condition *141*
Table 11: Desktop Hardware and Software *142*
6.1.11 Application Services Component *144*
6.1.12 As is Condition *144*
6.1.13 Systems description and Operational Concept *144*
6.1.14 Systems and Support *145*
6.1.15 Facilities *145*
6.1.16 Technology Flashpoints *146*
6.1.17 Compliance *146*
6.1.18 Capabilities *146*
6.1.19 Data Center Component *147*
6.1.20 As is Condition *148*

6.1.21 Systems description and Operational Concept ... *148*
6.1.22 Production Network Diagram ... *148*
6.1.23 Systems and Support ... *149*
6.1.24 Facilities ... *150*
6.1.25 Technology Flashpoints ... *150*
6.1.26 Compliance ... *150*
6.1.27 Capabilities ... *150*
6.1.28 To Be Condition (Pending funding availability) ... *151*
6.1.29 Referenced Documents ... *151*
6.2 COMMUNICATIONS SEGMENT ... 159
6.3 WIDE AREA NETWORK (WAN) COMPONENT ... 159
6.4 AS IS CONDITION ... 159
6.4.1 Systems Description and Operational Concept ... *160*
6.4.2 Production Network Diagram ... *160*
6.4.3 Systems and Support ... *160*
6.4.4 Facilities ... *161*
6.4.5 Technology Flashpoints ... *162*
6.4.6 Compliance ... *162*
6.4.7 Capabilities ... *162*
6.4.8 To Be Condition ... *163*
6.4.9 Local Area Network Component ... *164*
6.4.10 As is Condition ... *164*
6.4.11 Systems description and Operational Concept ... *164*
6.4.12 Production Network Diagram ... *165*
6.4.13 HQ Wireless Network ... *167*
6.4.14 Systems and Support ... *167*
6.4.15 Facilities ... *167*
6.4.16 Technology Flashpoints ... *168*
6.4.17 Compliance ... *168*
6.4.18 Capabilities ... *168*
6.4.19 To Be Condition ... *169*
6.4.20 Voice Component ... *171*
6.4.21 As is Condition ... *171*
6.4.22 Systems Description and Operational Concept ... *171*
6.4.23 Production Network Diagram ... *172*
6.4.24 Systems and Support ... *173*
6.4.25 Facilities ... *173*
6.4.26 Technology Flashpoints ... *173*
6.4.27 Compliance ... *173*
6.4.28 Capabilities ... *173*
6.4.29 To Be Condition (Pending funding availability) ... *173*
6.4.30 Video Component #1 of 3 ... *174*
6.4.31 As is Condition ... *174*
6.4.32 Systems Description and Operational Concept ... *174*
6.4.33 Systems and Support ... *174*
6.4.34 Facilities ... *174*
6.4.35 Technology Flashpoints ... *175*
6.4.36 Compliance ... *175*
6.4.37 Capabilities ... *175*
6.4.38 To Be Condition ... *176*
6.4.39 Referenced Documents ... *176*
6.4.40 Video Component #2 of 3 ... *176*
6.4.41 As is Condition ... *176*
6.4.42 Systems Description and Operational Concept ... *177*
6.4.43 Systems and Support ... *177*
6.4.44 Facilities ... *177*

6.4.45 *Technology Flashpoints* 177
6.4.46 *Compliance* 177
6.4.47 *Capabilities* 178
6.4.48 *To Be Condition* 178
6.4.49 *Video Component #3 of 3* 178
6.4.50 *As is Condition* 179
6.4.51 *Systems Description and Operational Concept* 179
6.4.52 *Production Network Diagram* 180
6.4.53 *Systems and Support* 181
6.4.54 *Facilities* 181
6.4.55 *Technology Flashpoints* 181
6.4.56 *Compliance* 181
6.4.57 *Capabilities* 181
6.4.58 *To Be Condition* 182
6.4.59 *Referenced Documents* 182
6.5 ELECTRONIC WORK ENVIRONMENT SEGMENT 182
6.5.1 *Messaging and Collaboration Component #1* 182
6.5.2 *As is Condition* 183
6.5.3 *Systems Description and Operational Concept* 183
6.5.4 *Production Network Diagram* 183
6.5.5 *Systems and Support* 184
6.5.6 *Facilities* 184
6.5.7 *Technology Flashpoints* 184
6.5.8 *Compliance* 185
6.5.9 *Capabilities* 185
6.5.10 *To Be Condition* 185
6.5.11 *Referenced Documents* 185
6.5.12 *Messaging and Collaboration Component #2* 185
6.5.13 *As is Condition* 185
6.5.14 *Production Network Diagram* 187
6.5.15 *Systems and Support* 187
6.5.16 *Facilities* 188
6.5.17 *Technology Flashpoints* 188
6.5.18 *Compliance* 188
6.5.19 *Capabilities* 188
6.5.20 *To Be Condition* 188
6.5.21 *Public Web Component* 188
6.5.22 *As is Condition* 189
6.5.23 *Systems description and Operational Concept* 189
6.5.24 *Production Network Diagram* 189
6.5.25 *Systems and Support* 189
6.5.26 *Facilities* 190
6.5.27 *Technology Flashpoints* 190
6.5.28 *Compliance* 190
6.5.29 *Capabilities* 190
6.5.30 *To Be Condition* 190

7 JET PROPULSION LABORATORY (JPL) 191

7.1 COMPUTING SERVICES SEGMENT 191
7.1.1 *Desktop Hardware and Software Component* 191
7.1.2 *As-Is Condition* 191
7.1.3 *Systems Description and Operational Concept* 191
7.1.4 *Systems and Support* 192
7.1.5 *Compliance* 192
7.1.6 *To-Be Condition* 193
7.1.7 *References* 193

7.1.8 Data Center Component *193*
7.1.9 As is Condition *193*
7.1.10 Systems Description and Operational Concept *193*
7.1.11 Production Network Diagram *194*
7.1.12 Systems and Support *195*
7.1.13 Facilities *195*
7.1.14 Technology Flashpoints *195*
7.1.15 Compliance *196*
7.1.16 Capabilities *196*
7.1.17 To Be Condition *197*
7.1.18 References *197*
7.2 COMMUNICATIONS SEGMENT 197
7.2.1 Voice Component *197*
7.2.2 Introduction *198*
7.2.3 As is Condition *198*
7.2.4 Systems Description and Operational Concept *199*
7.2.5 Production Network Diagram *200*

[redacted]

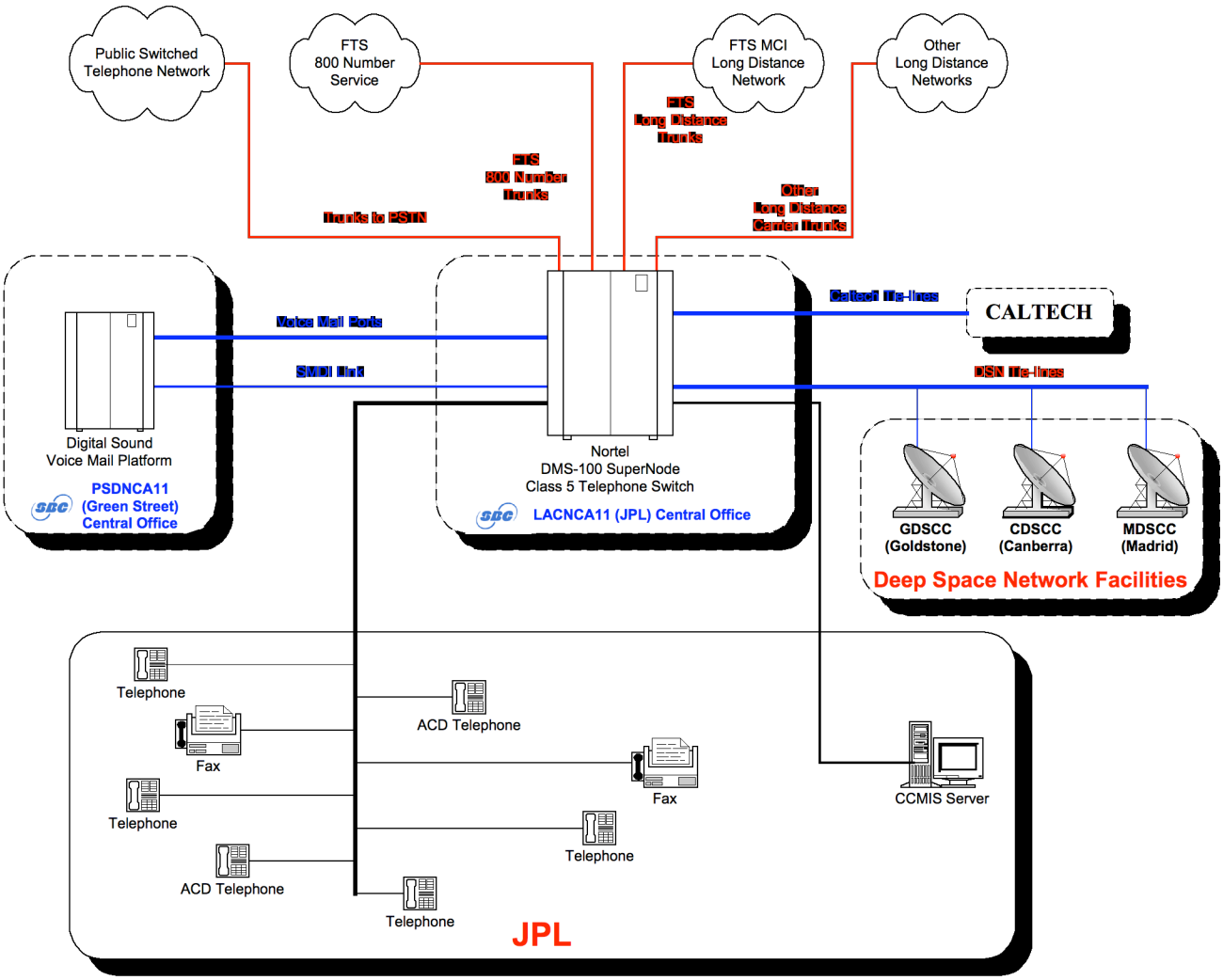

[redacted]

..... 200
7.2.6 Systems and Support *200*

7.2.7 *Facilities* ... 201
7.2.8 *Technology Flashpoints* ... 201
7.2.9 *Compliance* ... 201
7.2.10 *Capabilities* ... 201
7.2.11 *To Be Condition* ... 202
7.3 ELECTRONIC WORK ENVIRONMENT SEGMENT ... 202
7.3.1 *Messaging and Collaboration Component* ... 202
7.3.2 *As is Condition* ... 202
7.3.3 *Systems description and Operational Concept* ... 203
7.3.4 *Production Network Diagram* ... 205
7.3.5 *Facilities* ... 207
7.3.6 *Technology Flashpoints* ... 207
7.3.7 *Compliance* ... 207
7.3.8 *As is Condition* ... 208
7.3.9 *System Description and Operational Concept* ... 208
7.3.10 *Production Network Diagram* ... 210
7.3.11 *Systems and Support* ... 210
7.3.12 *Facilities* ... 211
7.3.13 *Technology Flash Points* ... 212
7.3.14 *Compliance* ... 212
7.3.15 *Capabilities* ... 212
7.3.16 *To Be Condition* ... 213
7.3.17 *Referenced Documents* ... 213
7.3.18 *As is Condition* ... 214
7.3.19 *Systems description and Operational Concept* ... 214
7.3.20 *Production Network Diagram* ... 215
7.3.21 *Systems and Support* ... 216
7.3.22 *Facilities* ... 216
7.3.23 *Technology Flashpoints* ... 217
7.3.24 *Compliance* ... 217
7.3.25 *Capabilities* ... 217
7.3.26 *To Be Condition* ... 217
7.3.27 *As is Condition* ... 218
7.3.28 *Systems description and Operational Concept* ... 218
7.3.29 *Systems and Support* ... 219
7.3.30 *Facilities* ... 219
7.3.31 *Technology Flashpoints* ... 220
7.3.32 *Compliance* ... 220
7.3.33 *Capabilities* ... 220
7.3.34 *To Be Condition* ... 220
7.3.35 *Public Web Component* ... 220
7.3.36 *As is Condition* ... 220
7.3.37 *Systems Description and Operational Concept* ... 221
7.3.38 *Production Network Diagram* ... 221
7.3.39 *Systems and Support* ... 221
7.3.40 *Facilities* ... 221
7.3.41 *Technology Flashpoints* ... 221
7.3.42 *Compliance* ... 221
7.3.43 *To Be Condition* ... 222

8 JOHNSON SPACE CENTER (JSC) ... 223

8.1 COMPUTING SERVICES SEGMENT ... 223
8.1.1 *Desktop Hardware and Software Component* ... 223
8.1.2 *As is Condition* ... 223
8.1.3 *Systems description and Operational Concept* ... 223
8.1.4 *Production Network Diagram* ... 224

JSC Institutional Network System

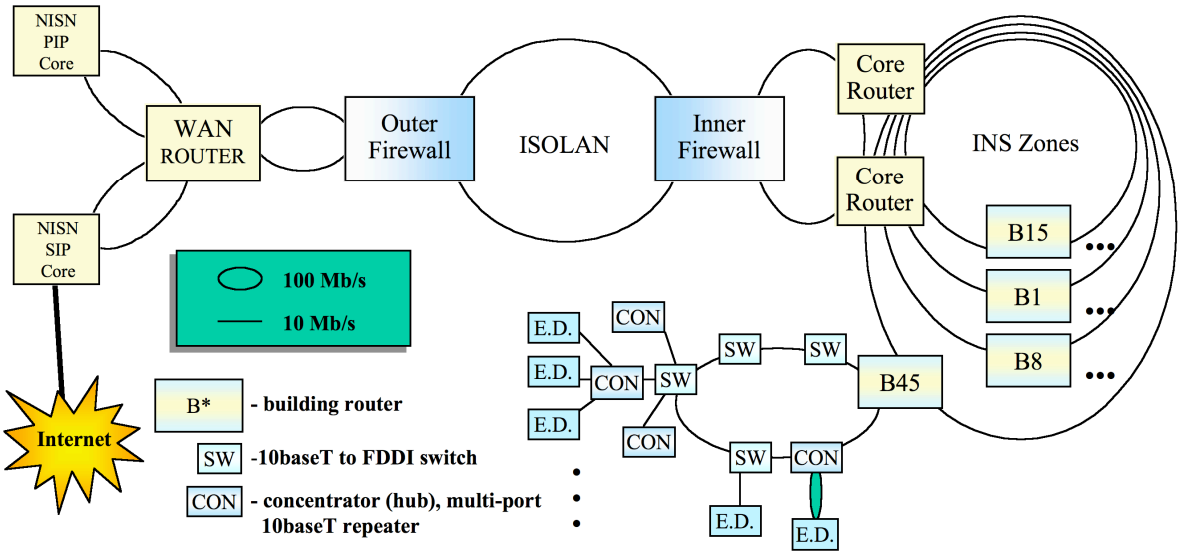

..... 224
8.1.5 Systems and Support *224*
8.1.6 Technology Flashpoints *224*
8.1.7 Compliance *225*
8.1.8 Capabilities *225*
8.1.9 To Be Condition *225*
8.1.10 Application Services Component *225*
8.1.11 As is Condition *225*
8.1.12 Systems Description and Operational Concept *226*
8.1.13 Systems and Support *226*
8.1.14 Facilities *227*
8.1.15 Technology Flashpoints *227*
8.1.16 Compliance *227*
8.1.17 Capabilities *227*
8.1.18 To Be Condition *228*
8.2 COMMUNICATIONS SEGMENT 228
8.2.1 Wide Area Network Component *228*
8.2.2 Local Area Network Component *228*
8.2.3 As is Condition *228*
8.2.4 Systems Description and Operational Concept *228*
8.2.5 Production Network Diagram *229*

JSC Institutional Network System

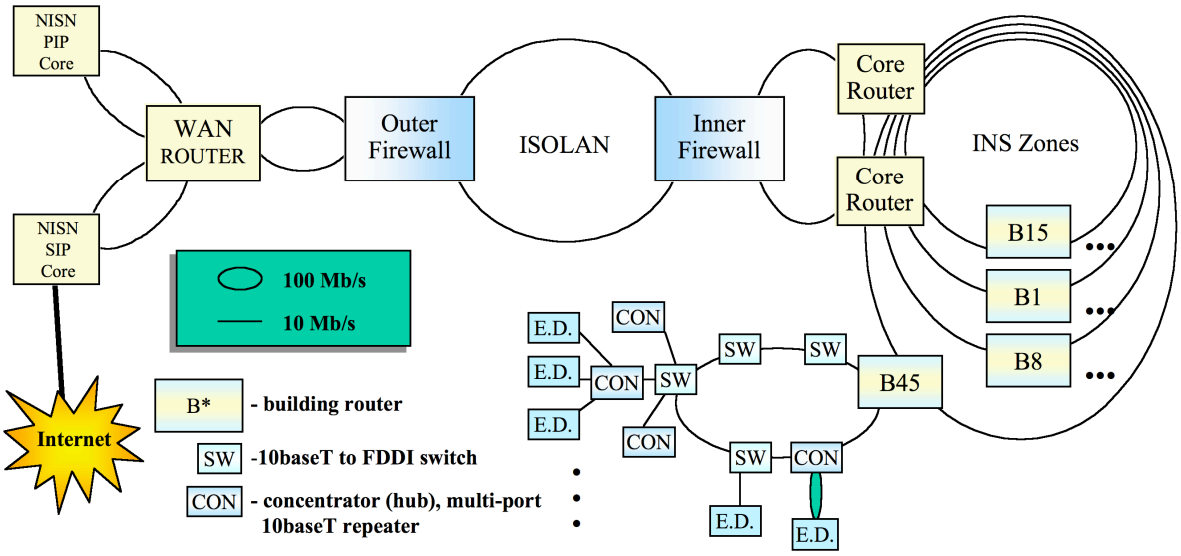

.....230
8.2.6 Systems and Support.....*230*
8.2.7 Facilities.....*231*
8.2.8 Technology Flashpoints.....*231*
8.2.9 Compliance.....*231*
8.2.10 Capabilities.....*232*
8.2.11 To Be Condition.....*232*
8.2.12 Voice Component.....*232*
8.2.13 As is Condition.....*232*
8.2.14 Production Network Diagram.....*233*

NASA
Johnson Space Center
EWSD Trunking Network

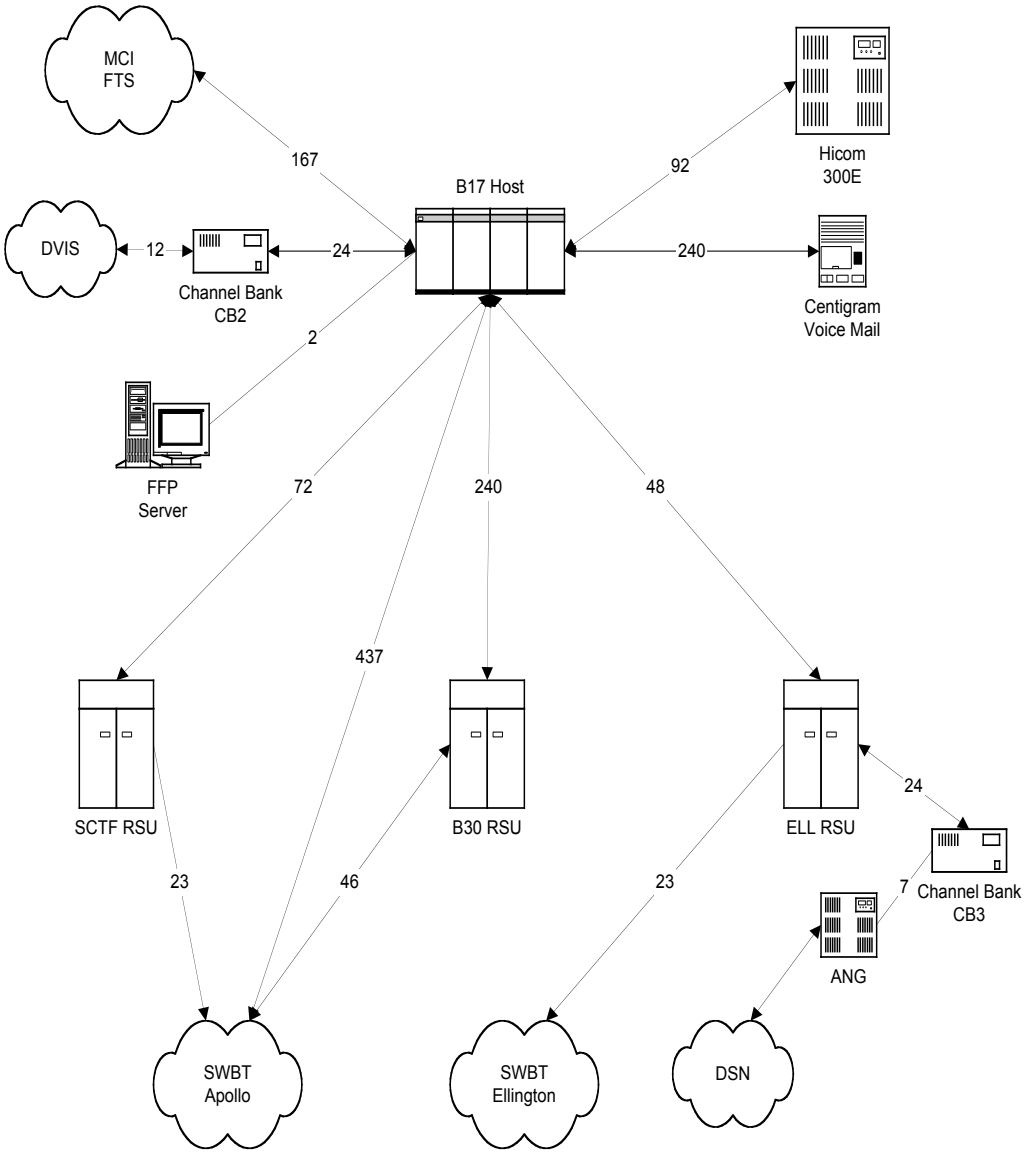

.....234
8.2.15 Facilities *235*
8.2.16 Technology Flashpoints *235*
8.2.17 Compliance *235*
8.2.18 Capabilities *235*
8.2.19 To Be Condition *235*
8.2.20 Video Component *235*
8.2.21 Systems description and Operational Concept *236*

8.2.22 *Production Network Diagram* 240
8.2.23 *Systems and Support* 241
8.2.24 *Technology Flashpoints* 241
8.2.25 *Compliance* 242
8.2.26 *To Be Condition* 242
8.3 ELECTRONIC WORK ENVIRONMENT SEGMENT 242
8.3.1 *Messaging and Collaboration Component* 242
8.3.2 *As is Condition* 242
8.3.3 *Systems description and Operational Concept* 242

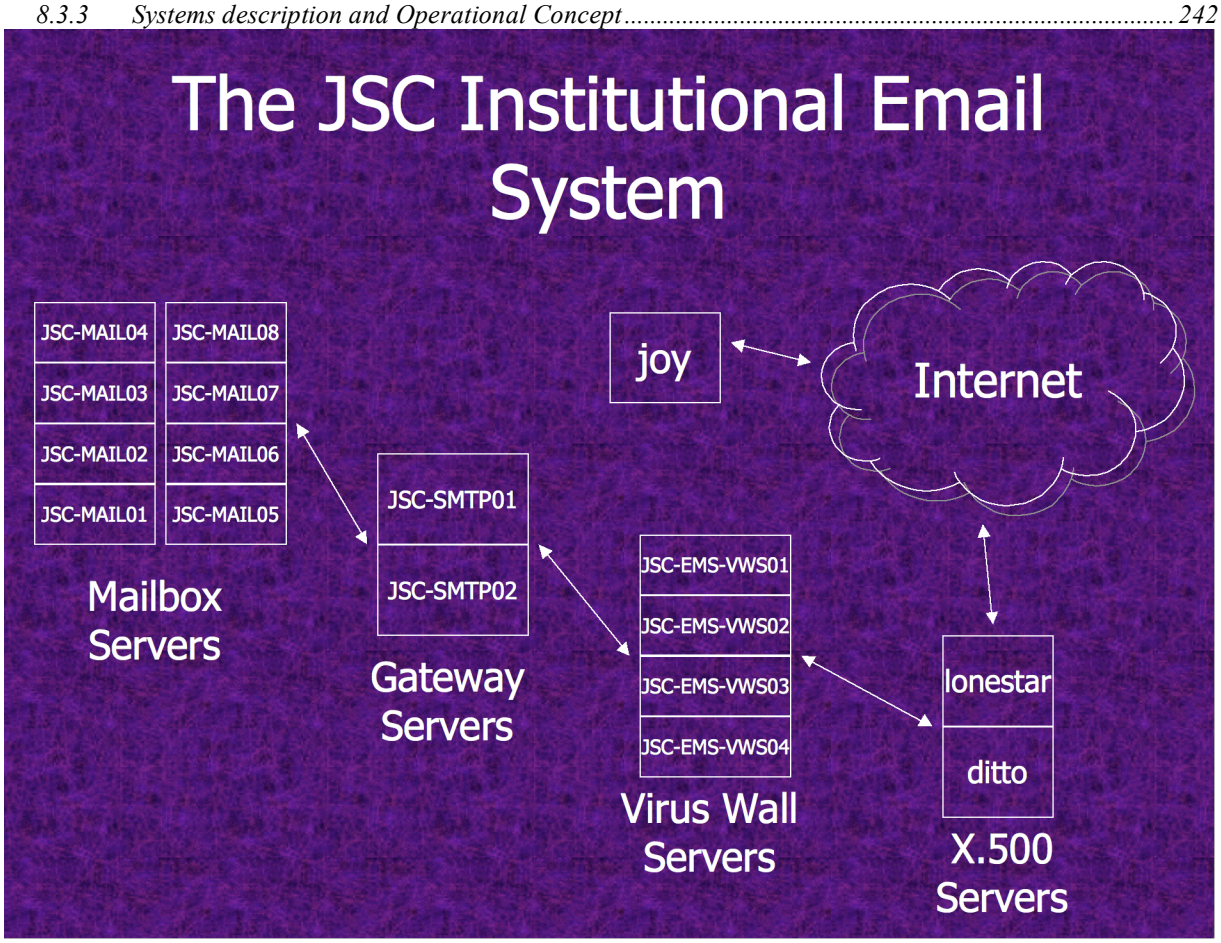

..... 245
8.3.4 *Systems and Support* 246
8.3.5 *Facilities* 247
8.3.6 *Compliance* 247
8.3.7 *Capabilities* 247
8.3.8 *To Be Condition* 247
8.3.9 *Public Web Component* 248
8.3.10 *As is Condition* 248
8.3.11 *Systems Description and Operational Concept* 248
8.3.12 *Production Network Diagram* 249
8.3.13 *Systems and Support* 250
8.3.14 *Facilities* 250
8.3.15 *Technology Flashpoints* 250
8.3.16 *Compliance* 251
8.3.17 *Capabilities* 251
8.3.18 *To Be Condition* 251

9 KENNEDY SPACE CENTER (KSC) 252

9.1 INTRODUCTION 252
9.1.1 Purpose *252*
9.2 COMPUTING SERVICES SEGMENT 252
9.2.1 Desktop Architecture Component *252*
9.2.2 As is Condition *252*
9.3 COMMUNICATIONS SEGMENT 253
9.3.1 Wide Area Network Component *253*
9.3.2 As is Condition *253*
9.3.3 Systems description and Operational Concept *253*
9.3.4 Facilities *253*
9.3.5 Local Area Network Component *253*
9.3.6 As is Condition *254*
9.3.7 Systems description and Operational Concept *254*
9.3.8 Systems and Support *258*
9.3.9 Facilities *258*
9.3.10 Technology Flashpoints *258*
9.3.11 Compliance *258*
9.3.12 Capabilities *259*
9.3.13 To Be Condition *259*
9.3.14 References *259*
9.3.15 Video Component *259*
9.3.16 As is Condition *259*
9.3.17 Voice Component *260*
9.3.18 As Is Condition *261*
9.3.19 System Description and Operational Concept *261*
9.3.20 Systems and Support *262*
9.3.21 Facilities *263*
9.3.22 Technology Flashpoints *263*
9.3.23 Compliance *263*
9.3.24 To Be Condition *263*
9.3.25 Messaging and Collaboration Component *263*
9.3.26 As is Condition *264*
9.3.27 Systems description and Operational Concept *264*
9.3.28 Systems and Support *264*
9.3.29 Facilities *265*
9.3.30 Technology Flashpoints *265*
9.3.31 Compliance *265*
9.3.32 Capabilities *265*
9.3.33 To Be Condition *266*

10 LANGLEY RESEARCH CENTER (LARC) 266

10.1 COMPUTING SERVICES SEGMENT 266
10.1.1 Desktop Hardware and Software Component *266*
10.1.2 As is Condition *266*
10.1.3 Systems description and Operational Concept *267*
10.1.4 Systems and Support *267*
10.1.5 Facilities *267*
10.1.6 Technology Flashpoints *267*
10.1.7 Compliance *268*
10.1.8 Capabilities *268*
10.1.9 To Be Condition *268*
10.1.10 References *268*
10.2 APPLICATION SERVICES COMPONENT 268
10.2.1 Introduction *268*
10.2.2 As is Condition *268*
10.2.3 Systems and Support *270*

10.2.4 To Be Condition *270*
10.3 DATA CENTER COMPONENT 270
10.3.1 As is Condition *270*
Network *271*
10.3.2 Production DMSS Diagram *272*
10.3.3 Systems and Support *272*
10.3.4 Facilities *272*
10.3.5 Technology Flashpoints *273*
10.3.6 Compliance *273*
10.3.7 Capabilities *273*
10.3.8 To Be Condition *273*
10.3.9 References *273*
10.4 COMMUNICATIONS SEGMENT 274
10.4.1 Wide Area Network Component *274*
10.4.2 As is Condition *274*
10.4.3 Systems description and Operational Concept *274*
10.4.4 Production Network Diagram *274*
10.4.5 Systems and Support *275*
10.4.6 Facilities *275*
10.4.7 Technology Flashpoints *275*
10.4.8 Compliance *275*
10.4.9 Capabilities *275*
10.4.10 To Be Condition *276*
10.4.11 Referenced Documents *276*
10.5 LOCAL AREA NETWORK COMPONENT 276
10.5.1 As is Condition *276*
10.5.2 Systems Description and Operational Concept *277*
10.5.3 Production Network Diagrams *278*
10.5.4 Systems and Support *279*
10.5.5 Facilities *280*
10.5.6 Technology Flashpoints *280*
10.5.7 Compliance *280*
10.5.8 Capabilities *280*
10.5.9 To Be Condition *281*
10.5.10 Referenced Documents *281*
10.6 VOICE COMPONENT 281
10.6.1 Telephone System Architecture *281*
10.6.2 As Is Condition *281*
10.6.3 System Description and Operational Concept *281*
10.6.4 Facilities *284*
10.6.5 Technology Flashpoints *284*
10.6.6 Compliance *285*
10.6.7 To Be Condition *285*
10.6.8 References *285*
10.7 VIDEO COMPONENT 285
10.7.1 As is Condition *285*
10.7.2 Systems description and Operational Concept *286*
10.7.3 Production Network Diagrams *286*
10.7.4 Systems and Support *289*
10.7.5 Facilities *290*
10.7.6 Technology Flashpoints *290*
10.7.7 Compliance *290*
10.7.8 Capabilities *290*
10.7.9 To Be Condition *290*
10.7.10 References *291*
10.8 ELECTRONIC WORK ENVIRONMENT SEGMENT 291

10.8.1 Messaging and Collaboration Component *291*
10.8.2 As is Condition *291*
10.8.3 Systems description and Operational Concept *291*
10.8.4 Production Network Diagram *291*

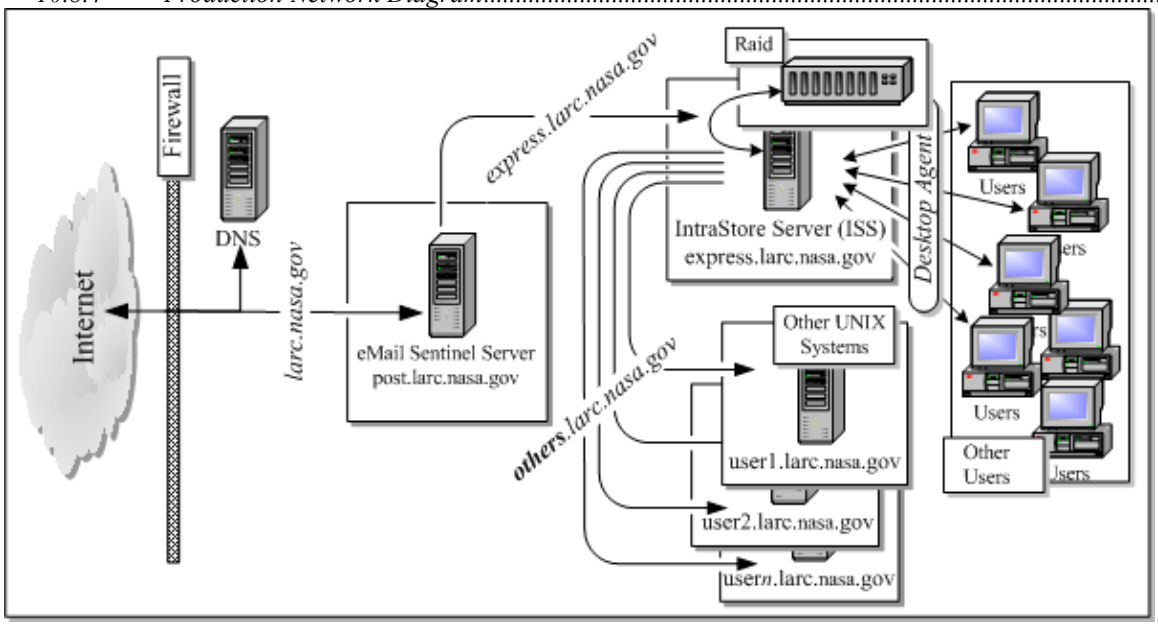

... 292
10.8.5 Systems and Support *292*
10.8.6 Facilities *292*
10.8.7 Technology Flashpoints *293*
10.8.8 Compliance *293*
10.8.9 Capabilities *293*
10.8.10 To Be Condition *293*

11 MARSHALL SPACE FLIGHT CENTER (MSFC) 294

11.1 COMPUTING SERVICES SEGMENT 294
11.1.1 Desktop Hardware and Software Component *294*
11.1.2 As is Condition *294*
11.1.3 Systems Description and Operational Concept *295*
11.1.4 Systems and Support *296*
11.1.5 Compliance *296*
11.1.6 To Be Condition *296*
11.1.7 Application Services Component *296*
11.1.8 Basic Client Components *297*
11.1.9 Digital Object Creation Applications *298*
11.1.10 Collaborative Applications *298*
11.1.11 Object Analysis Applications *299*
11.1.12 As is Condition *300*
11.1.13 Systems Description and Operational Concept *300*
11.1.14 Systems and Support *301*
11.1.15 Facilities *302*
11.1.16 Technology Flashpoints *302*
11.1.17 Compliance *302*
11.1.18 To Be Condition *302*
11.1.19 As is Condition *304*
11.1.20 Systems description and Operational Concept *304*
11.1.21 Production Network Diagram *304*
11.1.22 Systems and Support *305*
11.1.23 Facilities *305*

11.1.24 Technology Flashpoints *306*
11.1.25 Compliance *306*
11.1.26 Capabilities *306*
11.1.27 To Be Condition *306*
11.1.28 Data Center Component *307*
11.1.29 As is Condition *308*
11.1.30 Systems description and Operational Concept *308*
11.1.31 Facilities *308*
11.1.32 Technology Flashpoints *308*
11.2 COMMUNICATIONS SEGMENT 309
11.2.1 Local Area Network Component *309*
11.2.2 As is Condition *310*
11.2.3 Systems Description and Operational Concept *310*
11.2.4 Systems and Support *312*
11.2.5 Voice Component *313*
11.2.6 As is Condition *314*
11.2.7 Systems and Support *315*
11.2.8 Facilities *315*
11.2.9 Technology Flashpoints *315*
11.3 315
11.4 VIDEO COMPONENT 316
11.4.1 As is Condition/Systems description and Operational Concept/Capabilities *318*
11.4.2 Systems and Support *321*
11.4.3 Facilities *322*
11.4.4 Technology Flashpoints *322*
11.4.5 Compliance *322*
11.4.6 To Be Condition *322*
11.4.7 Referenced Documents *322*
11.5 ELECTRONIC WORK ENVIRONMENT SEGMENT 323
11.5.1 Messaging and Collaboration Component *323*
11.5.2 Information Broker *324*
11.5.3 Real-Time Collaboration *327*
11.5.4 As is Condition *327*
11.5.5 Systems description and Operational Concept *328*
11.5.6 Facilities *329*
11.5.7 Technology Flashpoints *329*
11.5.8 Compliance *329*
11.5.9 Capabilities *329*
11.6 PUBLIC WEB COMPONENT 329
11.6.1 As is Condition *330*
11.6.2 Systems description and Operational Concept *330*
11.6.3 Systems and Support *330*
11.6.4 Facilities *330*
11.6.5 Technology Flashpoints *330*
11.6.6 Compliance *331*
11.6.7 Capabilities *331*
11.6.8 To Be Condition *331*

12 JOHN C. STENNIS SPACE CENTER (SSC) 332

12.1 COMPUTING SERVICES SEGMENT 332
12.1.1 Desktop Hardware & Software Component *332*
12.1.2 As Is Condition *332*
12.1.3 Systems Description and Operational Concept *332*
12.1.4 Systems and Support *333*
12.1.5 Facilities *333*
12.1.6 Technology Flashpoints *334*

12.1.7 Compliance *334*
12.1.8 Capabilities *334*
12.2 APPLICATION SERVICES COMPONENT 335
12.2.1 As Is Condition *335*
12.2.2 Systems Description and Operational Concept *336*
12.2.3 Systems and Support *336*
12.2.4 Facilities *336*
12.2.5 Technology Flashpoints *337*
- *Compliance* *337*
12.2.6 To Be Condition *337*
12.3 DATA CENTER COMPONENT 337
12.3.1 As Is Condition *338*
12.3.2 Systems Description and Operational Concept *338*
12.3.3 Production Network Diagrams *339*
12.3.4 Systems and Support *342*
12.3.5 Facilities *342*
12.3.6 Technology Flashpoints *342*
12.3.7 Compliance *343*
12.3.8 Capabilities *343*
12.3.9 To Be Condition *345*
12.4 COMMUNICATIONS SEGMENT 345
12.4.1 Wide Area Network Component *345*
12.4.2 As Is Condition *346*
- *Systems Description and Operational Concept* *347*
12.4.3 Production Network Diagram *348*
12.4.4 Systems and Support *348*
12.4.5 Facilities *349*
12.4.6 Technology Flashpoints *349*
12.4.7 To Be Condition *350*
12.5 LOCAL AREA NETWORK COMPONENT 350
12.5.1 As Is Condition *351*
12.5.2 Systems Description and Operational Concept *351*
12.5.3 Production Network Diagram *351*
12.5.4 Systems and Support *354*
12.5.5 Facilities *354*
12.5.6 Technology Flashpoints *354*
12.5.7 Compliance *355*
12.5.8 Capabilities *355*
12.5.9 To Be Condition *356*
12.6 VOICE COMPONENT 356
12.6.1 As Is Condition *357*
12.6.2 Systems and Support *360*
12.6.3 Facilities *360*
12.6.4 Technology Flashpoints *360*
12.6.5 Compliance *361*
12.6.6 Capabilities *361*
12.6.7 To Be Condition *362*
12.7 VIDEO COMPONENT 362
12.7.1 As Is Condition *363*
12.7.2 Systems Description and Operational Concept *364*
12.7.3 Production Network Diagram *367*
12.7.4 Systems and Support *368*
12.7.5 Facilities *369*
12.7.6 Technology Flashpoints *370*
12.7.7 Compliance *370*
12.7.8 Capabilities *370*

12.7.9 To Be Condition *371*
12.8 ELECTRONIC WORK ENVIRONMENT SEGMENT 373
12.8.1 Messaging and Collaboration Component *373*
12.8.2 As Is Condition *373*
12.8.3 Systems Description and Operational Concept *373*
12.8.4 Systems and Support *374*
12.8.5 Facilities *374*
12.8.6 Technology Flashpoints *374*
12.8.7 Compliance *374*
12.8.8 To Be Condition *375*
12.9 PUBLIC WEB COMPONENT 375
12.9.1 As Is Condition *375*
12.9.2 Systems Description and Operational Concept *375*
12.9.3 Technology Flashpoints *376*
12.9.4 Compliance *376*
12.9.5 To Be Condition *376*
12.9.6 References *376*

Figure References

FIGURE 1 16
FIGURE 2 20
FIGURE 3 23
FIGURE 4 26
FIGURE 5 29
FIGURE 6 32
FIGURE 2 32
FIGURE 7 35
FIGURE 8 38
FIGURE 9 39
FIGURE 3 43
FIGURE 10 43
FIGURE 11 70
FIGURE 13 101
FIGURE 14 105
FIGURE 15 118
FIGURE 16 119
FIGURE 17 123
FIGURE 18 124
FIGURE 19 128
FIGURE 20 129
FIGURE 21 130
FIGURE 22 131
FIGURE 23 132
FIGURE 24 139
FIGURE 25 149
FIGURE 26 166
FIGURE 27 172
FIGURE 28 180
FIGURE 29 180
FIGURE 30 184
FIGURE 31 187
FIGURE 32 195
FIGURE 33 200
FIGURE 34 205
FIGURE 36 209
FIGURE 37 210
FIGURE 38 214
FIGURE 39 216
FIGURE 40 219
FIGURE 41 221
FIGURE 42 224
FIGURE 43 230
FIGURE 44 233
FIGURE 45 240
FIGURE 46 244
FIGURE 47 245
FIGURE 48 245
FIGURE 49 249
FIGURE 50 256
FIGURE 51 257
FIGURE 52 260
FIGURE 53 272

FIGURE 54 274
FIGURE 55 278
FIGURE 56 279
FIGURE 57 286
FIGURE 58 288
FIGURE 59 289
FIGURE 60 292
FIGURE 61 303
FIGURE 62 305
FIGURE 63 328
FIGURE 64 339
FIGURE 65 341
FIGURE 66 348
FIGURE 67 364
FIGURE 68 367
FIGURE 69 372

Table References

FIGURE 2 32
FIGURE 3 43
TABLE 1 50
TABLE 2 62
TABLE 3 63
TABLE 4 108
TABLE 5 110
TABLE 6 113
TABLE 7 135
TABLE 8 140
TABLE 9 140
TABLE 10 141
TABLE 11 142
TABLE 12 143
TABLE 13 146
TABLE 14 150
TABLE 15 151
TABLE 16 161
TABLE 17 162
TABLE 18 162
TABLE 19 163
TABLE 20 163
TABLE 21 168
TABLE 22 168
TABLE 23 169
TABLE 24 169
TABLE 25 190
TABLE 26 207
TABLE 27 294
TABLE 28 300
TABLE 29 358

1 Introduction

This Volume of the NASA Enterprise Architecture gives an overview of the current operational state of the IT infrastructure at the different NASA Centers.

The NASA Integrated Information Infrastructure Program focuses on taking what NASA has in place, built and managed separately by individual Centers over several decades, and molding those systems into an integrated infrastructure aligned to mission and business needs. As computing, networking and communications technologies have advanced, Information Technology has remained decentralized within NASA with each Center having its own "as is" architecture optimized locally to support individual program/project needs, rather than at the agency level.

The President's Management Agenda (PMA) clearly identifies E-Government as a critical success factor for all Federal Agencies. E-Government requires Agencies to use IT to transform their operations in ways that improve effectiveness, efficiency, and service delivery. The principles of E-Government include having market-based, result-oriented, citizen-centered IT initiatives that unify business lines within and across agencies while at the same time simplifying business processes.

As E-Government initiatives progress, the need to share information and tools across the agency and the entire Federal government continue to grow, and the need for a unified IT infrastructure becomes even more critical.

To facilitate the implementation of the E-Government principles, NASA must:

> Transform its IT infrastructure to provide a secure and efficient interface between: NASA Centers, NASA and other government agencies, application service providers, partners and vendors, and the public.
>
> Be prepared with an IT infrastructure that provides a single interface and eliminates the need for application owners and service providers to negotiate multiple agreements and maintain costly separate systems.
>
> Remove the barriers to deployment of agency-wide systems and increase its security posture.

The NASA Integrated Information Infrastructure Program is the NASA strategy for managing the transformation of the Agency's IT infrastructure from a collection of eleven loosely connected architectures and multiple site-dependent systems to a single enterprise architecture providing Agency-wide IT infrastructure services (a OneNASA environment). This OneNASA IT environment is designed to support NASA's Strategic Plan and the President's expanding E-Government initiative. The Program has at its core the following objectives:

> Managing the NASA IT infrastructure with an integrated NASA Enterprise Architecture

Providing an infrastructure that can evolve and adapt to emerging technologies and services models

Providing information tools and services that enhance programs and management

Emphasizing a customer focus in providing common IT infrastructure services across NASA

Enabling effective and efficient integration with Federal E-Government applications

Within NASA, Information Technology has always been a critical enabling element of program development and management, as well as a pathway for improving business functions. Because IT is crucial to achieving NASA's strategic goals, IT projects must be aligned with the Agency's strategic direction and business plans in order to realize the value of each investment and take advantage of the opportunities that new information technologies promise.

Not only must there be alignment with the agency's mission, program, and business needs, there must be alignment with government-wide architectures and standards, as well as alignment with our strategic and industry partners. This provides for greater interoperability, efficiencies, and quality of service. It is essential that IT projects are planned and managed in a manner that integrates with mainstream Agency processes, including program/project management and budget processes.

The Bush Administration has taken an active role in improving the management of IT resources across the government. The President's Management Agenda provides the framework for improved management and coordination of IT and sets forth a number of actions to include development of the Federal Enterprise Architecture, an evaluation process for IT activities, and a budget process that provides rigorous standards for determining the merits of IT investments.

Among the many other externally generated laws, policies, standards and guidance, the following are key drivers of the direction of NASA's IT infrastructure:

The Administration
- President's Management Agenda
- Agency Scorecard System

Legislative Mandates
- Chief Financial Officers Act of 1990
- Government Performance and Results Act of 1993
- Federal Acquisition Streamlining Act of 1994
- Paperwork Reduction Act of 1995
- Clinger-Cohen Act of 1996
- Government Paperwork Elimination Act of 1998
- Electronic Government Act of 2002

- Federal Information Security Management Act of 2002 (FISMA)

Government and Industry standards
- National Institute for Standards and Technology (NIST)
- HyperText Markup Language (HTML), Extensible Markup Language (XML), JAVA, Web services, etc.
- Secure Socket Layer (SSL), Public Key Infrastructure (PKI), etc.

The agency operating model now requires increased capability to work across centers, generating requirements that, by their nature, are best met at the agency level. The global shift in how information and knowledge is generated, used and managed, when coupled with the competition for limited budgets, dictates a more strategic approach to providing information infrastructure services across NASA. In addition to the various external drivers, there are a number of NASA-specific drivers for approaching IT systems more strategically. These include:

- OneNASA (Using IT as an integrating system and provider of common tools)
- Fixing and improving NASA's IT infrastructure to meet the NASA Vision and Strategic Plan
- Positioning the IT infrastructure to support Agency-wide applications such as Integrated Financial Management (IFM)
- Ensuring availability of integrated services across Centers
- Providing greater knowledge management and information sharing
- Supporting a robust collaborative program and management environment
- Achieving reduced cost of services to the customers (programs, projects, and General and Administrative users)
- Improving security
- And most importantly, delivering consistent and quality services to customers

Within NASA, Information Technology has long been a critical enabler of its mission and program management, as well as a pathway for improving business functions. Because IT is crucial to achieving NASA's strategic goals, IT projects must be aligned with the agency's strategic direction and business plans in order to realize the value of each investment and take advantage of the opportunities that new information technologies promise.

Not only must there be alignment with the agency's mission, program and business needs, there also must be alignment with government-wide architectures, as well as alignment with strategic partners and with industry and government standards that provide for greater interoperability, efficiencies, and quality of service. It is essential that IT projects are planned and managed in a manner that integrates with mainstream agency processes, including program/project management and budget processes.

The NASA Integrated Information Infrastructure Program provides the means and services important to the accomplishment of the mission goals set out in NASA's 2003 Strategic Plan. The Strategic Plan identifies Information Technology in two of five implementing strategies (IS) that provide the framework under which NASA conducts its business.

IS-1. Achieve management and institutional excellence comparable to NASA's technical

excellence.

NASA is a leader in establishing electronic tools for information exchange. Along with other agencies, NASA is enhancing the way it uses these tools, not just for exchanging information among its employees and contractors, but also as an integral part of the way to plan and manage the results. NASA is simplifying its Internet presence to give the public easy access to exciting science and technology from NASA programs.

Beginning in early 2003, NASA will provide an integrated and user-friendly NASA-wide Internet portal that will provide improved public access to NASA Mission results and other products, improved visibility into NASA plans and programs, and enhanced communication among NASA employees and contractors.

IS-2. Demonstrate NASA leadership in the use of information technologies.

NASA is, first and foremost, an agency of technical and scientific knowledge. All of its science, engineering, and technology efforts are focused on the generation of knowledge —about our planet and how we can best live upon it, about the universe around us, and about life in the cosmos. The management, dissemination, and preservation of knowledge within NASA are critical to the effectiveness of our programs, and the distribution to the public of clear and timely information will ultimately define our value to the Nation.

Modern tools and techniques have dramatically increased the amount of information that NASA programs can produce, and they have greatly improved our ability to analyze and interpret this information to create a body of knowledge. But with these improvements comes the challenge of managing this vast amount of information in a coherent and cost-effective manner. With 15 percent of NASA costs devoted to information technologies and information management, it is imperative that we plan and leverage our information technology investments.

By 2005, NASA plans to achieve the following objectives in support of Implementation Strategy 2 of the NASA Strategic Plan:

- Provide all NASA operations with secure, highly reliable, interoperable information systems
- Enable NASA people to communicate across an integrated, low-cost information technology infrastructure
- Design and operate a One NASA network to improve organizational interactions and foster improved collaboration and sharing of accumulated NASA knowledge assets
- Establish systems to deliver superior information services to consumers, educators, students, researchers, and the general public, as well as to Government agencies, NASA contractors and suppliers, and other businesses.

- The following describes specific contributions to four of the five key areas of the President's Management Agenda:

Strategic Management of Human Capital.

The component elements of the NASA Integrated Information Infrastructure Program will enable more effective deployment of the workforce by eliminating overlapping responsibilities and duplicate functions through the centralized management of infrastructure systems. Rather than having eleven or more different systems, the NASA Integrated Information Infrastructure Program will put into place centrally managed systems for key infrastructure components, reducing the time required for systems administration and management. Importantly, many of the components of this program substantially reduce the amount of time individual users must spend to maintain their accounts.

Improved Financial Performance

NASA has substantially strengthened its capital planning and investment program by:

- Actively employing an executive review structure
- Analyzing capital investments as a portfolio
- Developing business cases for each proposed project within the portfolio
- Ensuring full life cycle analysis
- Using the NASA Program/Project Management system (NPG 7120.5B) to manage and monitor all capital projects to ensure that cost, schedule, and performance goals are met.

Expanded Electronic Government

NASA has developed an enterprise architecture and governance model derived from the Federal Enterprise Architecture, thereby improving the agency's interoperability with other agencies. A key element of this strategy has been the assessment of security threats and vulnerabilities to ensure security, continuity of operations and protection of privacy. Activities that support e-Gov and expanded electronic government include:

- Deployment of a public NASA Portal
- Deployment of open standards to include XML
- Deployment of web-based applications

Budget and Performance Integration

A principal first customer for a strengthened IT infrastructure is the NASA Integrated Financial Management (IFM) Program. Agency-wide applications will continue to have requirements similar to those identified in the deployment of IFM, the first true Agency-wide application. The IT infrastructure will address several "flash points" that create a risk to successful implementation of IFM which will directly benefit future agency and government-wide applications as they are deployed.

Because the NASA Integrated Information Infrastructure Program is comprised of numerous operational functions and activities decentralized across the Centers and further decentralized within a Center, there is no practical way to identify all components and sufficiently specify requirements to issue an RFI or RFP. The NASA Integrated Information Infrastructure Program will bring these elements together for the first time and permit the development of future alternatives and an informed decision.

The vision, goals, and objectives of the NASA Integrated Information Infrastructure Program focus on supporting the mission functions of NASA and improving the efficiency and cost effectiveness of agency computing technology infrastructure services. Although the NASA Integrated Information Infrastructure Program requires a near-term investment, it will increase the cost-effectiveness of the agency as a whole by enabling reliable and capable IT systems and, correspondingly, improving the productivity of end-users. The upgraded and enhanced infrastructure will not only allow end-users to complete their work faster, it will reduce time spent on self-help, peer support and help desk calls to solve distributed computing infrastructure problems.

Most importantly, this program will allow for the deployment of agency-wide applications, greater collaboration, and the ability to work across sites. Currently, NASA Centers independently devise infrastructure solutions specific to their geographic location. The result is often multiple, incompatible solutions, independently developed, but all with the same expected outcomes. As a consequence, NASA employees must have separate accounts and access requirements, if allowed access at all, as they travel across sites. This investment will provide a common network backbone and common solutions for such basic services as account management, identify assurance, common email, etc. Cost savings are realized by "building once" and implementing across the agency and the use of commercial, COTS-based solutions and services. Value to the government includes cost efficiencies and timely delivery of services based on common policy framework, aggregated procurement, and shared services.

The NASA Integrated Information Infrastructure Program brings together a multitude of essential, integrated systems and intra-agency networks that, together, enable and support NASA's programs and missions. The NASA Integrated Information Infrastructure Program encompasses the following elements of the IT infrastructure: security environment, desktops and applications, communication networks (i.e., intra-Agency LAN, MAN, WAN, Voice and Video), electronic messaging and web services. Therefore, the NASA Integrated Information Infrastructure Program interfaces with front office assets, network assets and back office assets.

Outsourcing the IT infrastructure is impractical in the near term because the infrastructure is so widely dispersed and managed in so many different ways across the agency that it is not possible to develop a thorough inventory for purposes of developing requirements. Lessons-learned from NASA's desktop outsourcing program (ODIN), GSA's desktop outsourcing program and the Navy Marine Corps Intranet program all point to the need to have a good understanding of the existing end-to-end infrastructure before attempting to outsource.

The selected alternative, a Federated Strategy, institutes a central approach to IT infrastructure

services and provides a path toward greater consolidation and potential future outsourcing. In the near term, some projects under the NASA Integrated Information Infrastructure Program will be consolidated -- centrally managed and provisioned. In other cases, activities will be centrally managed and locally provisioned and in still other cases locally managed and provisioned. Through this approach NASA can consolidate much of the infrastructure, and manage the entire infrastructure under a disciplined program management process. Using this approach NASA will bring together like elements of the infrastructure, evaluate the scope of services required under a centralized management approach, and develop a suitable baseline for examining other options. This will enable NASA to make an informed decision at a later time on whether to outsource major segments or all of the infrastructure services.

Of course, many of the individual infrastructure component services today are contracted or outsourced. However, these contracted efforts are embedded in many different contracts and it will take considerable effort to identify the contracts and extract the terms for each of these efforts.

The identification of alternatives was driven by the current operational state of the IT infrastructure. Because the existing infrastructure is embodied within eleven different "as is" architectures and often decentralized even within a geographic site, there is no suitable baseline for evaluating alternatives. A major objective of the NASA Integrated Information Infrastructure Program is to bring together elements of the IT infrastructure into logical clusters or service areas so that more informed decisions can be made. Aside from the obvious cost savings, the drive for a more consolidated or federated management approach is driven by today's business and mission systems that demand standards-based interfaces within the agency, and with other agencies, partners and vendors, as well as the public.

Countless studies, along with such initiatives as e-Gov, point to the need for seamless interfaces for doing business in an electronic environment. Today, NASA must "cobble" together its infrastructure to participate in these systems, but only at higher cost and reduced effectiveness.

Following is the "as-is" NASA Enterprise Architecture for the individual NASA Centers.

2 Definitions

The NASA Enterprise Architecture clusters operational activities and improvement actions into three service areas. Descriptions of each service area and the new components within each service area are described below.

2.1.1 Communication Services

The Communications Services component of the Program includes the agency's voice, data, and video network infrastructure, exclusive of any infrastructure elements that are unique to mission operations.

2.1.2 Wide Area Network

This project consists of a set of wide area networks that support production services, as well as services provided by several Internet Service Providers (ISPs). Today, ISP services have been procured by several Centers as an alternative for direct access to the Internet.

An independent economic analysis by Tecolote Research, Inc., examined four cases for providing Wide Area Network capabilities to NASA, including maintaining the "as is" approach. The most economical case is to replace/upgrade the existing network. This effort is one of the near term projects planned within this program. Assuming a transition period beginning in May 2003, the breakeven point is achieved in FY08.

2.1.3 Local Area Network

The LAN component incorporates all IT investments required to provide networking services within a building, campus, data center or Center, including hardware, software, and services (including wireless LANs, remote access, Domain naming services, network management, X500/directory services).

The operational state of Local Area Network services varies greatly from Center-to-Center. Since this capability evolved over time, there are a diverse set of LAN architectures across the Agency. In addition, service to the desktop varies from shared 10 megabit connections to dedicated gigabit connections. While there are no specific agency-wide projects identified in this area at this time, the development of a standard LAN architecture has begun and most Centers have LAN upgrade projects progressing as funding permits to provide 100 megabits to the desktop.

2.1.4 Voice

The Voice component includes all elements that provide voice services to users including hardware, software, services and communications that are not provided by NASA WANs.

The voice element includes local and long distance telephone services, cell phone service, satellite phone service, teleconferencing, voice mail, fax, and ancillary services such as two way radios, emergency warning systems, and public address systems. Long Distance Service (LDS), 800 numbers, and calling cards are obtained from the GSA FTS2001 contract. Several Centers have upgraded their voice network infrastructure in recent years. There are no specific agency-wide projects identified in this area at this time; however, as the technology matures, the use of Voice over Internet Protocol (VoIP) will potentially enable the convergence of the voice and data infrastructures.

2.1.5 Video

This category includes investments required to support video and video distribution and video conferencing services used by Agency or Bureau to include hardware, software and support services - not including LAN or WAN.
Video services include Video Teleconferencing Systems (ViTS), digital video production equipment and facilities, video distribution systems and video repositories. While there are no specific agency-wide projects identified in this area at this time, it is expected that as networks are upgraded and desktop videoconferencing becomes more widely available, that there will be an opportunity for convergence with the voice and data infrastructure.

2.1.6 Computing Services

Included in this service area are desktop hardware and software service, application services, and those services provided by agency or Center multi-purpose data centers. Although there are a number of ongoing operational activities within this service area, there are no new agency-wide projects proposed at this time. This service area incorporates ODIN and NACC, activities independently managed in the past.

2.1.7 Desktop Hardware and Software

Desktop computing services to users include all general purpose, desktop computing hardware and software (OS, applications and utilities) components and services (including design, build, operations, support and maintenance services) Includes peripherals/printers. Not included is email and calendaring client & servers or desktops whose primary uses are mission specific. Includes multipurpose help desks.

2.1.8 Application Services

Application services provide an end service to end-users. Applications services include the development, operations and maintenance of applications that are not desktop services. Included are IT investments in hardware (not a part of a data center), software and services required to provide application services remote from a desktop and not provided by a data center. This includes design, development, help and other support, operations and maintenance.

2.1.9 Data Center

A data center is a collection of IT hardware and software used for multiple purposes. These resources are usually funded and operated as a shared resource with management dedicated to operating the center. Mass storage systems are normally included as a data center unless the mass storage is integrated into some other IT facility. Included is data storage (digital data storage services, including hardware, software and services). Public Web hosting services are not included.

2.1.10 Electronic Work Environment

The Electronic Work Environment is a set of inter-related efforts that provide the NASA workforce with tools that improve the ability to work together and coordinate with NASA partners across all disciplines. This service area includes messaging systems that provide email and/or calendaring, collaboration tools that support virtual teaming, document and records management, and tools like XML that support and promote data interoperability across NASA, other agencies, and NASA partners.

2.1.11 Messaging and Collaboration

This component includes IT investments to provide Email, instant messaging, and collaborative tools. Two key near term elements are e-Presence and eXtensible Markup Language (XML).

2.1.12 E-Presence

Historically, NASA Headquarters, the Centers, and their satellite facilities have taken a "site specific" approach to the provision of electronic messaging services. As a result, the NASA electronic messaging environment today is a collection of diverse products and system implementations, with capabilities that vary from site to site. The objective of the ePresence initiative is to increase collaboration across the agency by providing a common electronic messaging system and a set of common collaborative tools to support virtual teams. The messaging component of this initiative will complete a pilot activity in the first quarter of FY04 involving two solutions chosen for the pilot through a competitive process. If the pilot is successful, a project plan will be developed for agency-wide implementation.

The virtual teaming element is nearing completion of the first year of a pilot activity involving the two general categories of tools that support virtual team collaboration – those that enable virtual team meetings and those that provide a virtual team workspace. The WebEx tool for virtual team meetings has proven very successful and its use in a pilot mode will be continued through July 2004, at which time it will be transitioned to an operational environment on a fee for service basis. The tool piloted for virtual team workspace support has been more difficult to integrate into the normal team work processes, and investigation of the tools providing this capability will continue.

2.1.13 XML

As one of the Program's near term initiatives, the XML initiative supports data interoperability across NASA, other agencies, and NASA partners. XML is a family of standards and technologies that addresses the issue of achieving data integration. In the past, the solution was largely to develop central databases formed out of back-end legacy systems. Because of the complexity of such systems, little was gained from that approach. More recently, distributed databases and various middleware packages addressed distributed heterogeneous data. However, the time to develop the solution often seemed endless and the cost quite high.

XML offers a better, lower-cost alternative. XML has become a universal, vocabulary-based standard that uses a set of rules, guidelines and conventions for designing text formats in a way that produces Web-enabled files that are easy to produce and read. Systems based on current XML formats are able to deliver data in a manner all platforms can readily interpret, transfer, and store. Because of its universality, OMB has dictated that all e-Gov Initiatives should define and implement an approach for using XML. Where new developments or re-developments are pursued, XML must be considered as the default format for highly structured data as well as relatively less highly structured information, particularly at the User Interface layer but also at the Enterprise Repositories level as well. For legacy repositories that do not directly support XML, legacy to XML mapping and data transformation is to be explored for supporting interoperability across the data architecture. Use of voice XML (VXML) will be considered at the user interface level, especially for Government to Citizen (G2C) initiatives.

NASA has entered into an agreement with DOD/DISA to use their XML Registry to store NASA XML information. This project will advance the implementation of XML standards across NASA. The goals of the project are to:
"Future proof" information against periodic technology change, facilitate integration and promote collaboration.
Reduce the cost of integrating data, replication of data and warehousing (where these are clearly needed).
Allow communication between applications running on different Web servers

2.1.14 WEB

This component includes Center and agency-wide web development and hosting services focused on providing web access to information. The immediate focus has been on information provided to the citizen, with the most significant activity being the deployment of the OneNASA portal. The OneNASA Portal is intended to provide the public with a single point of entry to NASA's web environment, providing the audience with an easy way to navigate through NASA's public web content without knowledge of NASA organizational structure. The portal and its associated content management tools will enable the presentation of information in a way that reflects a consistent look and feel and will help ensure consistency and quality of the information presented.

Several Centers have deployed Center portals that are geared more toward providing easy access to information and tools intended for the workforce specific to their Center. Deployment of an "InsideNASA" portal to provide a similar capability, but from an agency-wide workforce perspective, is currently under consideration.

3 Ames Research Center (ARC)

3.1 General Introduction

NASA Ames Research Center (ARC) is a large government owned Research and Development facility in the San Francisco Bay region. This facility conducts research in Space Science, Life Science, Information Science, and Aeronautics. In addition to research, it is a center for applied development of applications, tools, and processes for these disciplines.

There are 4000+ staff housed in approximately 130,000 square meters of R&D space on 234 acres of land.

The primary Information Technology (IT) work of the facility is broken into two relatively distinct Services:

Institutional IT
R&D IT

Institutional IT includes the physical infrastructure, systems, resources, and processes used to support the operation of the Center on a daily basis and to provide common services to all employees, projects, and programs. These services are primarily centralized in terms of management and control, with facilities located throughout the Center. These services are detailed in the rest of this document.

R&D IT includes the IT components utilized by programs, projects, and independent researchers that is used specifically to support a particular program, project, line of research, or experiment. These IT functions are distributed throughout the facility and are developed, maintained, and controlled by and for the particular research effort at the local office.

This infrastructure of hardware, software, applications, and tools directly support NASA's Aeronautics Technologies, and Mission and Science Measurement Technologies.

3.2 Computing Services Segment

3.2.1 Desktop Hardware & Software Component

Desktop services are provided using two models:

Outsourced seats utilizing the ODIN contract
Local system administrators supporting Program and Project systems on government owned equipment

The process and skill sets required for providing support are similar, but the nature of the desktops differ significantly. Under the ODIN model, a standard load (defined by the NASA Technical Standard 2804F) is created as an entity and loaded onto the Contractor owned equipment and then deployed to the Center users. The other model is applied to government owned equipment that is used to support programs and projects and may not lend itself to the 'one size fits all' approach. In these cases, the build is architected for specific needs of the researcher.

3.2.2 As Is Condition

ARC has a population of approximately 5000 active Civil Service (CS) and Contractor desktop computers. The approximate overall distribution of OS types is:

Windows (various versions)	50%
Macintosh (various versions)	30%
Unix/Linux (various versions)	20%

Of these desktops, about 1900 are supporting institutional activities. The breakdown of these computers is

Windows (various versions)	40%
Macintosh (various versions)	60%
Unix/Linux (various versions)	00%

The diversity of desktops directly impacts the ability to field common client tools. To address this diversity ARC uses html and associated technologies (JAVA, XML, etc) as the preferred software language for client applications.

3.2.3 Systems Description and Operational Concept

There are two models for operation of client software:

Installation on individual desktops
Server side applications with Web Browser access

In terms of the application architecture, all mainframe applications are supported by a single client side application (TN 3270 emulation); while other applications are split between server side computing (Web Browser access) and access via 'heavy' clients. The heavy clients are developed (by the vendors in most cases) for each specific OS.

There are 37 separate desktop applications supported at ARC. These are:

3.2.4 Desktop Productivity Tools

MS Word
MS Excel
MS PowerPoint
Eudora Pro
Netscape Communicator
Internet Explorer

Internet SW & Utilities
Bundled WIN2000 products)
QuickTime
Adobe Acrobat Reader
WIN/ZIP
Norton AntiVirus Suite
RealPlayer
Open Transport bundled with MAC OS
Stuffit Expander

GOTS/COTS[3]
Entire Connection
TN3270
BRIO Query
Informed Filler Client
4th Dimension Client
Open Client
PAI
AdminSTAR
Entrust Direct
Entrust Express
Entrust ICE
Entrust Desktop
Travel Manager
IFM
EZReport
CCBS
ARPAS
Key Management System
Visitor Request
Remedy
F-Secure
SSH

3.2.5 Production Network Diagram

Figure 1 depicts the ARC Desktop Architecture

Figure 1, ARC Desktop Architecture

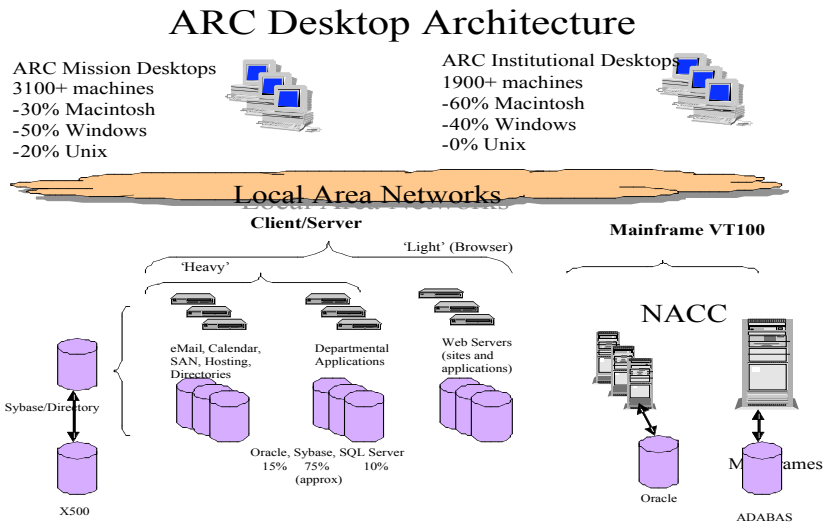

3.2.6 Systems and Support

Support is provided by two similar but separately governed models:

ODIN – Full seat support including OS and application versioning and builds, system administration, client software installation, and patch management though a dedicated set of System Administrators.

Departmental – Support is provided by departmental Systems Administrators who are responsible for hardware, software, patch and OS management

Client versions of software, and selected licensed server software is distributed via http on a website, http://arclib.arc.nasa.gov . This site contains all software that is licensed for general distribution at ARC and is user managed. Systems Administrators also use the site to obtain upgrades when needed.

Printers are distributed throughout the Center and can be ordered as an ODIN item or deployed as a departmentally owned printer.

Most institutional support computers are ODIN supported, while most mission and project specific systems are departmentally owned.

3.2.7 Facilities

There are two primary facilities supporting the Desktop environment:

N233 Central Computing Facility: This facility houses the ITSC Helpdesk that supports end users, and the software distribution servers
ODIN Offices: This facility houses the support and management of the outsourced desktops, load and version management functions

3.2.8 Technology Flashpoints

Diversity of computing platforms – ARC has a very heterogeneous set of computing platforms. It is imperative that Agency and government solutions take this into account. We propose that common solutions, using html and associated technologies (JAVA, XML) be used as the basis for deploying common systems, as opposed to searching for applications with separate clients for each platform.

3.2.9 Compliance

The desktop hardware and software environment at ARC complies with NASA Standard 2804.

3.2.10 Capabilities

ARC has the capability to deploy, operate, and maintain any standard software as defined in NASA
STD 2804.

3.2.11 To Be Condition

ARC desktop environment will not change substantially in terms of organization and support. ODIN will continue to be the primary provided of desktop services for institutionally related computing, while mission specific computing will remain a mix of ODIN and locally supported systems.

3.2.12 Application Services Component

Application Services at ARC support the institutional operation of the Center and are available to all users at the Center if their position requires it. There are 3 categories:

Agency Legacy Applications
Agency IFM Applications
Center Unique Applications

The levels of support provided for each type of application are different due to the ownership of the software code.

3.2.13 As Is Condition

The current systems configuration is that the Applications Development and Operations Branch (Code JTA) provides the application services, development, deployment, operation, and support; for all 3 types of applications.

In the case of IFM applications they manage the interfaces between the IFM applications and local systems and applications. The IFM applications are not hosted at ARC, nor do we install or maintain the software code or associated hardware. The ARC role is supportive of the IFM Program and the NACC. Our local Help Desk, ITSC does provide first tier support and then coordinates trouble ticketing with IFM Help Desks. These applications are Client/Server in architecture.

In the case of the Agency Legacy applications, we are responsible for the installation, and operation of the applications on unique ARC partitions are the NACC Data Center. Our staff do not maintain the code since responsibility for this is at the SESAS facility at MSFC. We do install code, test it, modify local applications to integrate with the Agency code, and then operate the systems on our own schedules for ARC needs and requirements. ARC does provide Tier 1, 2, and 3 support for these applications. These applications are Mainframe based applications.

Center unique applications are entirely designed, built, maintained, and operated locally. The Applications Development and Operations Branch, Code JTA, provides support for these applications. These applications operate on a variety of hardware and software architectures, including mainframe, client/server, and web based.

Agency applications fall into all three categories:

ADABAS/Natural applications, comprised of the legacy AIM Program applications (NEMS, NPPS, AMS) 47%
Client Server applications, comprised of the IFM applications, (currently Financial transactions for resources staff) 33%
Web based applications, comprised of WebTads, Travel Manager, and IFM Financials for casual users 40%

Note: percentages add to more than 100% since some applications can be served using more than 1 technology

Local applications also fall into the same 3 categories, but with different distribution of architectures:

ADABAS/Natural applications, comprised of the legacy Center applications (ISIS, Query Systems, TMS) 43%
Client Server applications, comprised of miscellaneous Center applications, (Visitor Badging, Center wide eMail, Facilities, and Key Management) 47%
Web based applications, comprised of miscellaneous Center applications (Visitor Badging, eForms) 20%

3.2.14 Systems Description and Operational Concept

The following systems are maintained at ARC:

Agency Systems and Applications:

NAIS
NEF
NEMS
NPDMS
NPPS
NRC
NSMS
NTDS (AdminSTAR)
AMS

Agency IFM Suite

IFMP (agency)
CF: Bankcard
CF: Business Warehouse
CF: SAP R/3
Resume/STARS
Travel Manager
WebTADS

Local Applications Suite

AARTOPS
ACH/TPS
ADMS
AEFS
AHUSER
ALIS
Ames GIS System Interface
Brio Query
CAML
CDMS
Center wide E-Mail
Data Warehouse Support
Download to HR Server
EEO System
EOUSER
EZReport
Facility 1400
FLTOPS

ISIS
Key System
LSA
Mailing Labels
Manpower
On-line Supply Catalog
Photo/Audio Visual
Supernatural
TAC

3.2.15 Production Network Diagram

Figure 2 depicts the Production Network that supports the Applications Services Component

Figure 2, ARC Applications Architecture

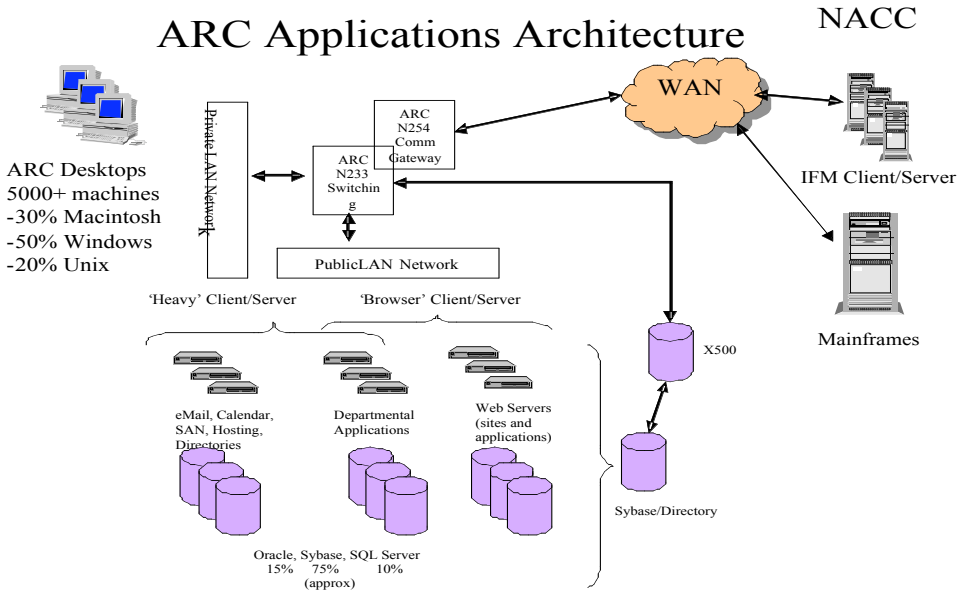

3.2.16 Systems and Support

Systems support is provided through contract services (Raytheon and Recom Technologies) led by a single dedicated Civil Servant. This group provides all management and technical skills required to operate, maintain, and support the applications service.

The support system used to integrate the Applications infrastructure, track issues, problems, and requests, is a Remedy® ticketing system. Applications, along with every other service and

function is integrated into this system which allows easy routing and status-ing of all ongoing and pending event analyses.

3.2.17 Facilities

There are 2 major facilities used to support the applications service:

NACC – Hosted at MSFC
N233 Central Computing Facility at ARC

These two facilities host the applications hardware, peripherals, and network connections that enable the services to be made available to Center users.

Programming support is distributed throughout offices and requires no unique facility.

3.2.18 Technology Flashpoints

Version lock issues associated with maintenance of and dependence on legacy applications. The continued reliance on this old architecture limits the ability to deploy certain new services without custom code and scripts.

3.2.19 Compliance

ARC applications comply with IT Security policies and requirements.

3.2.20 Capabilities

The applications service provide ARC with the capability to deploy, support, maintain, and operate any Agency-wide application using any existing technologies (mainframe, client/server, or web based).

3.2.21 To Be Condition

The application services are undergoing a continuous, but slow evolution from mainframe/Adabas and client server applications to a web centric deployment. The intent is to replace all applications at some point with a server side application that uses W3C standard browsers to present the information.

There are multiple steps involved. For the legacy mainframe applications, web front ends are to be used to access the application (dependent on rollout from MSFC). For client server, procurement, and deployment of COTS will complete the evolution.

3.2.22 Data Center Component

ARC operates a small Data Center that support Applications Services, Web Services, NACC head end, and Print Services.

3.2.23 As Is Condition

Data Center operations is staffed 24X5 beginning Monday morning at 12AM and ending Friday night at 12PM. This function is responsible for monitoring systems, emergency call backs, integration with Center emergency operations and trouble desk, printers, batch jobs, reports distribution, and acts as an off hours help desk.

3.2.24 Systems Description and Operational Concept

The ARC Data Center supports Central Services and Business Systems on the institutional side of ARC, and also supports R&D services as a hosting facility.

The Applications Development and Operations Branch (Code JTA) is responsible for the maintenance and operation of the facility. This group manages the hardware components: servers, storage devices, routing and switching gear, appliances, power, and environmentals; and software components: OS configurations, server side application configurations, security configurations; all maintenance and upgrades of hardware and software; interaction with NACC engineers; operations of systems, servers, batch jobs, and printers; and coordinates with the ARC Network Operations Center, ARC Help Desks, ARC Duty Office, and the NACC Help Desk.

Equipment is all rack mounted with the exception of a few legacy CPUs. The facility is supported by Gigabit Ethernet, facility wide UPS (with individual UPS for racks and CPUs), and is operated as a controlled access facility.

3.2.25 Production Network Diagram

Figure 3 depicts the ARC Data Center Network Architecture

Figure 3, ARC Data Center Architecture

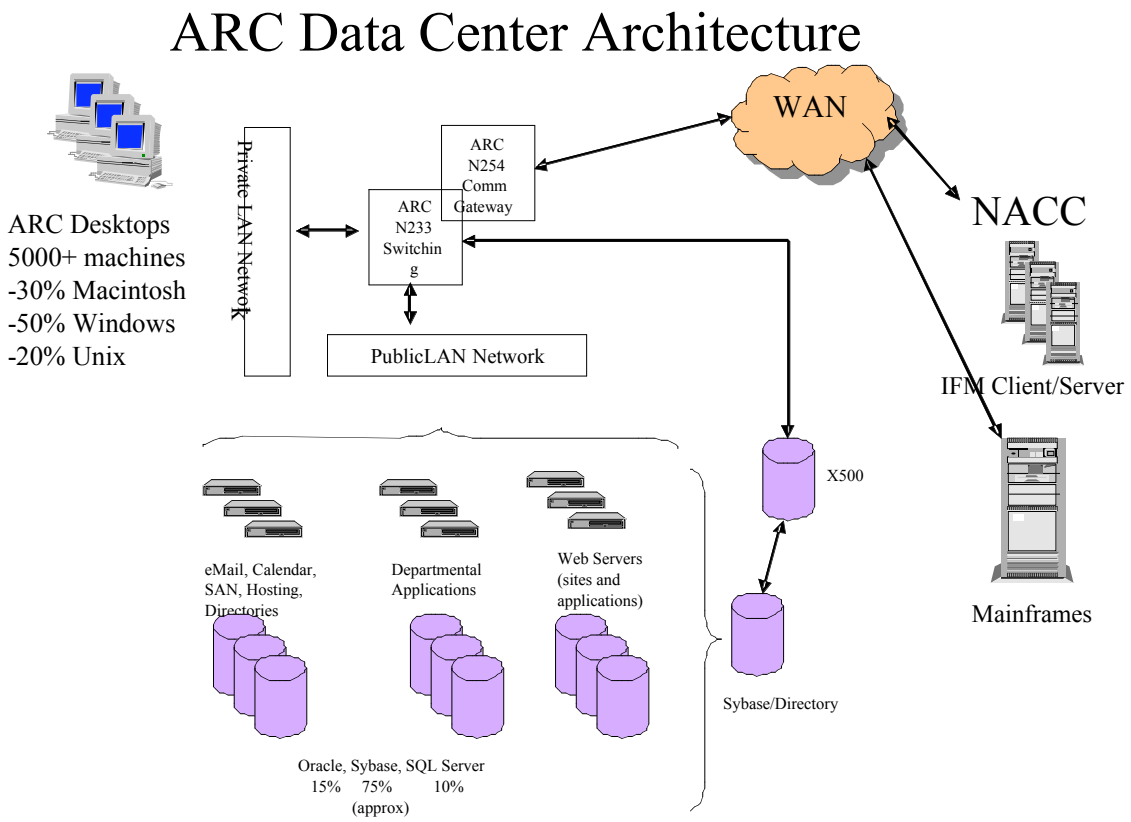

3.2.26 Systems and Support

The systems are monitored on site 24X5 and offsite 24X7 using IPMonitor as the primary event management software. Individual machines are configured to notify engineers via e-mail or pager in the event of a problem.

Event notification occurs via the Remedy Ticketing System and through the use of call down lists.

3.2.27 Facilities

N233 Central Computing Facility

This facility houses the ARC Data Center and all components associated with the NACC Data Center. In addition this facility also houses the Applied Information Technology Division and all IT Service Branches, including Networking and IT Security.

Extensive interactions occur with the NACC and IFM facilities at MSFC.

3.2.28 Technology Flashpoints

Secure connections between ARC and the NACC mainframes. Currently passwords are sent clear text as a user's login. This needs to be resolved so that we can comply with NPD 2810. Integration of print services. To effectively use print resources, the integration of all print systems is critical to reducing costs. Currently there are 3 basic print infrastructures: LAN, Mainframe, and IFM. Some LAN printers are integrated with NACC mainframe printing, but no overall plan to facilitate ad hoc switching and routing exists.

3.2.29 Compliance

The Data Center follows best practices for operations functions utilizing written SOPs and call down lists for standard operations and emergencies. Systems are configured to notify SAs when problems are about to, and do occur.

IT Security practices include locked facilities, sign in and registry of visitors and staff, logging and monitoring of key card entry, and remote monitoring of facility using vide technology.

3.2.30 Capabilities

This data center has the capability to support virtually all computational needs at ARC with the exception of supercomputing. The network, power, and environmental services are robust and do adequately support Central Services and Business services, and could also support more without additional cost or effort.

3.2.31 To Be Condition

The existing data center is undergoing changes as we reduce reliance on mainframe technologies. Local batch printing in support of Business Systems has been greatly reduced due to the implementation of IFM. Staffing and support will be adjusted downward to fit the new, reduced requirements.

The facility itself is being incrementally upgraded in terms of power, network, and racks so that we can more fully support the Central and Business Services, and mission related systems as requested.

3.3 Communications Segment

3.3.1 Wide Area Network (WAN) Component

The ARC WAN function connects the ARC local networks and services with the public and private networks that carry inter-center and internet traffic.

3.3.2 As Is Condition

This Peering Point connects 4 R&D networks, and the MSFC NISN (SIP and PIP) networks to the 3 ARC LANs which delineate the three security zones – Public, Private, and Open. There are two devices supporting this peering: the ARC Border Router and the ARC DMZ Router.

The external connections to the Internet are made through the ARC-Border Router via the SIP, by default, or the PIP as the failover network.

3.3.3 Systems Description and Operational Concept

The institutional networks at ARC have a single entry and exit point for all WAN traffic. This allows ARC to effectively monitor all traffic from an IT Security standpoint and enforce ARC and Agency Firewall rules.

All inter-center traffic is routed through NISN circuits. R&D networks utilize a variety of circuits but are routed though the gateway facilities or through the NISN services SIP and PIP.

3.3.4 Production Network Diagram

Figure 4 depicts the WAN connections supported at ARC.

Figure 4, ARC Network Border and Peering

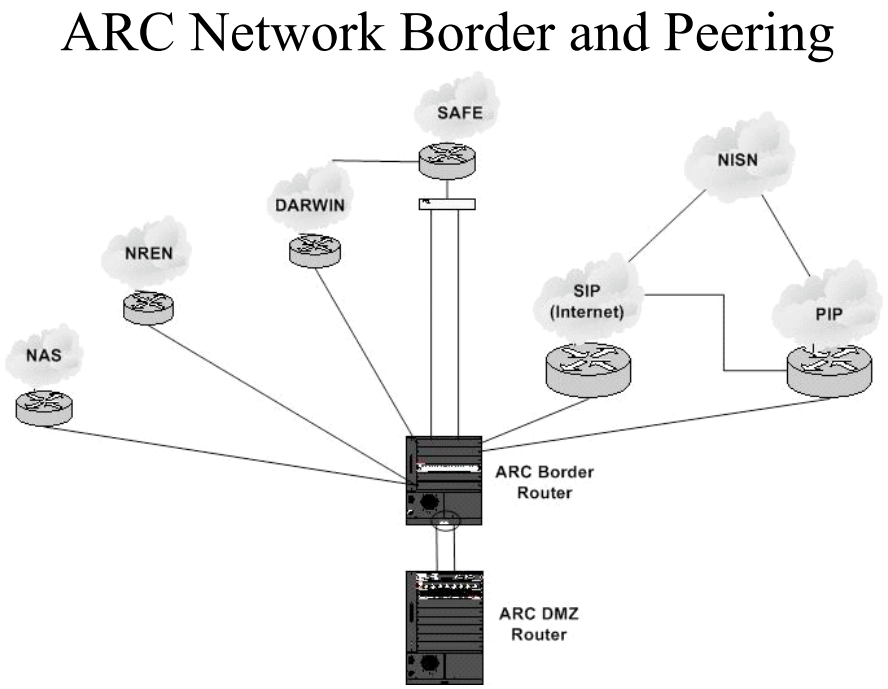

3.3.5 Systems and Support

The function is supported on-site 8X5 with on-call support 24X7.

3.3.6 Facilities

N254 Gateway and Communication Facility:
This facility houses the WAN access points, satellite and terrestrial links for data and video networks.

3.3.7 Technology Flashpoints

Network Security Perimeter (NSP) Project, Wide Area Network Redesign (SIP & PIP core replacement), and NASA Local Area Network Standards may level new requirements on the

center network infrastructure and necessitate additional resources to accommodate these impending requirements.

3.3.8 Compliance

ARC complies with IETF, W3C, and EIA/TIA standards wherever applicable.

3.3.9 Capabilities

ARC WAN network interconnects are capable of supporting 1 GB of traffic into the ARC LAN.

3.3.10 To Be Condition

ARC will implement the requirements of ongoing agency initiatives such as the Network Security Perimeter (NSP) Project, Wide Area Network Redesign (SIP & PIP core replacement), and NASA Local Area Network Standards when the standards are approved.

3.3.11 Local Area Network (LAN) Component

The Local Area Networks at ARC are designed to provide scaled levels of security for different uses while facilitating legitimate network traffic between the networks, and into and outside of the Center.

3.3.12 As Is Condition

The intent of the architecture is to segregate similar traffic and resources so that efficient routing/switching can be made, security appropriate to the risk can be applied, and that capacity and bandwidth can be managed to insure reliable, high speed connections.

3.3.13 Systems Description and Operational Concept

ARC has 3 internal networks (see Figure 2)
ARC Private LAN: network to support desktops, printers and internally facing servers; highly secure
ARC PublicLAN: network to support services and servers that provide functionality to PrivateLAN computers and external computers using a restricted and monitored set of protocols and ports; highly secure with monitored access externally
ARC OpenLAN: fully open network used to support resident agencies at Moffett Field

These LANs represent three separate security domains within AMES.

All desktop computers, servers, and other IP identified devices are connected to one of these three LANs. Access to the LAN(s) is through direct connection, or is routed through the ARC Border Router/DMZ configuration, or the Remote Access Server (RAS) using the public telephone system. RAS is provided to VPN service is provided to the users as a means of accessing the Private LAN securely while connected to the internet via RAS or an individual's personal ISP. They are required to run a client on their system to gain access and are authenticated via RADIUS.

Traffic is routed to the internal LANS from the perimeter firewalls and routing devices to the appropriate network. The network is architected with a Core, Distribution and Access Layer. Each LAN has a core layer comprised of three switches linked together with 4Gbps trunks for the Private and Public LANs and 2Gpbs trunks for the Open LAN. The Distribution layer or building switches are connected with a 1Gbps link to the closest Core layer switch. The Access Layer is connected to the Distribution layer to provide local network connectivity for the building resources (desktops, servers, printers, etc.). Each building does not have connections for all the LANs. The distribution of the LANs is determined by the organizations in each respective building.

There are two sets of firewalls: one for the Open LAN and one for both the Private and Public LANs. The rulesets on the Private/Public firewall are managed to provide protections for these two LANs which reside on separate address spaces to facilitate the separation of the rulesets.

3.3.14 Production Network Diagram

Figure 5 depicts the production LAN configuration

Figure 5, ARC Network Configuration

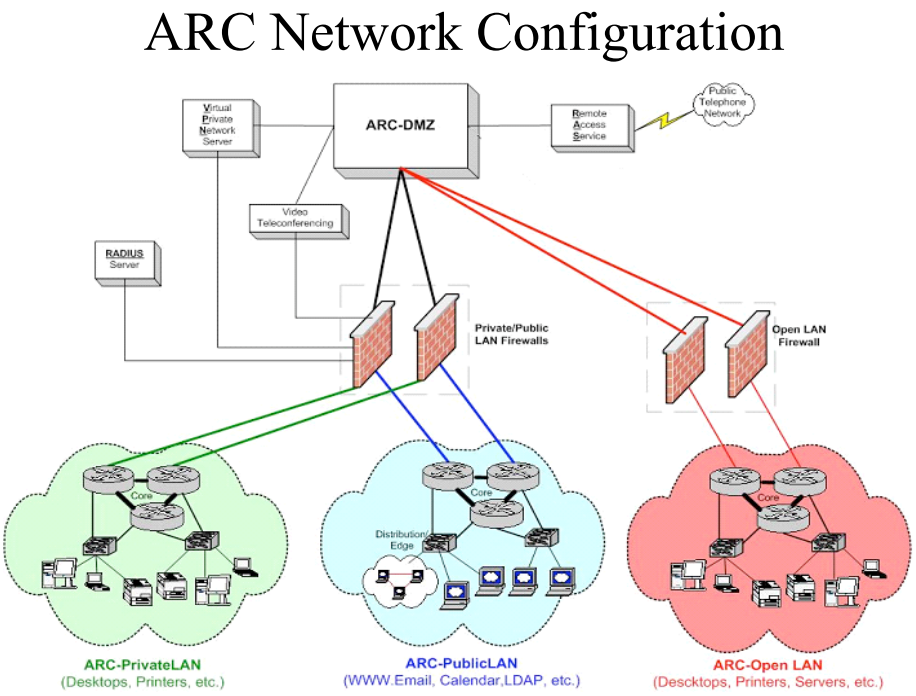

3.3.15 Systems and Support

The network is supported on-site 8x5 with emergency on-call support as needed.

Daily support is provided by the Network Operations Center which includes a Senior Network Engineer, two Network Engineers, five Local Network Administrators, and two Network Management System Engineers.

In addition to the NOC staff, there is a Firewall Engineer and a RAS/VPN Engineer.

These individuals comprise the entire team that addresses issues regarding the LAN and access to it.

3.3.16 Facilities

The core of the network is housed in three core locations in N233, N229 and N240. These locations contain all three LANs (Core switches). The external fiber plant spans the three core locations to provide redundant connectivity between the core devices to account for possible hardware failures.

3.3.17 Technology Flashpoints

Areas of concern for the LAN include physical infrastructure capabilities and the emergence and need for wireless LANs.

The physical infrastructure in several buildings needs to be upgraded to Cat5e standards to take full advantage of the gigabit capabilities that are available on the network. Many organizations do not have the funding to rewire their buildings and the Center does not institutionally fund these projects. The physical infrastructure will definitely impact the ability of Ames to move beyond 100Mbps, even 10Mbps computing in its entirety.
The emergence of wireless LAN has created an area of great controversy. Developing the policies and enforcing them have become a challenge. Current policy prohibits wireless LANS from connecting to the Private LAN. There is currently no practical way to completely monitor and detect the deployment of wireless LANs. Currently, these deployments have been managed solely by the user community, and no standard way of doing this has been developed. There currently are no guidelines for approved hardware which has been tested for use of the network nor have any documented configurations been defined for deployment. Finally, there is no governance model defined of these devices. The NOC at present is not responsible for the wireless LANs but are often called to support users behind these LANs which are connected to ARCLAN. The lack of central management impedes the NOC's ability to monitor, manage and maintain the network as well as troubleshoot problems.

3.3.18 Compliance

The NOC complies with all policies and guidelines put forward by the IT Security group including the NPG 2810, APD 2815.1, and APG 2815.2. The NOC also acts as an enforcing body for these policies. All physical installations are done in accordance with EIA/TIA standards and practices.

3.3.19 Capabilities

The current network architecture provides the Ames customers with Gigabit capability to the desktop provided that the physical building infrastructure is in place to support it (i.e. building wiring, Gigabit access layer switch, Gig NIC, etc.).

3.3.20 To Be Condition

The network has been structured in such a way that the backbone can be upgraded to 10Gbps without a considerable amount of redesign. This allows Ames the flexibility to upgrade the backbone with hardware being the majority of the cost.

In addition, Ames will be extending more stringent authenticated configuration management of the access layer.

Lastly, we are awaiting direction on NASA Security Perimeter (NSP) for any changes we may need to make to our architecture.

3.3.21 Voice Component

Voice Services at ARC supports telephone related requirements for NASA and tenant agencies at Moffett Field. Services include Operation and Maintenance of the Telephone Switching System; Telephone Add/Move/Change/Repairs; Voicemail Services; Telephone Directory; Operator Services; Government Calling Cards; Cellular Telephones and Copper Cable Pair Assignments.

3.3.22 As Is Condition

The Voice Service Group, within the Network and Communications Branch (Code JTN), provides, either directly or as a customer liaison, all telephone services.

The local Help Desk (IT Support Center) provides basic first tier support, and then coordinates Remedy Trouble Tickets with the Voice Service Group. Issues related to FTS2000 are handled via the MSFC Trouble Desk.

Telephone Add, Move and Change requests and Cellular Services are provided to end-users through a Demand Services type chargeback process.

3.3.23 Systems Description and Operational Concept

Installed at ARC, is a Nortel Networks SL-100 SuperNode PBX, running at software level MSL-15. The primary host is located in Building N263, and two remote PBX switches are located in Buildings 17 and 780. These switches currently provide over 8,600 lines to NASA ARC and Moffett Complex end users. The host and remotes are connected via fiber. Voicemail is supplied by a 6-node Siemans Rolm Phonemail system. Call collection is provided by a Pollcat III system; and call detail processing/telephone management system is provided by Comware.

Carrier service is provided by 4 FTS PRI's; 8 DID/DOD PRI's and 1 DSN/Autovon T-1. PRI service connected to the SL-100 through a Secure Logix PBX Firewall. There are a total monthly average of 657,000 inbound and outbound trunk attempts.

Ames Center Operators handle an average of 6,422 calls per month.

To support 911 calls to the on-site Security PSAP Office there are 3 CAMA trunks and a Telident System connected to the Host.

3.3.24 Production Video Network Diagram

Figure 6 depicts the Telephony system architecture:

Figure 6, AMES Telephone System

Figure 1

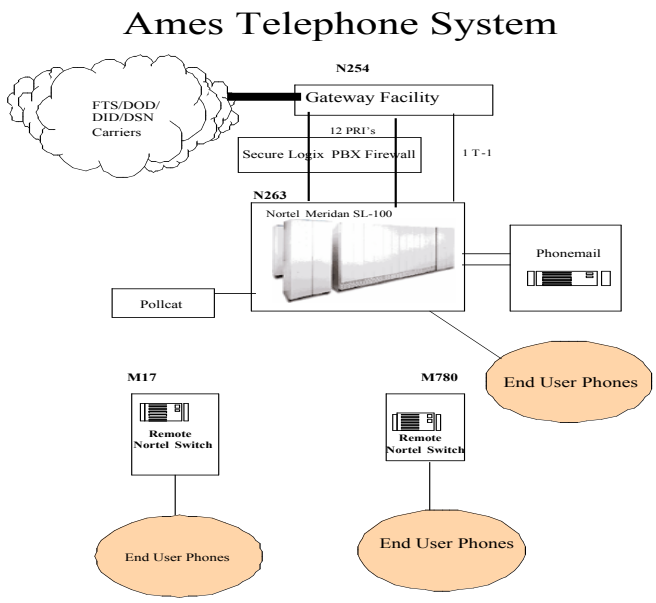

3.3.25 Systems and Support

System support is provided through contract services (Raytheon and NexteriaOne) led by a single dedicated Civil Servant. This group provides all management and technical skill required to operate, maintain, and support the telephone system.

3.3.26 Facilities

N254 Gateway and Communication Facility:
This facility houses the FTS, DID and DSN Carrier access points.

N263 Telecommunications Facility:
This facility houses the switching equipment and voicemail hardware.

M17 and M780 Switching Facilities:
These two buildings house the remote switching facilities that service separate physical areas of the facility.

3.3.27 Technology Flashpoints

In order to sustain adequate maintenance contract support, the hardware and software version of the PBX must be kept at an “active” vs. “retired” version.

The existing voicemail system lacks the capacity needed to meet full customer requirements.

The existing Comware Telephone Management System is cumbersome when used for Full-Cost Accounting Phone Asset Tracking and lacks web access capabilities for customer report retrieval.

3.3.28 Compliance

The ARC PBX complies with IT Security policies and requirements.

3.3.29 Capabilities

Voice Services provides its customers with reliable telephone related services.

3.3.30 To Be Condition

In addition to a Disk Drive Upgrade, the PBX will be upgraded from version MSL-15 to MSL-17 within the next couple months to remain at an “active” software level.

No current plans to upgrade to VoIP at this time.

3.3.31 Video Component

The Video Network (VidNet) at ARC is designed to provide integrated, efficient, and comprehensive switching, routing, and content distribution services for analog and digital based video/audio content and requirements in to, out of, and throughout the Center in support of institutional, research, public outreach, television production, videoconference, collaboration, external communications (public affairs), and NASA-TV activities and users.

3.3.32 As Is Condition

The individual major system elements comprising the integrated video network include-
Video Control/Processing Center (VidNet-VCC)
External Video Gateway (VidNet-EVG)

Video Distribution Head-end (VidNet-CATV HE)
Video Distribution Cable Plant (VidNet-CATV CP)
Digital Video Head-end (VidNet-Digital HE)
Digital Video Servers/Bridges (VidNet- Servers)
Direct Venue Interface (VidNet-Venue)
These major system elements are generally overdue for lifecycle replacement, however, are continuing to perform at minimally acceptable, but incrementally improving, performance, quality, and reliability levels due to recent initiatives and investments tailored to maintain, re-purpose, and extend serviceability of the plant and services as part of a planned, orderly, migration to a totally digital video distribution environment starting with the Agency's initial transition to Digital Television (DTV) distribution for NASA-TV and going forward to encompass desktop and other digital video modes and services capable of replacing, improving, and expanding the existing Video Network capabilities and functionality.

3.3.33 Systems Description and Operational Concept

The Video Control/Processing Center (VCC) and External Video Gateway (EVG) facility (EVG/VCC), located in N240, comprises the video/audio reception, routing, switching, distribution, monitoring, and signal processing nexus for the Center. See figure 5.

The facility integrates the Center's External Video Gateway (VidNet-EVG) and antenna plant, responsible for video signals entering and leaving the Center, with the Video Control/Processing Center (VidNet-VCC), that performs video signal switching, routing, processing, and quality monitoring in support of the co-located Video Distribution Head-end (VidNet-CATV HE), Digital Video Head-end (VidNet Digital HE), and Direct Venue Interface (VidNet-Venue) system elements.

These elements gather and disseminate information in various modes and qualities throughout the Center utilizing the Video Distribution Cable Plant (VidNet-CATV CP), Digital Video Servers/Bridges (VidNet-Servers), and Direct Venue Interface (VidNet-Venue) system elements as appropriate to the connectivity, format, and signal quality requirements; institutional quality, production quality, or digital video of various qualities and formats.

3.3.34 Production Network Diagram

Figure 7 depicts the ARC Video Network Architecture

Figure 7, ARC Video Network Architecture

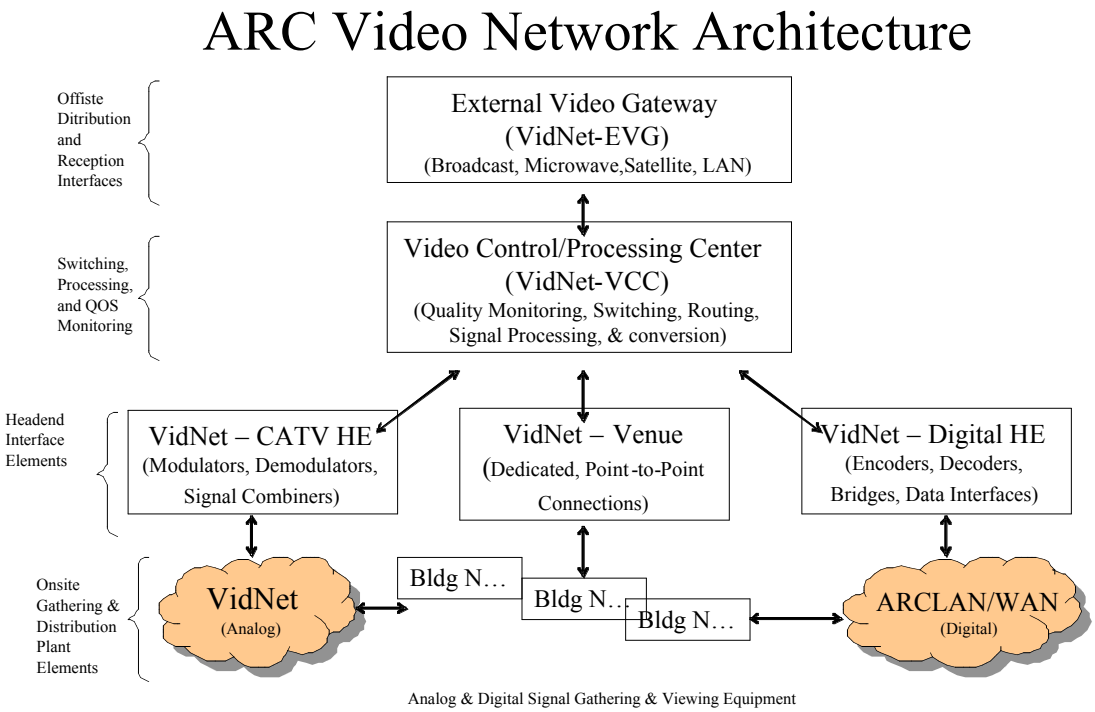

3.3.35 Systems and Support

Systems strategic planning, requirements definition, and technical performance monitoring of contractor provided support (Raytheon ITSS Corporation) is provided and coordinated under Civil Servant leadership. The Government/Contractor team provides all engineering, management, and technical skills required to plan, perpetuate, operate, maintain, monitor, and support the various Video Network elements. The support system used to coordinate service status, track issues, problems, and requests is a Remedy ticketing system. Video Networks, along with every other service and function is integrated into this system which allows easy routing and statusing of all ongoing and pending events and activities affecting, or being affected by Video Networks.

3.3.36 Facilities

N240 Video Control/Processing Center (VCC) / External Video Gateway (EVG) Facility:

This facility is located in room 220 of N240 and comprises approximately 650 square feet of equipment and operation space housing the Center's video/audio reception, routing, switching, distribution, monitoring, and signal processing nexus for the Center including the co-located Video Distribution Head-end (VidNet-CATV HE), Digital Video Head-end (VidNet Digital HE), and Direct Venue Interface (VidNet-Venue) system elements.

3.3.37 Technology Flashpoints

Many of the video technologies and standards for the newer digital based video tools and capabilities, and their compatibility for integrated use in collaboration and on-demand distribution, are still being finalized and proven in the standards, design, manufacturing, and business sectors including-
> StreamingMedia technology format standards
> MPEG-2/4 standards definition and applications for Campus-wide network integrations
> Digital collaboration tool compatibility (vid., mux, control, audio, & comm. interfaces)
> Production & dist. impacts of embedding, de-embedding, processing, and V/A sync.
> DTV integration standards and implementation definitions for broadband networks

3.3.38 Compliance

All Video Network system elements comply with video, copyright, Section 508, and IT Security policies and requirements.

3.3.39 Capabilities

The Video Network and associated service offerings provide ARC with the capability to quickly, reliably, flexibly, and economically deploy, support, maintain, and operate a variety of modes and styles of video services serving the diverse base of customer and content quality requirements including:
-Reception and transmission of various video modes to, within, and from Ames
- Switching/routing of multiple format video content among and between service areas
- Processing and conversion between various video modes and types
- Acquisition, production, mezzanine, institutional, and distribution level content quality

3.3.40 To Be Condition

The Video Network shall consist of a current technology core of equipment and infrastructure in approximately the same basic operational configuration previously defined utilizing digital and broadband modes and service types that have been incrementally transitioned into service as part of a planned, orderly migration from the "As Is" condition to a totally digital video distribution environment integrated largely onto a high speed, MultiCast enabled, digital data network infrastructure serving ARC. The service set shall support all video modes and communication services required to successfully compete in a global high technology research and development

environment while meeting all daily institutional, industrial, research, production, and simulation operations throughout the campus. The aggregation of these services shall provide for fully replacing, improving, and significantly expanding upon the "As Is" Video Network capabilities and functionality with significant increases in signal quality options, bandwidth efficiencies, and resolutions, from low to moderate resolution modes, such as MPEG-4, for institutional, desktop video, remote collaboration, public outreach, and industrial applications, through full motion, uncompressed, Standard Definition (SD) and High Definition (HD) television modes, such as MPEG-2, available to support the needs of television production, NASA-TV, advanced research and development, and real-time simulation activities in an expedient, flexible, and economical fashion. The CATV head-end and plant, VidNet-CATV HE and VidNet-CATV CP, shall, by virtue of upgrades required to support interim Digital Television (DTV) distribution requirements, become capable of supporting Standard Definition (SD) and High Definition (HD) video/audio forward and reverse feeds in addition to other broadband communications services. The inherent broadband capability shall allow the ability to provide additional, special purpose, "out-of-band" video, telephone, and data capacity for emergency communications, tertiary data and telephone system back-up links, high bandwidth simulation video/data, and other specialized or bandwidth and Quality of Service (QOS) intensive applications that could benefit from multiple, dedicated, high bandwidth information channels not impacting, or being impacted by, routine traffic on, or failure of, a primary data or telephone element.

3.4Electronic Work Environment Segment

3.4.1 Messaging and Collaboration Component

The Applications Development and Services (JTA) Branch provide centralized messaging support for the Ames Research Center (ARC) community and its collaborators (i.e. universities and scientists). This facilitates communications and enhances productivity within ARC's workplace while maximizing cost savings by consolidating the maintenance licenses. In addition, the messaging hardware infrastructure is maintained by qualified, certified professional system administrators who update the OS, provide security patches, and ensure system integrity.

3.4.2 As Is Condition

The current messaging service provides application support Monday thru Friday, 11 by 5, from 7am to 6pm (excluding holidays) for 4500 users. This includes the Inbound Messaging Relays, Central Messaging Store/System, List Management Server, and Center wide Emails.

3.4.3 Systems Description & Operational Concept

The ARC messaging infrastructure is shown below in Figure 8. This architecture includes the following key elements:

Inbound Message Routers – One or more systems that receive all inbound SMTP traffic1 for a particular domain. These systems are typically known to the local domain name service (DNS) servers as the mail exchangers (MX) and have the corresponding DNS MX records.
Message Stores – One or more systems that actually hold the users' mailboxes. These servers can be configured for store-and-forward, server-resident, or a combined messaging solution.
Client Access Proxies – One or more systems that can be used by the user community to access messages on the message stores. The use of these systems allow the user community to remain unaware of the quantities and types of message stores as well as to avoid associating users and their mailboxes to specific message stores.
Outbound Message Routers – One or more systems that receive all outbound SMTP traffic for a particular domain. These systems are typically known to the users' clients.

Figure 8, ARC Messaging Infrastructure

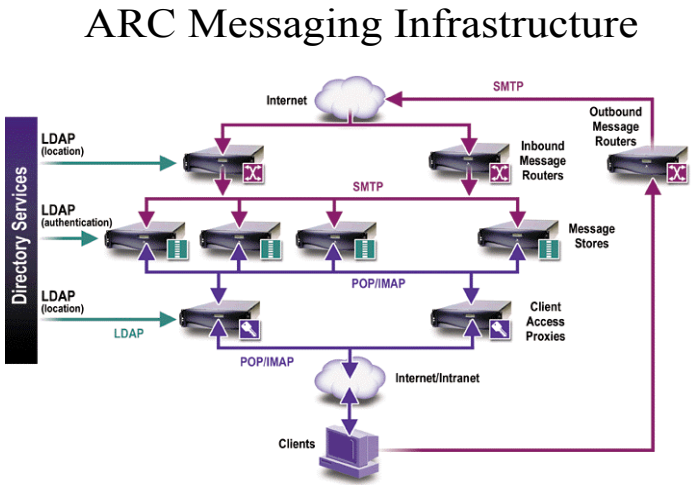

3.4.4 Production Network Diagram

ARC's centralized messaging infrastructure is hosted on the Public network. Figure 9 depicts the network architecture.

[1] The messaging industry refers to systems that handle SMTP traffic as message transfer agents (MTA).

Figure 9, ARC Messaging Network Architecture

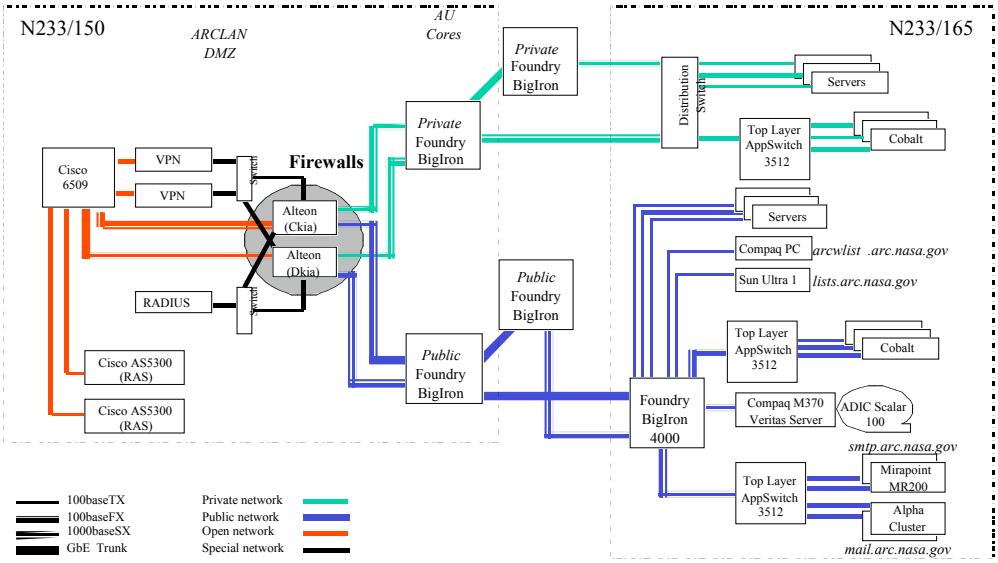

3.4.5 Systems & Support

The current messaging service provides off-site hardware vendor and on-site application support Monday thru Friday, 11 by 5, from 7am to 6pm (excluding holidays).

3.4.6 Facilities

Existing facilities are used to support ARC's email infrastructure and service. ARC provides computer rooms to house the servers and offices for the system/application administrators.

3.4.7 Technology Flashpoints

None.

3.4.8 Compliance

The NASA Electronic Messaging Architecture, Standards and Products (NASA-STD-28152) defines an architecture for the design, implementation and operation of Electronic Messaging for NASA. This document established the following fundamental architectural definitions for Agency messaging:
A Simple Mail Transfer Protocol (SMTP) backbone
Multipurpose Internet Mail Extensions (MIME) attachment interoperability
A client centric implementation; suggests the use of the Post Office Protocol (POP)3 or the Internet Messaging Access Protocol (IMAP)4
Use of the Client/Server model and Transmission Control Protocol/Internet Protocol (TCP/IP)
The elimination of file based mail systems and gateways
A continued commitment to X.500

The NASA Interoperability Profile for NASA E-mail Clients (NASA-STD-2808A) defines the list of E-mail interoperability interface requirements for the Agency-wide electronic messaging system. This document established the following mandatory, preferred, and optional requirements for clients, servers, and gateways (only those relevant to this document are listed):
Simple Mail Transfer Protocol (SMTP) header integrity (mandatory); requires support for SMTP protocols and message formats (STD 10 and STD 11) as well as retention of all headers and respect of all standards-defined headers
Domain Name Service (DNS) support (mandatory); support correct E-mail routing via the DNS (RFC 1034 and RFC 974) or fully delegate to a component that does (includes proper support of "MX" records).
Multipurpose Internet Mail Extensions (MIME) support (mandatory); establishes minimum MIME requirements (RFC 1521, Appendix A) as well as specifying the supported registered MIME types.

The NASA Directory Service Architecture, Standards, and Products (NASA-STD-2807C) defines all aspects of directory services involving mission-related, general-purpose, research, administrative and scientific computing, and networking throughout the Agency. It established the following fundamental architectural definitions for Agency directory services (only those relevant to this document are listed):
Requires that NASA maintain a distributed, Center-based, X.500 directory hierarchy; Center X.500 name space must be the authoritative repository for the relative distinguished name (RDN) that is bound to Center civil servant and contractor end-user identities.
Requires the NASA Directory Service to provide an email address "reflector" service that enables the simplified NASA SMTP email address in the form of "firstname.lastname@site.nasa.gov"5.

---

[2] The OneNASA Email activity is expected to have an impact on the NASA Messaging Architecture.
[3] The document specifies RFC 1939, *Post Office Protocol – Version 3*
[4] The document specifies RFC 2060, *Internet Messaging Access Protocol – Version 4rev1*
[5] Current OneNASA activities are changing this to *name@nasa.gov* for NASA civil servant staff.

3.4.9 Capabilities

The ARC Messaging System can support up to 50K users with POP and IMAP.

3.4.10 To Be Condition

ARC has no plans to modify the current configuration.

3.4.11 Public Web Component

A central web services function exists at ARC to support the Center's management of websites. There are roughly 300 registered, specific websites at the Center. The Web Services staff includes the ARC Webmaster and technical support staff to administer the function. Technical functions include website hosting, management, development, and curation of websites. The Web Services function also manages NASA policy implementation and support, and policing of websites including the web registration and tracking process that insures 508, COPPA, export control, and security compliance.

The Central Web Services group provides for the development and maintenance of ARC Public and Intranet Homepages.

There are 3 means for website development:

Customer funded, and done within the program, project or line organizations
Customer funded and done by the Documentation Development Division (Code JI). Most of this work involves static pages
Customer funded and done Central web services organization. Much of this work involves application level coding, database integration, and authentication.

3.4.12 As Is Condition

Central web services is provided through the Applied IT Division at ARC and is supported by a civil service lead (the ARC Webmaster), three contractors, and two students. Hosting is supported by a production web server, a staging server, and a database server. End-user managed (e.g. self-managed) hosting is also provided on a dozen low-end Sun Cobalt servers.

One of the key roles the Central Web Services performs is coordination of content provisioning by ARC programs, projects and line organizations to the Agency's portal.

3.4.13 Systems Description and Operational Concept

Hosting of web sites includes provision of:

Server Space
Account Management
Network Access
Backup and Recovery
IT Security
Server Administration
Software License Maintenance and Management
Hardware Maintenance and Management

Website development is provided for the ARC Homepage and Intranet Homepage at the direction of the Public Affairs Office. Other centrally provided website development, if any, is customer funded by charge-back. However website development work typically takes place within ARC programs, projects and line organizations, and is not centrally provided.

Policing of websites (e.g. for security, 508, export control) and setting of website standards is provided centrally for all websites at ARC under the guidance of the ARC CIO.

3.4.14 Production Network Diagram

Figure 10 depicts the Public Web Services Architecture.

Figure 2

Figure 10, ARC Public Web Services

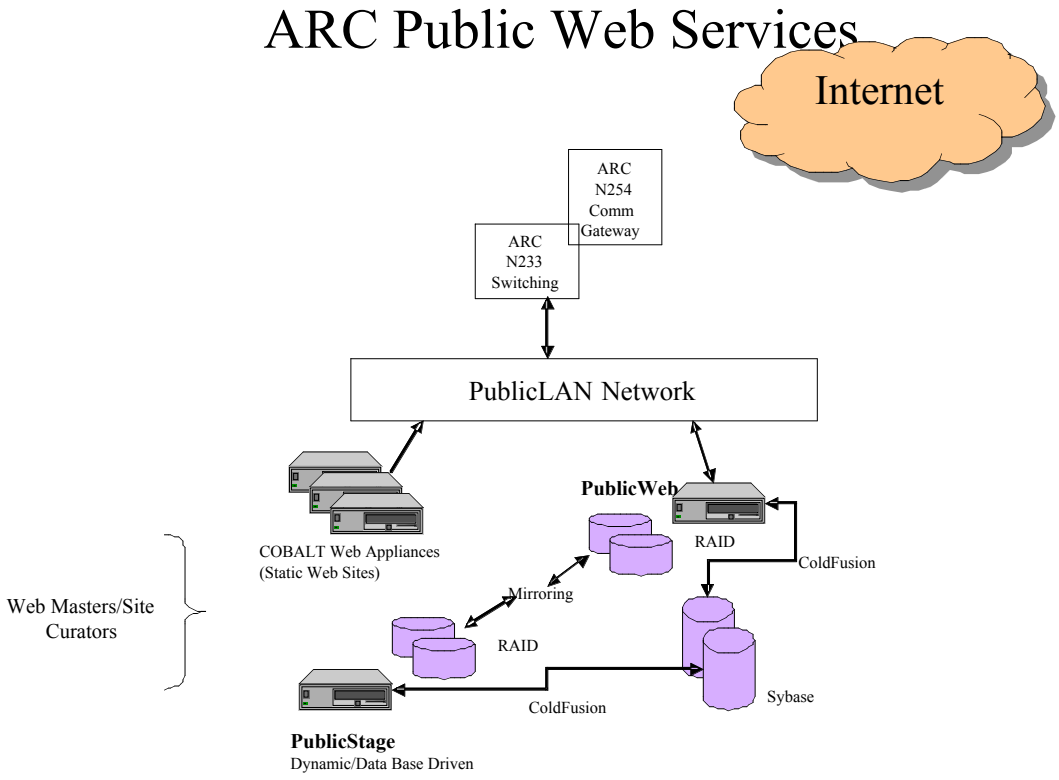

3.4.15 Systems and Support

The servers for this service consist of a production web server, a staging server, and a database server for centrally hosted and managed websites as well as a dozen low-end Sun Cobalt appliance servers made available to Center staff for hosting of end-user managed websites.

Production Web Servers:	1 x Sun 280R
13 x Sun Cobalt RAQ4	
Staging server:	Sun Ultra 1
Web Database system:	Sun E3000

Also there is a contract with ATOMZ for outsourced web search service for ARC public homepage.

3.4.16 Facilities

These servers are housed in the N233 Central Computing Facility at ARC

3.4.17 Technology Flashpoints

There is a general need to raise XML expertise among the ARC web community, which may be critical to preparation of ARC content for upload into the NASA portal.

Websphere vs. Sun J2EE and the lack of agreed upon standards.

3.4.18 Compliance

All new websites are registered prior to publication and undergo auditing to insure compliance with Section 508 requirements, export controls, adherence to Center and NASA policy, and adherence to design standards. Regular auditing of existing sites is performed to insure continued compliance.

Reporting is through the ARC CIO.

3.4.19 Capabilities

Expertise provided encompasses web policy and enforcement, server administration and high end web development skills.

3.4.20 To Be Condition

The Sun Cobalt RAQ4's are obsolete. Websites on these systems will be migrated to the Sun 280R production web server. The web database server Sun E3000 is obsolete and is being replaced with a low-end Sun server (e.g. a Sunfire or equivalent).

A new ARC content staging service may need to be developed to meet the requirements and standards pertaining to delivery of ARC content to the new NASA web-portal service.

4 Glenn Research Center (GRC)

4.1 Computing Services Segment

4.1.1 Desktop Hardware and Software Component

The GRC Desktop Component consists of the desktop elements of the Integrated Desktop Environment (IDE) provided in the overall Computing Services Segment. This includes Wintel, Mac and Unix desktops as well as laptops and locally attached printers, all of which are provided with a wide variety of services. Glenn Research Center considers the Desktop component to be the primary window to services for essentially all users, including many Mission Specific IT functions.

This component has interfaces to all the other components. It interfaces to the Application Services component for access to a wide variety of both centralized and distributed applications requirements for users. It interfaces to the Data Center component where centralized support functions can be leveraged for economies of scale and increased reliability. It interfaces to all components of the Communications Services segment and of the Electronic Work Environment segment.

Most of the desktops, both Office Automation, IT Infrastructure, and Telecommunications and Program Unique Specific, at Glenn are serviced by the local ODIN service provider.

4.1.2 As is Condition

The Glenn ODIN vendor provides desktops in all seats that conform to the rankings established by the Alterion benchmarking results per the terms and conditions of the ODIN master contract. The specific configurations offered change quarterly. In addition, the Glenn ODIN vendor provides a center standard load that is fully compliant with NASA Standards 2804 and 2805 as they are published.

4.1.3 Systems description and Operational Concept

The Glenn Integrated Desktop Environment is the core of all central segments and can be considered to consist of five major components. They are:

Centralized and Distributed Services (parts of Application Services, Data Centers, and Electronic Work Environment)
Network Access (Communications Services segment)
Wintel-based Clients
Macintosh Clients
UNIX Clients

For the Wintel desktop clients, the primary integration is provided by a Windows 2000 domain structure that provides capability for centralized management of software push, user centralized data and user profile storage and integrated network access, among other capabilities. Software pull for the Mac users is provided, and some UNIX software pull services are provided via services on one of the primary Data Center servers. In addition, access to major center or agency level applications (such as IFM) is available to all desktops via the ICA Citrix client Win Center Pro server architecture. This environment allows for both a centralized software management process as well as very minimal impact on distributed Mission Specific desktops.

IDE clients provide office automation functionality to the Glenn Research Center user community. The clients provide software both required and recommended by NASA-STD-2804. In addition to the standardized software, IDE provides a means to distribute locally-developed and commercial software to all IDE users or to a specific group of users.

The IDE Windows 2000 client is by far the largest IDE client being used.

Any Macintosh user who is connected to the network has the ability to access and download the Macintosh IDE software. Glenn is currently in the process of upgrading Mac users to the OS 10.2 operating system and has completed that process for all users who have not obtained a waiver.

UNIX Operating System support is intended to provide both baseline configuration guidelines for each of the supported vendor's UNIX hosts within the domain, and expert assistance with UNIX platform issues. It is assumed that the person(s) providing this function will possess expert knowledge of the platforms they support, as well as a direct interface to a contract-supplied vendor support infrastructure.

This support role will also be responsible for providing specific system guidelines for configuration of UNIX hosts beyond the default configuration shipped by the vendor. These guidelines will provide detailed instructions and automated installation mechanisms. These guidelines will permit UNIX hosts to become fully-functional members of the network domain and participate fully in the standard suite of distributed domain services and applications available, while maintaining an easily-supported configuration. For a complete description of these guideline elements, see the NASA Strategy for UNIX System Configuration document.

It should be clearly noted that the UNIX OS support service is intended to support *administrators*, not end users. The level of support available from this service is tertiary, or higher.

Currently, the vendor platforms and OS versions which receive UNIX OS support within the GRC domain are (version and release levels are generally maintained at those specified in NASA STD 2804 and NASA STD 2805):

Sun Microsystems Inc.: Solaris
Silicon Graphics Inc.: IRIX
Hewlett-Packard Inc.: HPUX

Intel: Linux, RedHat

4.1.4 Systems and Support

The system consists of approximately:

Wintel – 3487 distributed user seats
Mac – 366 distributed user seats
UNIX – 206 distributed user seats

The ODIN Help Desk supports this component.

IDE has several existing support processes (some of which are provided native via the desktop, most provided via one of the other component services). They are:
Standard system, security, and log monitoring
Troubleshooting user application and system anomalies
System backups and restores
Actively investigate software and firmware upgrades
Maintain emergency shutdown/startup procedures
Maintain participation in production configuration control meetings. For more information on central configuration control procedures, refer to the Change Configuration Control (CCC) environment description.
Maintain a catalog of installed-software
Secure administration user-ids and passwords
Maintain web content such as frequently-asked questions, problem matrix, UNIX and RAS documents.
Respond to feedback submissions from the Help Desk (Remedy), support mailing list, and WinCenter Pro User Feedback web page.
Actively check software and hardware vendors' web pages for service packs, hotfixes, and software and firmware upgrades. Then determine which ones should be installed and when.
Maintain an electronic log of hardware and software maintenance activities performed.
Monitor disk space on all servers.
User-id administration

These distributed seats require services from the other components in order to fully function.

4.1.5 Facilities

There are minimal specific Facility requirements for this component. Each user, of course, must have sufficient desktop space and power and network connections. Physical facilities for servers and such is primarily covered by other components. One room in the Research Analysis Center is provided to the OD|IN vendor for on-site Help Desk support. Other Help Desk and supporting maintenance and support facilities are the responsibility of the ODIN vendor.

4.1.6 Technology Flashpoints

All ODIN seats and most non-ODIN seats are, or will be, compliant with NASA Standards 2804 and 2805.

Flashpoint: Desktop platform diversity. Due to the diverse nature of NASA interactions with business, academia, and the public, and its own internal requirements, NASA has a strong requirement to conduct business across a highly heterogeneous set of platforms. For example, many scientific and engineering COTS and GOTS products are available only on UNIX platforms. Several Centers have recommended the NASA Enterprise Architecture be more focused on open and common approaches such as JAVA and XML. The recent migration of the Windows 98 to Windows 2000 service domain structure in the Agency was a very demanding exercise and preliminary indications are that the migration from Windows XP to its successor will be every bit as difficult. It has been suggested that perhaps now is the time to revisit the Architectural dependence on Windows in favor of a more open approach.

There is potential flashpoint concern at the Agency level with respect to provision of ICA/Citrix access to other components of the infrastructure. In particular, Glenn has deployed the ICA/Citrix solution broadly to the UNIX and Mac desktops in order to enable access to local application services as well as for access to parts of the IFM applications. This solution allows the potential for many of the Application Services currently available in that component to be hosted in the Data Center when the service provider sees a cost or other support opportunity. Such hosting in a Data Center would enable leveraging economies of scale, security, and other features provided by centralized management. However, in order to offer such improved services to various Mission Specific desktops and Center-specific service providers, we would need to be able to provide and manage a very wide variety of services unlikely to be available under an Agency-level service configuration.

Management flashpoint. Glenn currently does not manage this component as an entirely separate entity. Rather, it is managed largely via performance and cost metrics associated with ODIN seats that incorporate services bundled in from other components. Code R is currently engaged in negotiations for Delivery Order 2 and the degree to which components can be disaggregated.

4.1.7 Application Services Component

This component is by design a combination of centralized and distributed services. A part of the capability runs on hardware that resides in the central Data Center (room 160, Building 142), and that hardware portion of the resource is captured in the Data Center component. Much of the service is a collection of distributed capabilities responsive to the requirements of special segments of the customer community. The distributed portion is generally on small to moderate servers at the customer location.

The goal of the service area is to (1) provide an underlying capability for customer subsets to meet their unique needs and (2) to provide the opportunity for those customer subsets to utilize either ODIN or the Data Center to leverage economies of scale if/when it becomes favorable to do so. With the diversity of application services required by the entire user community, it is essentially impossible for a single Data Center to provide all the applications and functionality required. A selection of applications is described below. This list is not exhaustive.

4.1.8 Systems description and Operational Concept

Glenn has negotiated the local ODIN service so that many of the distributed application services are hosted on an ODIN server seat and supported where required by augmentation with Distributed Systems Administration services. Many central services are also hosted on ODIN server seats but the software managed by the Computer Services Division. However, several other services, notably those related to either Experimental Data Systems or Engineering systems that provide mission related services are hosted in part or in whole on systems acquired and maintained by specific organizations. All are serviced by common communications, collaboration, and security services. A representative but not exhaustive list of services is provided below.

4.1.8.1 AutoCAD System Services

The AutoCAD system is a lab-wide, centrally operated system, serving the CAD needs of the GRC user community, including on-site, near-site and off-site personnel. The system provides access to both CAD software and document management software for CAD drawings.

The AutoCAD system at GRC consists of a group of servers that provide for the access to the CAD and document management software through shared licensing. These servers not only provide access to the CAD software but also provide the storage medium for CAD drawings.

Physical access to the servers is restricted to those individuals who have access to Rm. 160 in Bldg. 142. Logon rights are granted to the administrator of the systems, the backup administrator, the tech support person, and the computer room operators (for shutdown and start-up activities).

Connectivity and functionality problems in regards to both AutoCAD and WorkCenter are handled through the Help Desk. When a help call is received, the Help Desk forwards the call to the AutoCAD support group. The AutoCAD/WorkCenter System Manager or the AutoCAD Technical Support will then work on the call. Usage issues are not officially supported.

4.1.9 Graphics and Visualization (GVIZ) Services

The GVIS lab provides a focus for scientific visualization activities at GRC. Its purpose is to act as a port-of-entry for advanced visualization systems, a site for user-accessible hardware, and a studio for production of scientific visualization-based videos and multimedia.

The GVIS lab facility includes an integrated configuration of high-end graphic workstations; analog and digital video recording, editing, conversion, and duplicating equipment (including HDTV); and specialized equipment for exploring immersive virtual reality. The lab maintains a channel on the GRC closed-circuit TV network (the GVIS Channel) to support display of visualization work to remote locations within GRC.

The GVIS staff develops custom visualization and image analysis applications, assists in recording visualizations developed by end users, and provides support for visualization software which is used by customers. This support includes acquisition, enhancement, consultation, and application development using that software. Other services provided by the lab include: multimedia production, 3D modeling, image analysis, combining computer graphics and video, applications of HDTV and digital television, and virtual reality and advanced I/O applications.

One of the facility's services is to provide for recording and animation from any of the GVIS-supported platforms (SGI, Windows, Mac, NT) within 24 hours of request. This, in combination with supporting other special animation and visualization requests, requires that the facility remain highly flexible, often reconfiguring its equipment and software based on individual project needs. Often, technical customers of the GVIS lab will develop visualizations on their personal PCs or UNIX workstations, and when it is ready to be recorded, run the applications on GVIS lab platforms. Therefore, having access to shared licensed software and shared file systems is critical.

In addition to using graphics and visualization software, the GVIS lab staff also provides support for several software products to its customers. Because it is impractical to provide a high level of support for all such tools, varying levels of support are provided based on the number of expected customers and degree of criticality those packages have to GRC missions. Full support implies maintaining expertise to diagnose problems, recommend techniques, develop tools and scripts to facilitate usage, and providing supplemental documentation as needed. Partial support implies maintain sufficient awareness of the package's capabilities to provide consultation on its applicability for a given problem. The following table lists the current packages, level of support, and associated support elements:

TABLE 1

Purpose	Packages	Level of Support
General Purpose Graphics	PV-Wave, MatLab	Full
	TecPlot, VTK	Partial
Scientific Visualization	EnSight	Full
	AVS	Partial
Flow Visualization	FAST, FieldView	Full
	Visual3	Partial

The customer base for scientific visualization at GRC consists of both a technical and non-technical population. The technical population can be further subdivided into about 500 individuals that merely access tools that the Computer Services Division (CSD) provides or require occasional consultation, and about 100 individuals that have requested personalized solutions and services that have required varying amounts of efforts. Both groups have the tendency to increase during the summer through internship and fellowship programs.

The technical population represents a variety of fields with a heavy emphasis on visualization of computational flow derived from structured and unstructured grids, structural mechanics, and microgravity combustion imaging experiments. Most of the technical population has a working knowledge of programming and digital techniques, the application of visualization in their field,

but only an introductory knowledge of digital multimedia (e.g., graphic formats, video technology, etc)

The non-technical population represents public relations personnel, educators, and the occasional local press and media.

Since the GVIS lab uses Unix, PC, and Mac platforms in a networked environment, with IDE capabilities on the PCs and Mac, the standard services for those platforms are utilized (e.g., Central Domain Name Service, Central Simple Mail Transport Protocol Service, Central File Transfer Protocol Service, Central UNIX Userid Management Service, Integrated Print Service, and Integrated Desktop Environment, etc.) In addition, there may be special requirements or interactions with other services.

4.1.9.1 Logistics Services

The LTID IT/Server environment is comprised of several servers that provide a suite of custom and specific applications required for LTID to service the GRC community. Library servers host several one-of-a-kind journals and subscriptions critical to the GRC research community. Publishing servers host large specialized format poster printers .

The current environmental requirements include technical support, in-house expertise, and immediate server access to the custom applications that are the backbone of the Logistics and Technical Information Division.

4.1.9.2 Application: Aperture

Functionality

- Computer Aided Facilities Program.
- Merges a database of drawings with associated MDLS and FUS data.

4.1.9.3 Application: MetaFile

Functionality

- Document imaging system, utilized in the Property Management Office.
- Equipment control source documents are scanned and indexed utilizing MetaFile.
- Images are archived to CD-ROM.
- End-user can query the SQL database then view images from workstation.

4.1.9.4 Application: Labmate

Functionality

- Instrument calibration software which tracks the calibration of equipment.

4.1.9.5 Application: MetCal

Functionality

- Calibration procedure software.

4.1.9.6 Application: Material Tracking System

Functionality

- A transactional Active Server Page (ASP) that captures, validates (using JavaScript), then updates an SQL database backend. Additionally, the end user can query the database by entering parameters to display the query results to the end-user.

4.1.9.7 Application: Hold Storage Application

Functionality

- This application provides the end user the ability to query and view descriptive information and images of items maintained in Hold Storage.

4.1.9.8 Application: Aperture Smart Picture Server

Functionality

- Proprietary, one-of-a-kind Web interface application to Aperture Smart Picture data.

4.1.10 Network Time Services

The Network Time Protocol (NTP) is the Internet Protocol (IP) network service that provides the mechanism to synchronize computer time and coordinate time in a large, diverse environment. Accurate, reliable time is necessary for applications requiring multiple, concurrent, real time access to information over a distributed, networked resource environment. Well known applications requiring this synchronization service include: financial and legal transactions, dispatch and control, test and measurement, and reservation systems.

The Central Network Time Protocol (NTP) Service at the Glenn Research Center (GRC) represents the top of the time hierarchy in which three (3) workstations are configured as stratum-1 servers. The stratum-1 servers have external time sources connected to them. The stratum-1 servers provide time to the stratum-2 servers (i.e., ntp01, ntp02, and ntp03). In turn, these servers provide the time to all GRC clients. The external time sources being utilized are part of the Central Time Source System. Refer to the environmental description on the Central Time Source System.

4.1.11 Usenet Service

The Usenet (News) Service is intended to provide delivery of Usenet discussion groups to everyone in the Glenn Research Center (GRC) user community. The Usenet Service was primarily established to provide the free interchange of ideas, concepts, and solutions to various topics of interest within and without in the GRC community.

Usenet provides for information interchange by allowing users to subscribe to discussion groups, which can be restricted to GRC users, NASA domain users, or any internet user with access to a Usenet server. Generally groups are defined and created, by majority affirmative votes on the creation or removal of discussion groups, and are propagated via the NNTP protocol defined in RFC 977. RFC 1036 defines the article format. Usenet articles are propagated via multiple bi-directional channels, to other Usenet servers via network connections to ISP's and other NASA centers. GRC is currently using INN, a public domain software package for the server side, and both public domain and COTS software for the end user client desktop interface.

4.1.12 Network File System Services

This service is intended to address the needs of users of the GRC WinCenter Pro Environment (includes UNIX, Mac or Remote Access Service [RAS] users requiring access to Microsoft applications), to automatically authenticate NFS mount requests at the initiation of their WinCenter Pro sessions, or at any point during the session, when an NFS file mount is attempted.

NFS mount authentication within Windows environments is based on a username and associated password. Users authenticate to the service by supplying a user id and password pair in exchange for a UNIX UID number held in the password database on a UNIX host. The UID number is then used by NFS to map network drives. For authentication to work properly, each user id/UID pair has to be unique within the distributed computing environment. This uniqueness is maintained by the Central UNIX Userid Database. For more information on the Central UNIX Userid Database Service, refer to the Central UNIX Userid Database Service environment description document. The Central NFS Authentication for Windows Service is currently running as a PCNFSD daemon on the same system as the Central POP Service. This server was chosen because it is the only location within the GRC environment which maintains a complete list of IDE UNIX, PC, and Macintosh user ids and their password information, as well as a reliable implementation of the PCNFSD authentication protocol. Since PCNFS it is a lightweight, single port protocol, it was decided to run the service off a system which maintains an accurate password database rather than replicate that database on another system.

4.1.13 Integrated Print Services

The Central Integrated Print Service (IPS) provides shared TCP/IP network printing for nearly all of the GRC computer users and allows Windows PCs, Macs, all variations of Unix, DEC VAX/VMS and MVS computer systems to print or plot to IPS supported printers nearly anywhere at the NASA GRC laboratory, the adjacent Aerospace Park complex, or Plumbrook Station. This service uses a standard client server model; all print or plot requests are routed to a print spool server, which then routes the print job to a TCP/IP attached network printer or plotter. This architecture currently supports client printing from Apple Mac, Windows 2000, Windows NT, nearly all variations of Unix (e.g. Sun SunOS Sun Solaris, IBM AIX, HP HP-UX, SGI IRIX, Masscomp, DEC Unix and Linux), and IBM MVS. It also support a wide array of printing and plotting devices.

The CSD Integrated Print Services provides lab-wide TCP/IP based printing and plotting for the NASA GRC general user community, to include both office automation and scientific and engineering computing users. The IPS architecture follows a standard client-server model; a client is either a single computer, such as a Windows 95, Windows NT Workstation, or Apple MAC, or a multi-user system, such as Unix or IBM MVS. The print job is routed to one of two IPS servers, and the IPS server then routes the print job to an IPS TCP/IP attached network printer. Initially, all printing was routed through a single Unix print spool server. When the IDE desktop computing system was introduced and the LIMS Office Automation System was phased out, a Windows NT Server system was added to the IPS system to provide a Microsoft "printing front-end" for the print queues on Windows 2000 clients and WinCenter Pro clients. The Windows NT Server then routes the print job to the Unix print spool server, which contains all of the technical details related to a specific network printer (e.g. the IP address of the network interface, which port to use, what type of initialization commands that need to be sent to the printer or plotter, etc.). The Unix print spool server then routes the print job to the selected network printer or plotter. The IPS production servers are located on a separate subnet in order to isolate network traffic and minimize collisions.

An integral component of this architecture is a network device called a "Network Print Server" (NPS). This device allows a printer or plotter with either a Centronics parallel or RS-232 serial interface to become a network attached device that can be accessed from many different types of computers. Due to the variety of network protocols, configurations, and vendor specific software, the IPS task defined a standardized network interface and adopted the Digi Milan series of NPS's as the standard network interface for printers.

4.1.14 Experimental Data Services

The NASA Glenn Research Center and Plum Brook Station have a number of world class experimental facilities. The facilities are used by a variety of Government, educational and private organizations. Direct access from the public is limited. Through the Data System Product Line of the Computer Services Division, an environment for the acquisition and post processing of data is provided to these experimental facilities. This environment, generally known as "data systems", directly supports research and development activities of the Center's specific contributions to the major Aeronautics, Space Transportation and Space Power programs. A significant amount of the data systems resources are dedicated to the support of the Center's primary mission of the development, verification and transfer of air-breathing propulsion technology for subsonic, hypersonic, general aviation, and high-performance aircraft and rotorcraft.

The Data Systems Product Line provides support of the experimental test facilities at GRC and Plum Brook Station. A primary service is the design, implementation and support of real-time data systems (i.e., ESCORT) in the facilities. This service includes: (1) data collection, archiving, and data management of the data recorded in the test facilities; (2) development and implementation of test-specific applications for real-time acquisition and processing on the facility systems; and (3) the development and implementation of applications and services for post-test data processing. The administration of central servers for application development, data processing, and monitoring of data collection and management systems are also included. The

PACE contract, (with RSIS), provides the following support services for the data systems product line: system installation; preventative and remedial maintenance; system hardware upgrades; installation of customer-provided test specific data acquisition hardware and software in the test facility; and administration support for the facility located workstations required for a test.

A number of the test facilities operate in a restricted or limited access mode that requires the data and its associated processing to be performed on the facility located systems. Access from the central data development area to the data systems in test facilities operating in this mode is via a protected limited access network. Future plans for the data systems include the expansion of this protected limited access network to a standardized environment that permits the use of data management and application servers.

The central data collection and archiving activity is supported by the Data Collector Information System (DCIS), which resides on the Experimental Data Server systems. The Compact Experimental Data Analysis and Reductions System (CEDARS), Lewis Data Processing System (LDPS), and Experimental Data Server environments are used in the post-test processing of experimental facility data acquired with the ESCORT steady state systems. PCs and workstations installed locally in the facilities often utilize the CEDARS and LDPS system environments for post-processing of the ESCORT collected data. Web-based interfaces are being integrated into these environments. The central software development area provides systems with equivalent configurations for implementation and testing of these applications.

4.1.15 Central FTP Service

The Central File Transfer Protocol (FTP) Service is intended to provide file transfer services to the GRC community and associated entities, such as other NASA sites, universities and vendors. The service is intended to provide a balance between ease-of-use and security in the transfer of documents and files. It provides an easy, standard method of making files available to a large audience both internal and external to the research center. Because the central service is available it is not necessary for individual system administrators to set up anonymous ftp servers. This helps limit the exposure of GRC to the external network and makes it possible to better control the access. To further protect the GRC environment, there is both an internal and an external service. The internal service is restricted to access to members of the .grc.nasa.gov and grc.nasa.gov domains while the external service is available to anyone.

There are really two separate parts to the Central FTP Service at GRC. First there is the public FTP service which is open to the external Internet. It is intended to provide a conduit for those in the GRC community make files and documents available to those outside GRC. The external service is available from external-ftp.grc.nasa.gov. The second part is the internal or local FTP service. It's purpose is to provide ftp services within the grc.nasa.gov domain and does not allow connections external to this domain. The internal/local service is available from internal-ftp.grc.nasa.gov.

4.1.16 External FTP Service (external-ftp.grc.nasa.gov)

The External FTP Service is really split between the internal-ftp and external-ftp systems. For normal anonymous ftp use, internal customers will place their files on the internal-ftp system via anonymous ftp. These files are placed in the folder pub/anyone/... The files are periodically copied to external-ftp in same relative location pub/anyone/... where they are made available to anonymous ftp users via external-ftp. This was done to allow the external pub/anyone area to be made un-writable by external customers, to avoid abuse, and to protect the files made available this way. Currently a combination of ssh and rsync is used to push the files from internal-ftp to external-ftp on a 5 minute interval. If for some reason the files are corrupted on the external-ftp system they will automatically be restored through this process and any extraneous files will be removed.

The ability to drop off files on the external-ftp server is also limited. As an external user it is expected that connections will be made via anonymous ftp connections. All write access as an anonymous ftp user is blocked except in the folder dropbox. This folder is writable but files cannot be picked up from this area and directory listings are blocked. Once a file is placed in dropbox it is transferred to the internal-ftp server in the same relative area, dropbox. Internal users can then pickup the files from the internal-ftp server as anonymous ftp users.

GRC users can also access the service through various ftp clients and anonymous ftp. In addition GRC may request an account on the server and use an ftp client or other means to move files in and out of the ftp file system. This allows a user to maintain ownership of files and documents placed on the server providing additional security. The ability to put files directly on external-ftp is gradually being curtailed. Instead internal customers will be given access to internal-ftp via authenticated ftp. The files will then be copied to the external server for pickup. This transition is being limited because of the way this aspect of the service is being used. At present some of the accounts on external-ftp have been shared by internal and external users as a way of limiting access to the files passed.

External customers can access the external FTP service by using an ftp client such as ftp or a Web browser such as Netscape. The service can be accessed through various aliases including ftp.grc.nasa.gov, renegade.grc.nasa.gov, and swedishchef.grc.nasa.gov. Generally these aliases have come about because of systems this service has been located on. The alias external-ftp.grc.nasa.gov is the real name for this service. As an external user it is expected that connections will be made via anonymous ftp connections

4.1.17 Central UNIX File, Application, License and X-Windows Services

The Central UNIX File and Application Service (CUFAS) is intended to provide services to UNIX hosts which are most easily implemented on an Enterprise scale via a single large Network File System (NFS) server. The CUFAS provides a point of integration between the UNIX Operating System (OS) Support available at GRC, the applications available to GRC UNIX hosts, data interchange between various UNIX (and other OS) hosts, and the UNIX hosts themselves.

The CUFAS provides read-write (with some read-only) NFS exports to hosts within the GRC DNS domain, via a single large Sun Microsystem server platform with an associated large RAID-5 disk array. Access to data files, aside from restrictions due to file permissions set by data owners, is available to all NFS-capable hosts within the domain and their users.

The major functions provided via these NFS exports are:

Access to UNIX host installation and configuration scripts detailed in the GRC UNIX Guidelines for each centrally supported UNIX hardware platform and OS version.
An exported hierarchy of UNIX applications, configured in such a way as to enable parsing of the hierarchy by the UNIX "setup" mechanism. The "setup" mechanism is a shell-script based tool which, on demand, establishes: required executable path, associated environment variables, and performs ancillary operations to allow the running of applications which reside across an NFS mount, as if they were locally installed.
A globally read-write temporary file system to allow data interchange between UNIX hosts, and between the GRC WinCenter Pro Interoperability environment.
Providing data to the GRC Internal Central Web Service.

An additional role of the CUFAS server is to interface with the GRC Central File Transfer Protocol (FTP) Service, providing the controlling and internal domain components of the GRC Anonymous FTP service.

When a software package is purchased from a vendor it usually comes with a license-to-use the software. For many packages this license-to-use is granted to one individual or one system. Other packages are delivered with a concurrent licensing scheme. This means that a certain number of licenses are purchased and as long the number of users does not exceed the number of licenses at any point in time everything is fine. This can allow a large number of users to share a small number of licenses.

With concurrent licensing the software vendor provides license management software along with their software product. The license management software is run on a license server, i.e. one of the Central UNIX License Management Service systems. When a user starts the software package the software contacts the license manager and requests a license. If there is one available it is issued to the user. The license remains under the user's control as long as he is running the package. When the user is finished running the software the license is returned. Usually periodic communication is maintained between the software and license manager in order to verify that the license is still in use.

The License service provides constant monitoring of the license managers being supported by the service. If for some reason a license manager were to stop functioning the License Service restarts the manager within 5 minutes and an email is sent to the license manager administrator.

The logs generated by the license managers are automatically rotated weekly. The old logs are currently kept for 13 weeks in the gzip compressed format. The logs are shared so that if someone, such as the product administrator or a user, has an interest in the log information it is available.

While this service provides licenses for products distributed through the Central UNIX File/Application Service it is not dependent on it except in the coordination of license information as indicated below. This means the License Service can be used to provide licenses for any application and whether it is installed on a local system or acquired from the File/Application Service. It also means that if the File/Application Service were to go down the License Service would continue to function and supply licenses for users that have a product locally installed.

For some the products the licenses are dated and no longer valid after a time. When some products release a new version new licenses are also issued. Also there may be a reason to change the number of licenses available for a products. For these reasons the licenses must be updated occasionally. Installing or updating the license information is coordinated between the product administrator, the person responsible for the specific product, and the license manager administrator. Often the license information on the license server and the information available to the user must be updated simultaneously. Not all license managers have this issue but some do, in particular FLEXlm.

The Central X Window System Service is used by Glenn Research Center (GRC) personnel for operational support of X Window System terminals (X Terminals). X Terminals are used at GRC as thin client devices (thin client devices being network graphic display devices with no local hard disk) providing access to network-based applications in multiple operating environments including DEC VMS, UNIX, and MS Windows. About half these devices are currently used as graphics displays for GRC experimental test facilities data systems (ESCORT data system). In the UNIX operating environment, they are used as graphic display devices for mechanical engineering design and analysis applications. In the MS Windows environment, X Terminals provide remote display capability for MS Windows application programs executing on the Central Multi-User NT Server. A description of the Central Multi-User NT Server can be found in the Integrated Desktop Environment (IDE) environment description document.

The Central X Window System Service also provides access to PC integration software products by Hummingbird Communications Ltd. (HCL Exceed, HCL NFS Maestro, and HCL Exceed 3D software). These software products provide expanded interoperability with other compute environments, such as UNIX, by providing X Window System display and Network File System (NFS) services for the institutional office automation desktop environment known as IDE (Integrated Desktop Environment - IDE). A description of the IDE can be found in the Integrated Desktop Environment (IDE) environment description document.

This service also provides consulting on use and configuration of the X Window System for the Glenn Research Center computer user community.

The services provided by the Central X Window System Service are focused on providing operational support, remote configuration management, software update service, software distribution, problem resolution, and consulting for network display devices. The network display devices utilizing these services are X Window System terminals and GRC office automation desktop clients (IDE PC) running X Window System server software. These services are supported by two Digital Equipment Corp. Alpha workstations and an IDE PC. One of the

Alpha workstations is acting as a primary X Window System server system, and the other as a backup when the primary is out of service. The IDE PC provides network installation support and configuration management for the HCL software products. The Central X Window System Server Service is also responsible for the daily system administration needs of the X Window System Server systems.

Operational support is further defined as providing boot and font service for X Window System terminals. The boot service is accomplished by downloading the X Window server code to the terminal via a network tftp file transfer. Remote configuration is performed during the initial boot process, and font service is established with the X Window System font server (fs). Boot and font services are currently provided for three different X Window System terminal vendors - Network Computing Devices, Inc (NCD), Tektronix, Inc. (Tek), and Human Design Systems, Inc. (HDS). For X Window terminals used in GRC experimental test facility data systems (ESCORT displays), operational support is modified to met the specialized operational needs of the environment. Most GRC experimental test facilities operate in a secure mode by limiting their network access to devices used only in the test facility. They do not utilize the general GRC campus network services. Therefore, operational support of display devices used in experimental test facility data systems consists of initial configuration for stand-alone boot and font service (flash memory configuration).

4.1.18 Systems and Support

These application services run on a combination of centralized servers in a Data Center and distributed servers. Most of the servers are currently managed via the ODIN contract, whether acquired as a distributed server seat or on a server in the central Data Center.

4.1.19 Facilities

This component utilizes both a portion of the Data Center facility (room 160, Research Analysis Center) and distributed servers located in the customer location.

4.1.20 Technology Flashpoints

A common issue for many of the specific services is that since the service often is focused on a specific vendor product, it is not at all uncommon for the product to run on only certain hardware platforms. A mitigating force for this problem is that Glenn has broadly implemented the ICA client/WinCenter Pro server architecture so that at least Mac and UNIX desktops can access Windows-based applications when the service provider so chooses. Likewise, centrally provided X-Windows services are often available for application sharing in some other instances.

4.1.21 Data Center Component

The GRC Data Center consists of portions of room 160 in the Research Analysis Center (building 142). This is a secure, raised-floor, environmentally controlled, power redundant facility that used to house the Glenn mainframes, supercomputers, mass storage devices, and numerous special purpose systems. Today, besides the mission focused special purpose systems,

the general infrastructure support provided is essentially limited to the central mass storage system and GFE space for hosting some ODIN provided server seats. The central Mass Storage System has two components – a central mass storage and archival system called CMASS and a network attached storage system called NAS providing online file storage system without archival capability. There are no other Office Automation, IT Infrastructure, and Telecommunications Data Center elements to the Computing Services segment at Glenn. Many of the Communications Services segment capabilities are either in the same building or in the same room of Building 142.

4.1.22 As is Condition

The Mass Storage Services (MSS) at the NASA Glenn Research Center (GRC) provides Network Attached Storage (NAS), data archival, backup, and restoration services. The customer base includes centrally-managed and departmental servers, Unix workstations, and desktop systems. The Glenn MSS storage architecture is distributed, providing "network close" virtual storage to remote systems through the Distributed Storage Service (DSS) combined with very high capacity storage provided by Central Mass Storage Service (CMASS).

The UniTree software, Central File Manager (UCFM), is the storage machine (engine) licensed from UniTree Software Incorporated (UTSI) which is based on the IEEE Mass Storage Reference Model, Version 4. The UCFM runs as a user-mode application and is available for a variety of Open Systems. The UniTree software implements a NFS interface, which allows it to be mounted as a UNIX-based remote file system. While the UniTree file system could also be exported to other systems remotely, it is only available locally on CMASS. High performance file transfers with CMASS are performed through the UCFM FTP daemon, uftpd. User access to CMASS through interactive logins and remote shell operations are restricted to file management functions. A custom rcp (remote file copy protocol) implementation for UniTree was provided by Convex Computer Corporation as part of the initial CMASS configuration. The availability of rcp and the remote shell commands has allowed Glenn researchers to make use of CMASS as an automated back-end data repository to numerous high capacity data processing applications.

In the current configuration at Glenn, the UCFM is running on a Sun Ultra Enterprise 3000. The system transfers an average of 100-200 GB/day with an accumulation of 6,000,000 files and 30TB of data. A disk cache of 250 gigabytes (GB) of high-speed magnetic disk is used to provide transparent access to 200GB rewritable optical disk in a Hewlett Packard SureStore Optical Jukebox and over 50 terabytes (TB) of magnetic tape in automated libraries from Storage Technology Corporation (StorageTek, STK) and ATL Products. The STK library provides approximately 6,000 ½” tape cartridge slots, eight 4490 drives, and two Redwood (SD-3) drives. The ATL StoreLink library provides 704 tape slots and seven DLT-7000 tape drives. A second ATL library with 264 tape slots and three DLT-7000 tapes drives is allocated to the test system and is available as a backup to the production ATL library. All migrated files are written to two separate tape volumes. One volume is retained at the Resource Analysis Center and the other is transported to offsite storage. The repacking facility of the UCFM allows sparsely filled data tapes to be consolidated to similar or new media types as required. Additional technical

information, including the administrator and user guides, and the man pages, are available from the UTSI web site: http://www.unitree.com/techinfo.htm.

The DSS systems transparently provide the users with networked-attached random access to their data. The protocols supported include the Network File System (NFS), Server Message Block (SMB) and AppleShare. NFS is the file system protocol developed by Sun. NFS is available on most Unix systems and as an add-on for Personnel Computers (PCs and Macs). SMB is the file system protocol developed by Microsoft and bundled as part of Windows 95 and Windows NT. AppleShare is file system protocol developed by Apple and bundled as part of the MacOS operating system. All three of these protocols include internal file access methods (e.g. open, seek, read, write, etc.), which allow random file access. Support for SMB and AppleShare is provided by a software product from Syntax, the TotalNET Advanced Server (TotalNET). TotalNET is licensed separately on each of the DSS servers on a per-seat basis.

The DSS and CMASS services are integrated through the use of VERITAS Enterprise Extension software, which also performs HSM. This software transparently moves files from the DSS systems to CMASS using the File Transfer Protocol (ftp). Files are selected for migration based on their access time and size. Once a file has been migrated it becomes a candidate to be purged. Purging occurs when the free space on the file system falls below a preset threshold. The use of the HSM software provides virtually unlimited file system sizes. Additionally, it reduces the backup load by requiring that only the databases and the un-migrated files be backed up regularly to prevent data loss.

The central backup and restoration service is based on the VERITAS NetBackup software. NetBackup provides high performance backup, archiving, and recovery services for UNIX, NT and PC clients using a client/server network to provide a enterprise-wide scaleable solution. A single master server is used to schedule periodic backups on client systems across the network. The master then delegates the actual client backup to one of a cluster of slave backup servers. Each of the clients is placed into one or more classes. A class consists of one or more clients that has similar backup needs. The administrator can then configure backups for the entire class rather than having to manage each client individually. The class list definitions are stored in a configuration database on the master server. The administrator can then configure the properties of class including the client list, file list, schedules, storage units, volume pools, and class attributes from a central management console. Most backups scheduled at regular intervals or can be initiated by the administrator or user–directed. User-directed backups can be configured to have different retention periods from automated backups. An archive is a special class of a backup. NetBackup first backs up the selected files and then deletes them from the client disk if the backup was successful. The retention period for archives is therefore typically infinite to allow the data to be restored at any future date. The NetBackup storage units can be tapes, optical disks used as a raw device, or a UNIX directory on a magnetic disk. The tapes and optical disks can be robotic or non-robotic.

In the GRC MSS implementation, the Enterprise Extension (HSM) file systems on the central NetBackup servers are used as storage units. This allows the CMASS UCFM to be used to manage the optical disk and tape libraries for NetBackup indirectly through the Enterprise Extension. VERITAS HSM and NetBackup are designed to be aware of one another. For scheduled backups and user-directed backups by a root user, NetBackup backs up only the

migration information for files. Neither the data itself is backed up nor is data retrieved for migrated files. For user-directed backups by nonroot users, the file is first cached and then it is backed up. Since all of the DSS servers are using VERITAS HSM for the user file systems, this reduces the backup load on them significantly. The HSM can also use NetBackup as a migration method so that large numbers of small files can be migrated in larger chunks. NetBackup allows storage units to be fragmented into smaller units. This allows NetBackup to skip to specific fragments before starting to search for a file. For HSM-migrated units, it also allows NetBackup to restore from selected-fragments without having restored the entire storage unit. Additionally, since the HSM component is used to migrate the files to CMASS, it can start migrating the backup stream as soon as the first fragment is completed rather than waiting for the completion of the stream. This reduces the intermediate disk cache requirements on both the NetBackup server and on CMASS.

There are five remote DSS systems (Beech, Buckeye, Cypress, Elm, and Willow), and four central NetBackup servers (Cherry, Dogwood, Oak, and Palm), one of these also functions as the NetBackup master and central DSS system (Oak) and one test system (Pinoak). All of these are Sun workstations or Sun servers running either Solaris 2.5.1 or 2.6. The functions and general specifications for these systems are given in Table 2.

TABLE 2 - GENERAL SERVER CHARACTERISTICS

Server List						
Bldg	Name	Function	Type	OS	NFS Clients (USERS)	Allo/Tot GB
500	Beech	DSS	Sun Ultra2-1200	Solaris 2.5.1	66	90/140
5	Buckeye	DSS	Sun Ultra2-1200	Solaris 2.5.1	150	35/36
142	Cherry	NetBackup	Sun SC2000	Solaris 2.6	1	112/120
142	CMASS	UCFM	Sun E3000	Solaris 2.5.1	(600)	278/305
86	Cypress	DSS	Sun Ultra2-1200	Solaris 2.5.1	130	32/42
142	Dogwood	NetBackup	Sun SC2000	Solaris 2.6	1	116/116
54	Elm	DSS	Sun Ultra2-1200	Solaris 2.5.1	75	36/60
142	Oak	DSS/NetBackup Master	Sun SC2000	Solaris 2.6	160	65/80
142	Palm	NetBackup	Sun Ultra2-1200	Solaris 2.6	1	60/60
142	Pinoak	Test	Sun Sparc10	Solaris 2.6	1	12/12
142	SAM	STK ACSLS Server	Sun Sparc5	Solaris 2.4	0	4
77	Willow	DSS	Sun SC1000	Solaris 2.5.1	150	46/58

The NetBackup client component is currently in use on 208 Unix systems and 44 Windows NT systems. NetBackup is also used on the DSS systems to backup un-migrated files from the HSM file systems. The current number of NetBackup client systems at GRC are shown in Table 3.

TABLE 3 - NETBACKUP CLIENTS

OS Type	NetBackup Clients
AIX4.2	2
HP-UX10.20	2
IRIX5	7
IRIX6	96
OSF1	3
Solaris2	11
Solaris2.5	21
Solaris2.6	65
SunOS4	3
MacOS	0
WindowsNT	44
Grand Total	254

The GRC Network Attached Storage Service is type of file storage system that uses a technology called Network Attached Storage (NAS). This type of device is analogous to the evolution of a network router. In the early stages of the development of the Internet, a 'router" consisted of a Office Automation, IT Infrastructure, and Telecommunications computer with two or more network interfaces connected to two or more separate networks, and supported one or more network protocols. In time, vendors developed specific hardware devices dedicated to network traffic routing. These hardware devices included the ability to support different network interfaces, different network protocols, included a customized internal operating system, and were optimized for network traffic routing. A NAS is a device that has followed a similar evolution. A file server is part of a standard 'client/server" model; it usually consists of a general-purpose computer with a large amount of disk space. Portions of that disk space are made available over a network to specific clients and users on those clients. It also can support different operating system file formats or file access protocols and network protocols. Like a router, a NAS is a specialized computer system that is dedicated to providing optimized network file services. Different manufactures of NAS devices provide many different features in their specific products, and these features range from just providing the basic functions to providing a great deal of redundancy, backup capabilities, or automatic cloning to another NAS.

Specifically, this system uses a Network Appliance Filer model F-820 with approximately 3-TB of raw disk storage. It is intended to provide network file services for approximately 4500 TCP/IP networked clients on the NASA GRC LAN. There are two general types of clients: 1) Microsoft Windows 2000 computers that access the NAS via the SMB/CIFS file access protocol over a TCP/IP network 2) Unix computers that access the NAS via the NFS file access protocol over a TCP/IP network. Metrics for this system are defined according to the Service Level Agreements specified in the NASA GRC ODIN-R Delivery Order for Backup Services as specified in the ODIN Master Contract.

The main system is comprised of the following components, all supplied by Network Appliance:

a) A Network Appliance model F-820 filer "head" or processor chassis

b) Network Appliance internal operating system is currently using "DATA ONTAP version 6.1.1"

c) (1) one DS-14 disk chassis with (7) seven 72-GB disks
(1) one DS-14 disk chassis with (14) fourteen 72-GB disks
(2) two FC-9 disk chassis with (6) six 72-GB disks
(2) two FC-9 disk chassis with (5) five 72-GB disks

d) equipment mounting rack and power distribution

The system also includes (1) one ADIC FastStor LTO 7-slot tape stacker system for disaster recovery purposes.

The primary usage of the NAS at this time is to provide network file server support for the NASA GRC Microsoft Windows 2000 environment, and a single NAS CIFS volume was created for this usage. User credentials are derived from the NASA GRC Microsoft Windows 2000 domain controllers for the "grc" domain. The NAS is also joined to the NASA GRC “grc domain”, and the Windows 2000 domain controllers maintain the user accounts. The Windows 2000 domain administrators, who also set the permission levels for each user folder, create user folders on the NAS. The primary purpose of this CIFS volume is to provide storage for the user’s “mydocs” folders, but it also provides user profile storage and a common point for NASA GRC Windows 2000 applications distribution. There are currently approximately 3,500 user folders on the specified CIFS volume. There are no active NFS volumes for NFS users at this time, but this service will be provided at a later date. Currently, the designated system administrators only use NFS access to administer the NAS.

4.1.23 Data Center Servers

Several servers of several types are physically housed in the Data Center.

4.2Systems description and Operational Concept

4.2.1 System Interfaces

Customers can be joined to DSS or the CMASS services or both. DSS provides random remote access to files at the command and program level through NFS, SMB and AppleShare and sequential access through RCP or FTP. The DSS servers use HSM to migrate files that meet size and reference criteria to CMASS. The criteria depends on the activity on the server. For example files that have not been referenced in the last week larger than 100 KB are sent to CMASS and the data is removed from the server. The user can recall the data by simply referencing the file.

CMASS only provides sequential access methods through FTP and RCP.

NetBackup stores files on the HSM file systems that reside on the NetBackup servers. The HSM software then uses FTP to transfer the backups to CMASS. The master server for Netbackup automatically schedules backups. There is a GUI interface for restoring all or any part of the backup data.

The ubackup is generally scheduled through a cron entry on the workstation and uses a modified version of rcp. Restoration of the data uses the modified rcp piped into either SGI bru or cpio.

4.2.2 Service Abstraction Requirements

The DSS servers and CMASS system have been designed to provide NFS, ftp and rpc access to both the DSS servers and the CMASS system, as well as a backup service for Unix workstations and NT servers. The design was implemented using Standard Off the Shelf products. The products chosen were Veritas's HSM and NetBackup for the DSS servers and UniTree Software Inc.'s UniTree.

The requirements included ease of use, minimal training for end users and a reliable storage for backups as well archived data. In addition there were to be no quotas for users. A standard system configuration of both hardware and software was selected for ease of maintenance.

Administration for the DSS servers was split between the MASS Store team and local administrators. Those items related to end user functions were assigned to the local administrators through the use of osh. Those related to software and hardware were handled by the MASS Store team.

4.2.2.1 Processes and Concept of Operations

The internal workings of the electronic data backup and archive systems at GRC are described in Glenn Research Center Lower Level Procedure No.: LeR-P7100.008: Information Storage, Retrieval, & Archive. An overview of these processes is given below.

File System Interface to Archive Service

- Customer obtains a DSS account from CSD
- Customer uses NFS, SMB, or AppleShare file system interface to move or copy archive objects to DSS
- DSS HSM software migrates archive objects to CMASS
- CMASS preserves archive objects indefinitely until explicitly removed by customer

FTP or RCP Interface to Back-End Archive Service

- Customer obtains CMASS account
- Customer transfers archive objects to CMASS using ftp or rcp

- CMASS preserves archive objects indefinitely until explicitly removed by customer

IDE PC Backup Service

Central and IDE Administrators install and configure backup client on IDE "H" drive servers

Customer stores data on IDE server "H" Drive. For more information on IDE, refer to the Integrated Desktop Environment (IDE) environment description document.

- Unix Server/Workstation Backup Service

  Central and local administrators install and configure backup client
  Customer stores data on a Unix file system configured for backup

- Backup Server Process

  Backup server scheduler initiates full and incremental backups
  Backup client collects and transmits backup objects to DSS staging area
  Backup objects migrate via HSM from DSS staging area to CMASS
  CMASS preserves backup objects for three months (including off-site replication)

HSM and Backup Server Administration

- On a Daily Basis

  Monitor logs
  Clean up obsolete files
  Respond to checking scripts

- On a Weekly Basis

  Check databases

- On a Monthly Basis

  Generate monthly accounting report

- On an As-Needed Basis

  Apply patches
  Upgrade software version level
  Respond to system error/fault events
  Add new accounts

Tape Management

- On a Daily Basis

Ensure tape robots contain adequate free tapes
Monitor logs
Respond to user requests.

- On a Weekly Basis

  Transfer “copy” tapes to off-site
  Validate tape map

- On a Monthly Basis

  Generate capacity utilization report;
  Check CMASS HSM database
  Copy CMASS HSM database and transfer off-site

- On an As-Needed Basis

  Order media
  Respond to errors/faults
  Update software
  Respond to user requests

Restore Process

```
If Restoring Archive Object Then
   If Archived via File system Interface Then
       If Multiple files need to be restored Then
           Customer Issues Multi-Stage command
           Customer waits for Stage to complete Endif
        Customer accesses file(s) via file system
         GoTo Fetch Process Else
      Customer issues ftp or rcp fetch command
      GoTo Fetch Process Else
If Restoring Backup Object Then
       Customer executes Backup Client
       Customer selects files to restore
       GoTo Fetch Process Endif
Endif
End
```

Fetch Process

```
If requested file(s) exist in Automated Robot Library Then
   System delivers file(s) to Customer
Else
System event signals central administrator
```

Operator loads tape into robot
Central Administrator signals system
System delivers file(s) to Customer
Endif

The Network Attached Storage system is intended to provide backup and restore services for approximately 4500 TCP/IP networked clients on the NASA GRC ISN. Initial backup capacity is to be approximately 30 TB. Backup retention and response metrics according to the Service Level Agreements specified in the NASA GRC ODIN-R Delivery Order for Backup Services as specified in the ODIN Master Contract, section E.3.1.16.

The system is comprised of the following components:

- Sun Microsystems Ultra Enterprise 450 with two 480 MHz UltraSPARC-II processors, 4 GB of main memory, 3 power supplies (1 redundant), 10 internal 36 GB disks, gigabit Ethernet, three fibre channel interfaces, video monitor and Solaris 8 Operating System

- Andataco RAID disk cache with 100 GB of disk and redundant power supply

- ADIC Scalar 1000 LTO Tape Library with 100 base-t Ethernet,188 tape slots, three fibre channel interfaces, 6 LTO drives with a maximum tape capacity of 37 TB

- ADIC 200D LTO tape drive

- IBM Tivoli Storage Manager (TSM) server and client software

The system is connected to the NASA GRC Internal Services Network (ISN). There are no Solaris user-level accounts. All logins are for administrative purposes via encrypted ssh sessions from the NASA GRC ISN.

4.2.3 Systems and Support

The system is operated by the ODIN contracting organization, Affiliated Computer Services (ACS).
The system operates 24x7, except for scheduled maintenance periods.

4.2.4 Facilities

The systems are resident in a portion of room 160, building 142.

4.2.5 Technology Flashpoints

4.2.6 Open Problems

- The remainder of the ubackup clients that are supported under NetBackup need to be converted.
- Currently any load balancing for NetBackup must be done by hand, an automatic or software suggested function is needed.
- Better integration between NetBackup and Enterprise Extension is required.
- Better integration between Enterprise Extension and UniTree is required.
- The feasibility of using a remote automated library, which can be used to supplement or to replace the Plum Brook shelf storage needs to be evaluated.

4.2.7 Limitations

- Research data is often stored in individual user accounts. We need a corporate-level data storage environment where important information is stored independent of individuals.
- The current method of organizing and locating data is restricted to UNIX hierarchical directory structures and file permissions for access control.
- Metadata is required in order to manage archived files.
- Standardized application program interfaces (API) to storage systems are needed for operations such as staging, retrieving, and moving data reliably under program control. Other higher level operations include extracting metadata from files as they are stored, grouping of related files, and rearranging data improve access characteristics.
- Improved system management tools are needed to analyze, control, and optimize the operation of the system and the media.
- Transaction information, such as the start- and end-time, user id, client node name and file size for each transfer, should be logged. Summary information should include the number of files stored, the number of files retrieved, and the total amount of data stored and retrieved for each user. This data is needed for both reporting system usage information and as an aid to system administrators.
- A mechanism for automatically migrating the archive data to new media is needed. For those tapes that are infrequently referenced, a sniffer that identifies deteriorating media

should be provided. The site manager should also be able to set in motion a slow migration from an old media type to a newer one.

4.2.8 To Be Condition

Improvements to the mass storage services to address open issues and limitations have been proposed for several years, but sufficient funding has not yet been identified, so there are no firm upgrade plans in place at this time.

4.3 Communications Segment

4.3.1 Wide Area Network (WAN) Component

The GRC Wide Area Network (WAN) environment consists of two primary ISPs. AN OC-3 connection is maintained to NISN's Standard IP service (SIP). Bandwidth is limited by NISN based upon GRC usage. The other GRC ISP is a DS-3 through OARNet. The OARNet circuit and the NISN PIP service are peered via BGP with a redundant web cache.

GRC also maintains one OC-3 each to NISN premium IP (PIP), NREN, and NISSU (a.k.a. NASANet). The NISN PIP service is bandwidth regulated based on usage.

4.3.2 Production Network Diagram

Figure 11, GRC Network

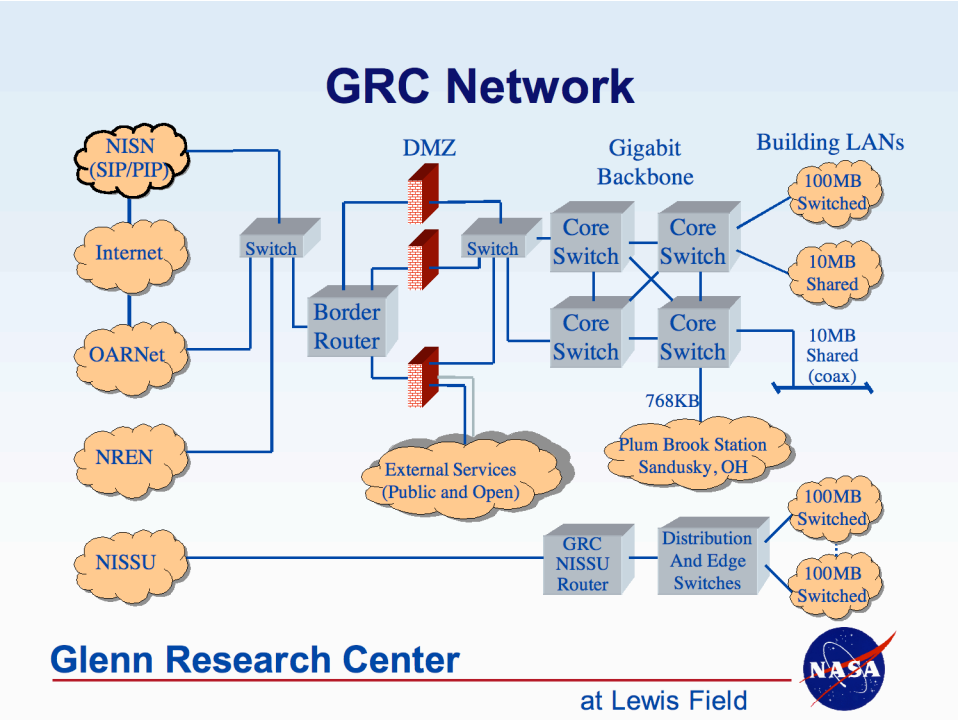

4.3.3 Local Area Network (LAN) Component

4.3.4 Introduction

The Glenn Research Center (GRC) Local Area Network (LAN) component includes: Central Firewall Support, Central Intrusion Detection, Central Domain Name Services, a Global UNIX Userid Database, a campus backbone cabling infrastructure for inter- and intra-building connectivity, a prototype wireless network, remote access services, virtual private networking services, and an external services network. These services provide a broad set of functions in a secure environment.

4.3.5 As Is Condition

The Center network consists of a backbone inter-building infrastructure, an intra-building infrastructure, with the firewall, intrusion detection, external services network and other services connected.

The cabling infrastructure is utilized by all of the various communication systems at GRC. Voice, video, and data networks all utilize cabling installed in common pathways between buildings, throughout the whole Center.

The LINK (Lewis Information Network) System is a communications utility intended to provide video, broadband local area network (LAN), and some point-to-point data traffic to the GRC community.

A Wireless Local Area Network has been set up in buildings 142 and 3. This is part of a wireless pilot initiative aimed at mobile computer users. Users have access to network resources just as if they were "wired" to the network. Users are currently testing the wireless network to see if it fills their mobility needs.

The firewall is the cornerstone of the network security technical solution to mitigating network vulnerabilities and addressing a number of host vulnerabilities that are commonly exploited via this network connectivity. All traffic to or from GRC must pass through this service for it to be an effective security measure. Our current firewall is a collection of devices that create a service known as "the firewall". The particular implementation chosen uses the firewall design principle: that which is not expressly allowed, is forbidden.

Network Intrusion Detection is a critical component of the technical solution to mitigate network-based vulnerabilities. It supplements other network security systems such as firewalls, providing a layered defense, and reducing the residual risk. Additionally, it aids in identification of host-level vulnerabilities which, once addressed, adds another layer of defense.

The UNIX Global Userid Database is a central location for accessing and storing UNIX UID numbers. Centralized UIDs are key to the use of the Network File System (NFS) which allow users on one system to share files on another system.

The Remote Access Service system was implemented to help facilitate the exchange of information between the GRC and personnel working in remote locations. Through the use of the Public Switched Telephone Network (PSTN), it enables authorized personnel to establish a telecommunications link between their computer system/modem and the Glenn computing networks, making the computer appear as a host node on the networks. Secure access is ensured through authentication using RSA SecureID tokens.

VPN technology provides a secure pathway through the GRC firewall and offers users an alternative to conventional dial-up (RAS) when connecting to the Glenn network. Since the users are able to authenticate from any ISP or outside network, VPN technology offers flexibility for Glenn personnel to access protected GRC resources while on travel and to collaborate with users outside the Glenn Intranet environment.

It is within the scope of GRC's mission to provide information to the public (i.e., individuals outside of the Center.) However, providing external access to the information and services within the GRC infrastructure can provide increased risk to those resources. By segregating these services and providing increased monitoring and protection, information can be provided while reducing risk to those services. It is the goal at GRC that any information or service being offered to the public will reside outside of the GRC internal/private network on the External Services Network (ESN). For the protection and availability of data, it is intended that the original data will reside within the internally-protected infrastructure of GRC, with only a copy of that information being made available for public use.

4.3.6 Systems Description and Operational Concept

The physical cable within this infrastructure is a combination of copper, coax, and fiber. The cable infrastructure is utilized for the distribution of all forms of communication systems, as well as other systems.

The network consists of 4 Ethernet switches communicating to each other at 1Gigabit full duplex. In turn the local building ethernets, special networks (described in the Special Purpose Network Environment Description), and WAN interfaces with the outside world are attached to these switches. Building uplink speeds range from 10Megabit to 1Gigabit depending upon user needs and building infrastructure. The entire network is managed and maintained through the GNOC (Glenn Network Operation Center).

Single mode fiber optic cable is the connection media. The switches are located in key buildings throughout the Center. From this core set of Ethernet switches, connections are made to the LAN switches distributed throughout Glenn Research Center (GRC). Each core switch is connected to two different switches in a "full mesh" configuration, for redundancy purposes in case of a failure of a link. Again, fiber is utilized as the connection media. Other devices used for network management are also connected to the core switches, usually attached as a single attached. Attached to each switch are multiple networks. The majority are Ethernets servicing the various building networks. These building networks can be: 10base2, 10base 5, 10baseT, or switched 10/100baseT. For 10/100baseT, the majority are switches, although there are some concentrators.

The wireless network consists of access points (radio communication devices) and cards on client laptops. The access points are connected to each buildings local Ethernet.

The firewall sits between the WANs and the GRC Intranet. All external networks terminate at a router or switch and provide the demarcation point for that provider. These external connections are then attached to one of two switches that in turn connect to an Ethernet interface on the external router of the firewall network. One switch is for NASA wide-area networks with limited participants (NISN-Premium, AERONET, and NREN) and the second is for Internet connected networks (OARNET, NISN-Standard). Different policies are implemented based on this physical separation and routing between the two interfaces is disabled to preserve the integrity of the networks with special communities of interest.

DNS services at GRC are divided into Internal and External (Firewall) DNS services for the purposes of security and performance. The Firewall DNS resides on 2 systems, a primary and a secondary server, which are installed in the GRC Firewall network. This service provides the Internet view of GRC hosts and as such, a number of pieces of information are either modified or not provided at all.

There are two primary components to the Intrusion Detection Service, the network sensors and the data correlation and analysis facilities. The network sensors are currently concentrated on the interface between the GRC Intranet and the WANs. The IDAT correlation and historical

analysis application significantly enhances the capabilities of the GRC Intrusion Detection service. This locally developed product extracts relevant information out of the sensors and other pertinent log information (Remote Access Service (RAS) logs, Virtual Private Networking (VPN) logs, router logs, TCP Wrapper logs, Windows NT Event logs, etc).

The Global UNIX UID Database is accessed exclusively through a front-end database access script which accepts input from the userid management scripts. This access script logs the request and modifies the database as requested.

The VPN technology allows a remote user to run software which will interface to a VPN server installed on the firewall which will authenticate his/her identity. Once the identity is established and the user and host are "trusted", a secure, encrypted gateway across the GRC firewall is opened such that the user can run applications remotely.

The External Services Network (ESN) is a collection of logical and physical network segments with specific and extensive management and operational policies. These network segments are intended to provide public access to Center Information Technology (IT) resources while minimizing the potential impact of the compromise of ESN systems on other IT systems in the Glenn environment. Public access is defined as network availability of a Glenn system or service to hosts which reside outside the physical boundaries of the Center. It also refers to persons that are not exclusively government personnel or members of organizations that have an existing contractual obligation to follow GRC policies and procedures. Policies are separately defined for both GRC internally initiated requests and Public externally initiated requests for access to the External Services Network, to Public Sites, or to internal networks. The ESN has its own firewall.

Management of the ESN is provided through protocol policy controls and proxy configurations. While each system is afforded only the access required to provide its intended services, a standard set of file transfer, system administration interfaces, and other protocols are available to systems in the ESN, to allow organizations to appropriately design their publicly-accessible services. While system administration may differ from host to host and service to service, each organization providing a publicly-available service shall provide for an aggressive and proactive level of system administration.

4.3.7 Production Network Diagram

The Production Network Diagram for GRC is provided below. As indicated, all connectivity to external networks is mediated by firewalls and border routers.

Figure 12

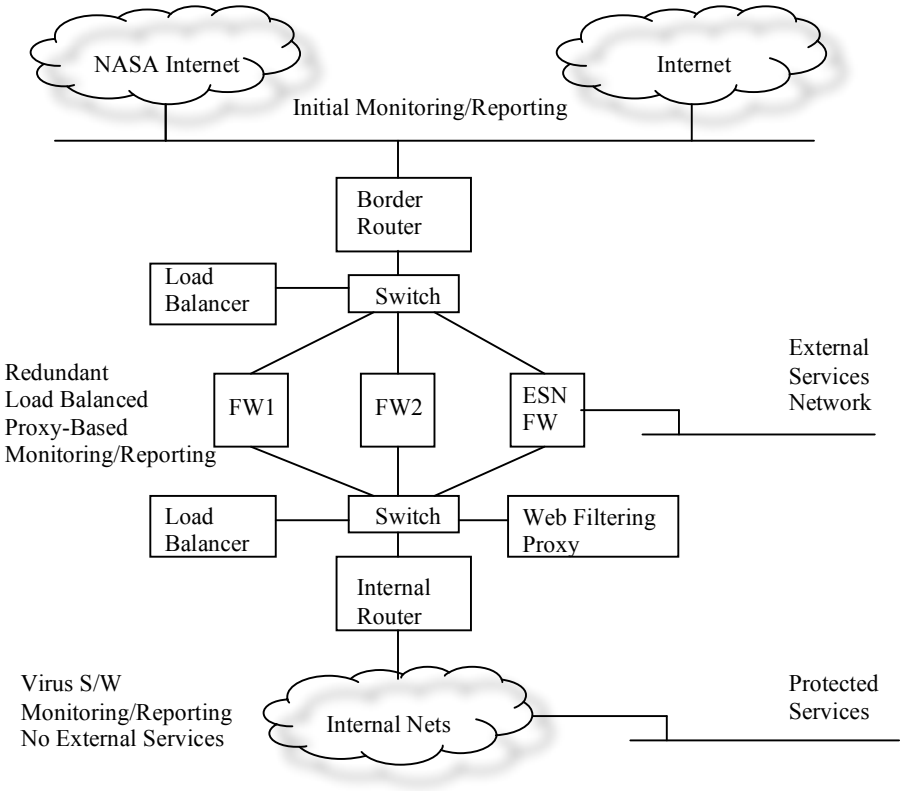

4.3.8 Systems and Support

The LAN and its component parts provide the following functionalities:
Serve as the single point of entry for all GRC incoming and outgoing network traffic.
Allow only required and specific protocols through the firewall. Deny all other traffic.
The components must perform at a level consistent with the bandwidth of the network.
Provide detailed logging and monitoring facilities for near real-time detection of intrusions.
Implement application-layer proxies where possible to reduce the vulnerability of the campus Intranet and internal hosts.
Limit the exposure of the Internal network, the External Services Network and information obtainable by external resources.
A UNIX UserID access script which accepts remote shell calls from root accounts on any UNIX system, checks the query syntax, logs all access requests, and locks/unlocks/modifies database.

Due to the vulnerable nature of the ESN, people who operate systems on the ESN must provide contact information which can address concerns 24 hours a day x 7 days a week. If the system owner deems that they do not require 24x7 operations, in the event of a suspected incident, the system will be removed from the network until the system contact can be reached during normal business hours.

4.3.9 Service Interfaces

The primary service interface for the firewall service is to the Campus backbone infrastructure. DNS and XNTP services are required for normal host to IP name resolutions and time synchronization.

The primary service interface for the Intrusion Detection service is to the Central Firewall Service and the campus backbone. See the Central Firewall Service and Local Area Network/Campus Backbone Network & Wireless Local Area Network documentation for further information. Secure login mechanisms are provided via secure shell. DNS and XNTP services are required for normal host to IP name resolutions and time synchronization. SMTP Mail system for e-mail and text pager alerts to network security team members.

Video and data services utilize the LINK system. The LINK system also provides service interface for the Graphics and Visualization Laboratory described in the Application Services component.

The ESN relies on the following GRC infrastructure services: DNS, NTP, GRC network infrastructure, fiber plant, SSH, AAA, Central Firewall and mail.

4.3.10 Service Abstraction Environment

The inter-building cable wiring is designed to be utilized by any and all uses capable of connecting via copper, coax, or fiber. The uses include a variety of network systems that provides ethernet services, fast-ethernet services, ATM services, T1 services, CATV broadcasting services, multicasting services, Mass Storage services, point-to-point, security circuits, special service circuits, fire circuits, fiber circuits, telephones, and other services that provide voice, video, and data.

The firewall is for the most part transparent to the users. IP traffic destined for external networks is sent via default gateway and default route statements on the backbone routers to the inner router that in turn forwards it to the outer router. Exceptions to this transparency are HTTP traffic, SMTP mail traffic, and DNS traffic.

The DNS Service has been entirely designed to be utilized by any and all clients capable of using DNS as defined by the various IETF standards (RFCs). This service is available to all clients, regardless of the operating system, that support DNS for host and IP address name resolution.

The Wireless Local Area Network provides peer-to-peer communication among independent devices (personal computers, Macs, workstations and other mobile devices, e.g. Palm Pilot located within Glenn Research Center connecting to the campus backbone via RF (radio frequency) devices) and to communicate outside the center through Wide Area Network (WAN) connections.

Facilities Special Circuits: Many of the GRC experimental facilities have their own secure private LAN. These private LANs are not interconnected to the NASA Campus Backbone Network as described above. When these facilities are not running in SECURE MODE, then they are connected to the campus backbone network via fiber optic using a FOIRL (Fiber Optic Inter Repeater Link). These special circuits are not monitored during SECURE MODE but are supported by the GNOC when a problem arises.

4.3.11 Support Processes

The Telecommunications and Networking Branch within the Computer Services Division (CSD) and the ODIN contract provide the support for this service. Some systems have a high level of security and cannot be described in this document.

Standard system, security, and log monitoring.
Troubleshooting.
Backup monitoring.
Configuration control procedures.
Backup of servers to mass storage.
Maintain router configuration files. Particularly the addition and removal of access list statements to allow or deny specific network traffic.
Respond to trouble tickets related to firewall filters or network connectivity.
Maintain a configuration database for network servers.
Monitor disk space on servers and remove unnecessary or dated files.
Monitoring security newsgroups, mailing lists, and web sites for new exploits to DNS and proactively addressing any issues that do arise.
Monitor CERT, CIAC, AUSCERT, NASIRC, BUGTRAQ, and vendor alerts on new exploits then add new signatures if applicable to Intrusion Detection sensors.

4.3.12 Facilities

GRC provides the facilities (computer rooms, training, security) that are used to support the GRC Institutional Network. The bulk of the GRC provided computer room space and associated needs (e.g., power, security, etc.) are provided in building 142. The building is equipped with redundant power and is configured to support computer systems. The rest of the network is supported in a series of wiring closets in each building to support the distributed nature of a LAN.

4.3.13 Technology Flashpoints

The current DNS system does not lend itself towards emerging technologies such as Policy-based networking, IPv6, Dynamic domain naming systems, LDAP integration, or DHCP integration.

Fine tuning of the Intrusion Detection ISS network sensors and the NID sensor is an on-going process. The sensors detect numerous false positives which need to be adjusted as well as the lack of detection of attacks that is needed.

Wireless LAN security standards need to be defined and adopted.

4.3.14 Compliance

All new equipment at GRC is in compliance with NPG 2810.1, Security of Information Technology, specifically the guidelines for Firewalls, requirements for a Trusted Host, and the Perimeter Firewall Rule Set (established by Trust Model Group subgroup from IT Security Managers Group).

The LAN service also complies with external standards such as

IEEE – Institute of Electrical and Electronics Engineers (IEEE 802.11 Wireless LANs)
Americans with Disabilities Act Section 508 accessibility requirements.

4.3.15 Capabilities

The GRC LAN component provides a variety of connectivity services directly or through provision of access to other components of the Office Automation, IT Infrastructure, and Telecommunications Infrastructure. These include:
Serving as the single point of entry for all GRC incoming and outgoing network traffic.
Allow only required and specific protocols through the firewall. Deny all other traffic.
The components must perform at a level consistent with the bandwidth of the network.
Provide detailed logging and monitoring facilities for near real-time detection of intrusions.
Implement application-layer proxies where possible to reduce the vulnerability of the campus Intranet and internal hosts.
Limit the exposure of the Internal network, the External Services Network and information obtainable by external resources.
A UNIX UserID access script which accepts remote shell calls from root accounts on any UNIX system, checks the query syntax, logs all access requests, and locks/unlocks/modifies database.

4.3.16 To Be Condition

Continued evaluation of security and network monitoring tools

Continued development of the IDAT tool which will include real-time analysis and reporting, encryption, and fine-tuning.
Evaluation and employment of honeypots.
The Security Management group is planning to operate in a secure mode in their own LAN.
All the major aeronautic test facilities should have their own campus backbone separate from the GRC campus backbone.
Implement more VPN (Virtual Private Network), VLAN (Virtual Local Area Network), and other software special circuits as demands increase across the Center.

4.3.17 Voice Component

4.3.17.1 Central Telephone System

In 1990, the Fujitsu F9600XL Telephone System was installed in NASA Glenn Research Center (GRC), building 15 (Edward R. Sharp Employee Center), to replace the aging GTE GTD4600 Telephone System. The F9600 is currently configured with 3,739 analog and 1,242 digital telephone station ports. There are five Integrated Services Digital Network (ISDN) Primary Rate Interfaces (PRI) for Direct Out Dialing (DOD) and Direct In Dialing (DID) calls. One additional PRI interface with the F9600ES Telephone System is located at Plum Brook Station, in Sandusky, Ohio. Three T-1's for Federal Telecommunication System (FTS) trunks for long distance dialing, one T-1 goes directly to the ACTS Teleos PBX, two T-1's provide access to the Centrex system at the off-site facility Aerospace Technology Park (ATP). Two T-1's interface to the Meeting Place Teleconference System and two four-wire E & M trunks are connected to the OAI PBX located outside the Glenn West Gate.

4.3.17.2 Systems Description and Operational Concept

The F9600XL is a multimedia platform PBX supporting such advanced technologies as Integrated Services Digital Networking (ISDN) public and private, Primary Rate Interface (PRI), station-side Basic Rate Interface (BRI), and Computer Telephony Integration (CTI). Non-Facility Associated Signaling (NFAS) is also supported to allow networked F9600's with multiple ISDN PRI facilities to share one-D channel. This allows the F9600 to support switched 1.544 MBPS channel capabilities in high-speed data network applications. Fully expanded, it will support up to 9,600 station lines and 300 network trunks. It is fully redundant down to the line card-level providing superior reliability.

4.3.17.3 Systems and Support

Hardware

The F9600XL has three types of cabinet configurations. They are: the Control cabinet, the Network cabinet, and the Line/trunk cabinet. Presently, Glenn has one Control cabinet, three Network cabinets, and three Line/Trunk cabinets.

4.3.17.4 Intercom Systems "10A2's"

This document is intended to cover the public address systems in use at the Glenn Research Center (GRC). It is not intended to be a complete guide to the public address systems, but rather an outline of their major features sufficient to demonstrate the role and implementation of the systems in the Glenn distributed environment.

4.3.17.5 Systems Description and Operational Concept

The Public Address Systems at the Glenn Research Center (GRC) are comprised of five ITT 10A2 telephone key systems that provide intercom capability for all wind tunnel and support facilities. The systems are fed by trunk lines that provide a limited number of phone numbers to be shared by many stations/locations in a facility. For example, four numbers may appear on twenty or more units. There are also inter-facility wiring/connections required for some complexes.

Electro-mechanical Key Service Units (KSU) are an integral part of each system and have battery back-up capability. Most of the 10A2 phones are equipped with either 10 or 25 push buttons. All instruments in a specific facility are daisy-chained together with 25-pair wiring. This wiring can make it cumbersome and time-consuming to add and/or relocate instruments. Usually, specific instruments are identified by intercom number/station.

Because of the ruggedness of the 10A2, it has been difficult to find a suitable replacement for this aging technology. Experiments with both wireless and multi-line digital telephone technology are underway in the Building 54 complex to help resolve this upgrade issue.

System locations:

- Building 54 Complex
- Building 86/113 10 x 10 Complex
- Building 145/90 Complex
- Building 87/88/90 Complex
- Building 110

4.3.18 Technology Flashpoints

There are no official drawings available for the 10A2 systems.
Due to the age of the 10A2 systems, locating spare parts is becoming more difficult.

4.3.19 To Be Condition

Continue to experiment with other technologies in order to final a viable replacement for the 10A2 systems.

4.3.20 Operational and Emergency Intercom (O&EI) System

The Operational and Emergency Intercom (O&EI) System was installed at NASA Glenn Research Center in 1987. The system was designed by GTE Business Communication Systems to meet specifications provided by NASA Glenn. The system was to be independent of Glenn's centralized PBX and provide communications between the Central Control Building (143) and various test cells, control rooms, substations and other remote locations throughout the lab. Specifically it was to provide one button dialing to all remote locations, the ability to connect up to eight telephones together by pressing one button and interface with the existing overhead paging systems in various buildings and locations.

4.3.21

4.3.22 Systems Description and Operational Concept

Please note: The following information is intended to provide a general overview of the system configuration and operation. Actual station counts may vary from the information provided due to ongoing add, move, and change activity. The numbering plan presented is generic, and is used only for the purpose of explaining system operation. It does not represent the actual numbering plan utilized by the system.

Overview

The GTE/Fujitsu Small Business Communication System (SBCS) is the central component of the O&EI system. It provides dial tone to the Viax Control Consoles and the telephones at the remote locations. It also links the system to the Tellabs Eight Party Conference Bridge via analog station lines from the F-9600 PBX. The VIAX Key System provides the control capabilities of the system utilizing the four consoles located in the Central Control Room of building 143. The Tellabs Eight Party Conference Bridge provides instant communication of up to eight system users at any one time. The system is also integrated with the buildings overhead paging systems.

Calling Within The System

The SBCS is programmed with approximately 200 analog station lines. The lines are divided into two distinct numbering plans 100 – 199 and 200 – 299. The first series of numbers are terminated on the VIAX system and appear on buttons of the control consoles. The second series of numbers are used to provide dial tone to the telephones at the remote locations. The station buttons on the VIAX consoles are arranged so that each console can access specific remote locations. In other words it is not a squared system, with all numbers appearing on all consoles. The buttons on the consoles are labeled to reflect the extension number of the remote phone locations; however, the actual extension number of the button is different. For example, if button one (1) were extension 100 it would be labeled 200 to correspond to the extension number of the actual telephone. Each console button is programmed to speed dial the extension number it corresponds to. When the button labeled 200 is pressed extension 100, located on the console,

speed dials extension 200 to establish a connection. In the same manner speed dial numbers are programmed on each of the remote telephones allowing them to reach specific consoles.

Conference Access
The conference access feature allows O&EI users to join a conference with up to eight participants. The Telelab Conference Bridge is connected to the labs centralized F-9600 PBX via eight analog station lines. The lines are programmed in the F-9600 as an outgoing analog trunk group and assigned a trunk group access code. Eight additional analog lines in the SBCS are programmed as outgoing trunks assigned to a trunk group and given a trunk group access code. These lines terminate on the F-9600 as incoming analog trunks. When one of the eight numbers associated with the conference feature is accessed from the SBCS a trunk to trunk connection is established through the F-9600 to the conference bridge. Each telephone has a speed call button programmed with the SBCS trunk group access code. This allows users to access the conference circuits by pressing one button. The use of the F-9600 is required because the SBCS cannot provide disconnect supervision for the conference bridge. Since conferencing was not a crucial part of the O&EI system operation, NASA approved integration of the F-9600 at the time the system was being installed.

Paging
Existing overhead paging equipment was integrated with the system and is accessible from the remote telephones or control consoles by dialing one of three access codes or pressing a speed call button programmed with the paging code. Connectivity to the paging equipment is made through the SBCS.

4.3.23 Technology Flashpoints

- The major concern is the age of the equipment and it's older technology. Several of the systems are no longer being manufactured; however, replacement parts and technical support are currently still available. Fear is that within a few years this will not be the case. Concerns about each system are addressed below.

GTE/Fujitsu SBCS

- The product is no longer manufactured but technical support and replacement parts are currently still available. The manufacturer does plans to discontinue all support for this product within the next few years.
- The current software load (Feature Package D) is not Y2K or North American Numbering Plan (NANP) compatible; however, since no outbound dialing is done, and no date dependant features are utilized, the release of the software should pose little or no problem in the future.

V-Band / VIAX Key System

- No longer manufactured but technical support and replacement parts continue to be available at this time.

Tellabs Eight Port Conference Bridge

- Components for this product are still being produced and technical support is available from the manufacturer.

4.3.23.1 Plum Brook Telecommunications System and Copper Cable Plant

In 1997, the Fujitsu F9600ES Telephone System was installed in Plum Brook Station, located in Sandusky, Ohio to replace the aging GTE GTD-OMNI SII PBX. The F9600ES system is currently configured with 138 analog and 61 digital telephone station ports. There are four Direct–in-Dialing trunks (DID) and four Direct-Out-Dialing (DOD) trunks. There is a Primary Rate Interface between Plum Brook Station and the Glenn Research Center (GRC), Cleveland, Ohio. Eight channels are utilized for communication between the sites with the remaining channels being utilized for Federal Telecommunication System (FTS) access. Fujitsu ISDN Private Networking (FIPN) provides feature transparency, centralized voice mail service, and other advanced telecommunication and data networking functions.

4.3.24 Systems Description and Operational Concept

The F9600ES system consists of a basic cabinet and an expansion cabinet. Up to five expansion cabinets maybe used in the maximum system configuration. Each cabinet houses groups of cards, which make up the particular unit. These units are classified as the following:

- Basic Unit (BASU), which houses the Management/Call Processor (MCPR)
- Line/Trunk Unit (LTU)

Note: The present configuration is one Basic Unit and one Line/Trunk Unit.

4.3.25 Systems and Support

<u>Support Procedures</u>
Technical support is provided on a per instance basis with Fujitsu Business Communication Systems (www.fbcs.com) that provides the following:

Technical Assistance Center
Per instance call assistance from the T.A.C. group in Anaheim, California.

4.3.26 Teleconferencing Services

Teleconference Services is intended to provide the Glenn Research Center (GRC) community with a convenient and reliable method of collaborating with internal and external personnel. GRC is comprised of many diverse work groups and accordingly it is critical to provide workable teleconferencing solutions to meet all of their requirements. Therefore, the systems applications and features supporting the service were selected to provide the Glenn community with a wide range of teleconference options.

4.3.27 Systems Description and Operational Concept

GRC provides our users with five methods of teleconferencing. Four are features of the Fujitsu F-9600XL PBX. These are adequate for small conferences of eight participants or less. For larger teleconferences, a state of the art, stand-alone conference system developed by Latitude Communications was installed in late 1996. This system more than satisfies the current requirements for larger conferences of up to 48 participants.

The F-9600 XL PBX provides three-way, meet-me eight-party, attendant-initialized eight-party, and user-initialized eight-party conferencing features. The three-way conferencing feature utilizes mixer trunk cards, each supporting up to four individual three-way conferences. GRC currently has 15 cards installed allowing 60 three-way conferences to occur simultaneously. The meet me, attendant-generated, and user-generated eight-party conferences are supported by conference trunk cards. Each card has sixteen circuits and supports a total of two, eight-party conferences. GRC currently has two cards installed for general Lab use. A third card is installed and dedicated to supporting conference functions for the 8X6 wind tunnel testing facility in buildings 53, 54, and 57.

A stand-alone teleconference server supports conferences from two to 48 people and interfaces with the F-9600XL via two dedicate T-1 spans. The server is UNIX-based and connects to the GRC LAN via an AUI connection. The system provides the ability to attend, schedule, or review conferences by telephone, client server software, or a web browser. It is configured with 48 ports that can be allocated to any number of conferences for a given time period. An optional voice drive is installed with the ability to record 8,893 minutes of meeting audio. A second Windows NT-based server is installed and connected via the GRC LAN that provides E-mail notification, web browser access, and data conference functions by utilizing Latitude proprietary, Data Beam and Microsoft Netmeeting software.

<u>Functionality</u>

- Fujitsu F-9600 XL PBX

- Three-way conferencing: Allows end users to establish a three-way teleconference with two external or internal participants.

- Eight-way user conference: Allows end users to establish a conference with up to seven additional internal or external participants.

- Eight-way attendant conference: Allows attendant to establish a conference by calling up to eight internal or external participants. (one internal participant must be included)

- Eight-way meet me conferencing: Allows end users to establish an eight-party call in conference for up to eight internal participants.

<u>Latitude Meeting Place Conference Server</u>

- End user scheduling: The end users can schedule one time or recurring conferences for up to 22 internal or external participants for a maximum of 480 minutes.

- Administrator scheduling: The system administrator can schedule one time, recurring or continuous conferences for up to 48 participants for any number of minutes.

- Scheduling methods: Conferences may be scheduled by telephone, Meeting Time client software, or by using a web browser application.

- E-mail notification: Automatically notifies users of scheduled conferences and provides instructions on how to attend.

- Meeting recordings: Audio recordings can be made with a maximum of 480 minutes per conference

- Meeting attachments: Such as documents, files, URL's, etc. Can be attached to a conference and distributed via the E-mail notification feature. Documents may also be retrieved using client software or using the WWW access.

- Out dialing: The system has the ability to call or page conference participants at the start of a conference.

- Data conferencing: Provides white board, document sharing and real time editing functions (see future)

Customers

- Environment Penetration: Teleconference services are available to the entire GRC community of over 3,500 employees. Access to the F-9600XL teleconference features are available to all employees with no intervention. The Meeting Place conference server is populated with profiles for approximately 90% of the employees with approximately 10% to 15% activated and configured to schedule meetings, Profiles for those users requesting scheduling capabilities are activated or established and the user is assigned a user ID, user profile and associated passwords.

Utilization

Fujitsu F9600XL PBX conference features: No statistics are available
Meeting Place conference server: 134 conferences / 21,408 min. monthly

Service Interfaces

- Fujitsu F-9600XL PBX Teleconference Features

- The primary interface to these features are analog and digital telephone lines. FTS T-1 facilities and DID and DOD PRI facilities.

- Meeting Place Conference Server

- The Meeting Place server interfaces with the Fujitsu F-9600XL PBX via two dedicated T-1 lines. These provide the audio path for attending, scheduling, or listening to meeting recordings and are accessible via the DID and FTS200 trunking facilities or from internal station lines. They also provide out dialing functions to meeting participants and pagers.

- Connection to the GRC LAN permits users to schedule, attend, or review meetings from their work stations using Latitudes-proprietary client software (Meeting Time 98).

- Web access, E-mail notification, and data conference features are also supported through LAN connectivity to a separate Windows NT server. Remote maintenance functions are also performed via LAN connectivity using Telenet terminal emulation.

Service Abstraction Environment

To ensure the resources of the Meeting Place server are used effectively, restrictions are assigned in each users profile. These restrictions control meeting length, port assignments, and other scheduling parameters critical to the efficient operation of the system. Teleconferences that fall outside of the normal parameters are established by the system administrator. These include, but are not limited to, continuous two- and three-day meetings and teleconferences that network to off-site conference facilitates to provide GRC employees with local access.

Support Processes

- Statistics, total meetings, meeting minutes, recording time, scheduling failures
- Create user profiles
- Schedule meetings
- Troubleshooting, involving T-1 interface
- Troubleshooting, involving network connections
- Password resets
- System data base backups

Security

- F-9600XL PBX conference features

  Provides no end user scheduling ability from off the Lab and poses no security risk.

- Meeting Place

  Latitude Communications: http://www.latitude.com/

  Client software and WWW access requires a user id and password to schedule meetings.

  Telephone access requires a profile number and password to schedule meetings.

  Outside conference attendees are required to enter a meeting id to access a conference.

  Remote modem access by service personnel is restricted to as required.

  Forced yearly password changes for user profiles and user id's.

  Conferences can be password-protected or screened-entry implemented to ensure against unauthorized access.

4.3.28 Trunked Radio System

The Glenn Research Center (GRC) Trunked Radio System is the primary radio communications system at the Center. The Trunked Radio System was implemented to manage all radio traffic on the Center. In the past, several organizations operated independent radio communication equipment which proved to be an inefficient means of managing spectrum, radio traffic, quality of service, and maintenance. The Trunked Radio System replaced all of the independent radio communication equipment and serves as the only authorized and licensed two-way radio communication system at the Center.
The Trunked Radio System shares five repeaters with all of the users at the Center. The site manager coordinates all radio traffic. Trunked radio methodology allows for efficient use of spectrum. Programmable Talk Groups filter independent organizations from interfering with other organizations. The repeater site located in building 64 provides strong signal transmission and reception because of the geographically-centralized location.

4.3.29 Systems Description and Operational Concept

The Trunked Radio System provides radio service to the Center with following goals and philosophies:

- Provide individual work group filtering.
- Provide radio-to-radio call capability.
- Provide interconnect capability to the Glenn Phone System.
- Provide total radio signal coverage within GRC
- Provide maintenance to all radio users.
- Provide DES encryption to security users.
- Provide radio programming services to all users.
- Provide procurement consultation to all users.
- Ensure proper NTIA (National Telecommunications and Information Administration) compliance through coordination with the GRC Frequency Manager.

The Glenn Trunked Radio System is comprised of nine subsystems. A general description of each of the subsystems is provided below:

- Repeater System: Five 100-watt repeaters configured for operation within the specified government frequency range for trunked radio system operations (400MHz – 420MHz)
- Site Controller: A central-based computer system is collocated with the repeater system. This computer system provides all radio call traffic management and enables the system to providing trunking capabilities.
- Failsafe Trunking: An individual computer system is assigned to each of the five repeaters to provide failsafe trunking in the event of a site controller failure. Failsafe trunking enables the system to continue operating in a limited trunked mode.

- Site Manager: A remotely-located computer system that provides operator control of the system, maintains and downloads configuration parameters. All radio call traffic data is also logged on the system for traffic analysis and call management detail records.
- Power Monitor Alarm: An enhancement to the system to detecting and reporting repeater problems.
- Antenna System: A combination of a combiner to tie the five repeaters together into a signal antenna. The antenna system is located directly above the repeater system on the roof of building 64. Lightning protection devices located on the roof of building 64 provide repeater site protection.
- Telephone Interconnect: Users of the trunked radio system have the capability of sending or receiving telephone calls through the radio system by means of the telephone interconnect subsystem.
- AC Power System: The repeater site has a UPS system directly in-line with the primary AC source. In the event that the substation that provides power to system fails, the system will automatically switch over to a secondary power source supplied from a different substation.
- User Radios: There are three basic radios used at GRC. Mobile radios are mounted inside vehicles and provide up to 100 watts of output power. Base stations are set on consoles, tables, or desks and can provide up to 100 watts of output power. Handheld radios are used in the field and can provide up to five watts of output power.

Functionality

- Repeater: Five repeaters are used to receive incoming radio calls and route them through the site controller which then directs them to a repeater for broadcast. Yearly maintenance is provided on each of the five repeaters to ensure proper operation. All maintenance on the system must be made by personnel certified to work on Ericsson/GE equipment. Reports are delivered to NASA for filing.
- Site Controller: This DIGITAL (DEC)-based computer controls all aspects of operation of the repeater site. Access to this computer can be made by a local terminal or remotely from the Site Manager.
- Site Manager: A DIGITAL (DEC)-based desktop computer system used to configure the repeater site, maintain logs, and control repeater site operation remotely. The Site Manager computer sets up all individual user accounts on the radio system. It also sets up the talk groups which provide radio privacy within a community of users. After user requirements are defined, the radio administrator programs the individual talk groups through this computer. The configuration is then downloaded to the site controller. There are 87 talk groups programmed into the system at this time.
- User Radios: Individual radios must be programmed by the radio administrator. After investigating the required the administrator determines whether new talk groups are to be issued and which existing talk groups are enable on each individual radio. The radio is delivered to the administrator and is programmed through a laptop computer. Mobile radios must be programmed in the field because of the hardware being mounted in a vehicle. Base stations can be programmed in the field or at the administrator's work area.
- UPS System: Routine maintenance is provided by the 7525-Institutional Operations and Management Branch at GRC. The radio administrator checks to make sure that routine maintenance is being carried out by this organization.

Customers

- Because the Trunked Radio System services the entire Center, all civil servants and support service contractors are customers.

Service Interfaces
- The Trunked Radio System uses a single phone line to interface with the GRC Telephone System.
- The Trunked Radio System uses the copper cable plant to remotely-control the transmitter site located in building 64.
- GRC Security maintains and operates all DES encryption hardware and configurations.

Support Processes
- Provide full maintenance coverage.
- Provide battery exchange for batteries that have failed.
- Program radios when required.
- Provide traffic statistics yearly to the GRC frequency manager to comply with NTIA regulations.
- Provide customer support for select, appropriate hardware.
- Provide customer support for recommended installation solutions.
- Maintain repair and maintenance logs.
- Monitor system daily to ensure proper operation.

Security
- The remote site manager console must be kept in a restricted area and only authorized personnel should be granted access to the area. The site controller is to be password-protected. Only authorized personnel should be granted access.
- GRC Security maintains and operates all DES encryption hardware and configurations.

4.3.30 Technology Flashpoints

- All Federal government agencies must move to narrow band frequency use. GRC must comply by 12/31/06. The Plum Brook station must comply by 12/31/04.

4.3.31 Voice Messaging System

In 1998 the Octel XC1000 Voice Messaging System was upgraded to Octel Overture 350. Octel is currently configured with approximately 5,000 voice mailboxes.

4.3.32 Systems Description and Operational Concept

The Octel Overture 350 is a high-performance, data-ready, voice information system that provides: telephone answering, voice messaging, and call processing. Using Octel's "Aria" software, the system can provide voice information processing features to as many as 30,000 subscribers or as few as 100.

The system uses a multiple-processor, distributed architecture. This means that all major subsystem and most logic cards have their own microprocessor.

The system can support up to 1,530 message hours. A single cabinet configuration provides up to 72 ports; dual cabinet configuration provides up to 144 ports. The system has three modes of operation: telephone answering, voice messaging, and call processing.

At the Glenn Research Center (GRC), Octel is integrated with the PBX system. The caller is forwarded directly to the user's mailbox, if the user's extension is busy or if it rings with no answer, where the caller hears the user's personal greeting. After the caller leaves a message, the system instructs the PBX to turn on the appropriate message-waiting indicator to alert the user that a new message is waiting.

Octel includes standard and optional features that: expand call coverage, enhance system administration capabilities, provide multiple and variable addressing schemes, and provides better application support tools.

4.3.33 Systems and Support

Support is provided by trained, certified technicians on the Octel Overture 350 who maintain the Voice Messaging System and also perform the daily move, adds, and changes.

4.3.34 Video Component

4.3.34.1 GTV Control Center – Video Broadcasting

The GTV Video Control Center serves as the focal point for video distribution at Glenn. Video is distributed throughout Glenn by means of a bi-directional CATV system that broadcasts and receives broadband video. The LINK (Lewis Information Network) is the CATV component of the system that uses RF modulators to broadcast cable TV to: the Glenn buildings, the Ohio Aerospace Institute, and the Aerospace Technology Park.

The Control Center also serves as the hub for distributing video via fiber optic cable. Fiber optic transceivers are used to support a wide variety of point-to-point video applications.

Operations within the LINK Video Control Center include: playback of pre-recorded programming, transmission of live programming produced at Glenn, transmission of satellite programming, updating of video bulletin board operations, program recording, and support of special internal and external video distribution projects.

4.3.35 Systems Description and Operational Concept

The GTV Video Control Center provides video services to the Center with the following goals and philosophies:

- Provide Video Bulletin Board Services
- Broadcast requested satellite programming
- Broadcast requested prerecorded material
- Broadcast live programming generated by the ITC (Imaging Technology Center), a non-ODIN organization.
- Coordinate and implement point-to-point fiber optic video circuits to support research, education, and public affairs.
- Maintain SMPTE (Society of Motion Picture and Television Engineers) standards.
- The LINK Video Control Center does not create video programming with the exception of Video Bulletin Board announcements. The Control Center distributes and broadcasts video programming.

The GTV Control Center is comprised of nine subsystems:

- RF Modulators
- Audio/Video Matrix Router
- Editing System
- Video Monitoring
- Audio Monitoring
- Audio/Video Recording and Playback
- Character Generator
- Fiber Optic Audio/Video Interface
- Frame Synchronization
- Satellite Downlink System
- Reference Signal Generation

<u>Functionality</u>

- Routing Switcher: 64 video inputs and 64 video outputs. 128 audio inputs and 128 audio outputs. Matrix routing capability. SLIP connection to a PC to configure system and maintain configuration database. Current configuration setup for full analog operation. Digital/Analog mixed configuration capable. Audio/video switching made through two control panels co-located with the switching equipment.
- Audio DA's (Distribution Amplifiers): 16 independent distribution amplifiers configured to monitor the left and right audio channel levels of GTV channels 7-13.
- Video DA's: Used to provide a duplicate feed of video for a signal source. Also used to control video levels of signals.

- Fiber Optic Transceivers: 17 receivers and 17 transmitters used to transmit two-channel audio and video to and from remote locations.
- Two Computers: Provide video for bulletin boards and special graphics required for unique broadcasts.
- VTR's (Video Tape Recorders): Used for recording and playback of program material.
- Editor/Switcher: Provides editor-control functionality to VTR's for editing videotape and serves as a production switcher for live programming events.
- Waveform/Vectorscope: Provide visual waveforms for audio and video quality analysis.
- Test Generator: Provide black-burst sync and test signals to system.
- Audio Mixer: Provides a means of controlling audio levels and equalization for editing and live programming events.
- Audio Monitor: Provides basic audio level and monitoring for programming events.
- HiZ to 600 ohm Line Amps: Provides an interface between unbalanced audio systems and balanced audio systems.
- Dual Audio Cassette Deck: Used to make recordings and duplicate tapes
- TV Tuner: Used to receive GTV Channels and local area broadcast channels.
- CD Player: Used to play programming on GTV Channels.
- FM Tuner: Used to receive required programming for recording or broadcasting on GTV.
- Video Disk Player: Provide playback of LaserDisk material submitted for broadcast.
- Power Amplifier: Provides amplification for primary speakers.
- Provides sound-monitoring capability.
- Frame Synchronizers: Provide TBC and frame synchronization for unstable signals. Also provide frozen frames of video for GTV Channel 13 ID.
- Dub-Center: A group of five VTR's used primarily for duplicating tape.

Customers

- Because the GTV Control Center broadcasts to the entire Center over the CATV System all civil servants and support service contractors are customers.

Service Interfaces

- The GTV Control Center uses RF modulators to broadcast on the LINK System (CATV). The LINK System serves as the vehicle to deliver GTV programming to the users.

- The GTV Control Center uses the copper-cable plant to remotely-control the satellite antenna located in building 139. A pair of dedicated 9600bps modems are connected between a computer in the GTV Control Center to the PESA routing switcher and Monterray Satellite receiver located in building 139.

- The GTV Control Center uses the fiber optic cable-plant to transmit audio and video between various locations at the Center. The documentation provided displays all of the fiber optic links supported at this time.

- Coordinate the repair of all equipment with the Calibration Lab.

Service Abstraction Environment

- The GTV Control Center broadcasts a standard NTSC 170a signal using a standard off-air channel modulation configuration to provide services to broadcast receivers connected to the LINK. Users with any standard television set can receive broadband programming from the GTV Control Center.

- Special baseband signals are provided to users through the use of fiber optic transmitters and receivers. Several permanent fiber circuits have been established to support video distribution needs. Temporary circuits are coordinated with the GNOC (Glenn Network Operations Center) to access the fiber optic cable resources at the Center. Users are provided with a baseband feed consisting of a 75-ohm BNC video connection and a 600-ohm terminal block for two channels of audio.

Support Processes

- Monitor all channels to ensure correct programming.
- Update and maintain the VBB (Video Bulletin Board).
- Backup VBB.
- Schedule and review all broadcast requests.
- Broadcast programming at appointed times.
- Maintain quality control for audio and video.
- Test all equipment weekly.
- Coordinate Center Director Messages with Director's staff, ITC (Imaging Technology Center), and ViTS Coordinator.
- Coordinate all special fiber optic circuit installations.
- Maintain stock supplies of videotape.
- Coordinate all equipment repair and maintenance.
- Record programming as required.
- Maintain database of all work requests.

Security

The GTV Control Center is a restricted area and only authorized personnel should be granted access to the area. Access made be made by use of a card key only.

4.3.36 Technology Flashpoints

HDTV (High Definition Television) also known as ATV (Advanced Television) will eventually replace the current television format that is supported at this time. At that time, major engineering changes will be required to support the ATV format and the legacy NTSC RS170a format. Schedules and funding have not yet been determined.

4.4 Electronic Work Environment Component

4.4.1 Messaging and Collaboration Component

Messaging (Central Email & Directory) Services

As part of the ODIN support for NASA Glenn, centralized Email and Directory services are provided. This service currently includes centralized SMTP, POP, X.500, Virus Filtering services. PKI (Public Key Infrastructure) services are integrated with Center email services. A centralized mailing list service (Majordomo) is also provided. SPAM filtering services will be implemented in the near-term. This centralized email infrastructure integrates with the standard ODIN interoperable desktop systems and the Windows Terminal Server environment to provide basic electronic interoperability functionality to all GRC staff. The vast majority of GRC employees use Eudora as their email client.

Team Collaboration Tools

The eNASA Planning activities in 2001 recommended a OneNASA Team Collaboration Strategy and encouraged an agency pilot effort. NASA Glenn, in it's role as Principal Center for Workgroup Hardware & Software developed a Workgroup Collaboration Standards document (NASA-STD-2819 – Collaborative Tools Standards). In 2002, the NASA CIO provided funding to support the Team Collaboration Pilot. This pilot focuses on products to support virtual team meetings and spaces. The key objective of the pilot is to assess the value of tools as applied to NASA team. The core business drivers include: enable work to get done with less reliance on travel; enable collaboration across NASA centers and external partners.

4.4.2 As is Condition

Center email services are consistent with the following agency standards:

- NASA-STD-2810 – UNIX Interoperability Standards
- NASA-STD-2804 – Minimum Interoperability Software Suite
- NASA-STD-2807C – The NASA Directory Service
- NASA-STD-2808A – Interoperability Profile for NASA E-mail Clients
- NASA-STD-2815 – NASA Electronic Messaging Architecture, Standards and Products
- NASA-STD-2820 – Encryption and Digital Signature Standards

Within the past year, NASA Glenn has worked collaboratively with the NASA Postmasters Working Group per directive from the NASA CIO to implement a new email addressing scheme for NASA Civil Service staff. In the future this will be extended to Contractor staff. In addition, NASA Glenn is an active participant in the agency pilot project to identify a new agency-wide E-messaging standard that likely will be implemented via a vendor-hosted application service provider model. This new service will provide basic email services and expand current collaborative tools options for NASA staff. This new solution will help implement improved security practices, interoperability, and remote access functionality. Moving to an architecture that supports the IMAP protocol is expected to provide an environment more conducive to support of future electronic records retention requirements.

The Collaboration Pilot has been in operation approximately one year. There are 56 pilot teams (~700 people) supported, spanning all NASA enterprises/centers and some external partners.

These pilot efforts are provided via an external Application Service Provider and offer the following functionalities:

Pilot for Virtual Team Meetings Software Product, WebEx Meeting Center

- Data conferencing: presentations, application sharing, desktop sharing
- Real time polling, meeting recording, integration with voice conferencing
- Simple scheduling and attendance via Web browsers, WebEx plug-in, and email

Pilot for Virtual Team Space Software Product, eRoom

- Shared space for working files and discussions
- Process support: action item lists, routing buttons, team calendar, voting, polling
- Simple access via Web browser; optional plug-in for Windows convenience features (drag and drop)

Since the Collaboration Pilot is provided via Application Service Providers, there are no systems descriptions, no hardware or software configurations and no facilities or operational aspects to describe.

4.4.3 Systems Description and Operational Concept

SMTP electronic mail arriving at the POP Service is expected to be properly addressed to a valid user id on the POP server. This is accomplished either through initial proper addressing, or by the routing of electronic mail through the GRC X.500 Directory Service, to apply domain-level routing information. (For more information on the Directory Service, refer to the Directory Service environment description document.) A majority, upwards of 85%, of the domain deliverable end user addresses resolve to the POP server. Mail is received at the POP server, and sent from the server, using the sendmail SMTP Mail Transfer Agent.

To deliver electronic mail to end user clients, the GRC POP Service utilizes a Public Domain POP3 software implementation, running on Sun Microsystems Inc. hardware. The use of the APOP protocol (an MD5 hash which obscures the user password when mail is retrieved) is strongly encouraged for all users with capable clients, but is not a requirement.

In addition to the POP3 software, due to the large Eudora client community, the Public Domain "poppassd" daemon software is available on the host, enabling Eudora users to reset their passwords within the Eudora client. Non-Eudora users are required to contact an administrator, to effect a password reset or change.

Entry into the SMTP delivery service occurs via TCP/IP connect to either the external (for offsite transfers) or the internal (for internal transfers and deliveries) sendmail daemon. All e-mail is immediately queued (following the philosophy of sendmail that it is better to deliver twice, than not at all), and then processed according to the rules found in the sendmail.cf file. This file contains several local customizations, including a shunt of e-mail with recipient addresses which are not resolvable via the local /etc/aliases file to the Glenn Directory Server (x500.grc.nasa.gov).

The SMTP gateway includes sufficient mail spool space to queue all incoming mail for several days, or sufficient spool space is added via external disk as needed. Occasionally, remote NASA sites will become unavailable for extended periods. Mail is queued off-line and re-queued and delivered once the remote site is restored.

The main SMTP gateway is abstracted via DNS, using aliases such as: smtp, mail, GRCmail, grcmail. All e-mail directed to GRC domain addresses are potentially resolved at this host, including the postmaster@grc.nasa.gov address, along with other critical service-related domain aliases (hostmaster@grc.nasa.gov, abuse@grc.nasa.gov, etc.)

In order to address issues with relays, Unsolicited Commercial E-mail (UCE), and SPAM, the main SMTP gateway is configured to filter relay mail for non-government domains, and also to apply rules to allow the filtering of specific SPAM-generating sites by interaction with the GRC firewall hosts. To completely address these issues, the networking environment must be configured to present the remote TCP/IP connect to the external sendmail daemon, such that envelope addresses are available to the filtering rulesets.

Security issues regarding remote exploits of SMTP daemons within the domain are addressed by network configuration which restricts all SMTP connects entering the GRC domain to the external sendmail daemon of the main SMTP gateway. This allows the immediate application of any required sendmail patches to a single SMTP instance, preventing potential exploits of SMTP daemons within the domain. Significant savings in support costs have been realized as a result of this design, while continuing to properly address emerging security issues.

The GRC SMTP gateway currently functions as a majordomo mailing list server, as well. A large percentage of the members of these lists are offsite users. While it has long been the intention to separate the list serving function onto a dedicated server, for historical and resource reasons, this has yet to be accomplished.

SMTP Service Abstraction Requirements
The SMTP gateway and delivery service has been designed to be highly reliable and available for the transport of SMTP e-mail into, out of, and within the NASA GRC domain. All systems adhering to the SMTP protocols defined in the applicable RFCs and IETF standards, with legitimate reasons for sending e-mail through the GRC domain, are capable of using this system.

SMTP and mailing list functions of this service are abstracted through their respective DNS service aliases.

<u>SMTP Functionality</u>

- SMTP mail daemon: sendmail 8.7.4 daemon accepts and spools SMTP mail on POP server
- POP3 software: Qualcomm qpopper 2.53 popper daemon delivers electronic mail on POP3 port (110/tcp)
- Poppassd daemon: Public Domain implementation of Eudora password change mechanism listening on port 106, effecting changes to APOP password and Solaris /etc/shadow encrypted password data.
- Kerberos services: MIT Athena Kerberos version 5 authentication and remote encrypted login services are present, to support secure remote administration.

- Solaris services: Required Solaris Operating System (OS) services (rstatd, NFS, etc.) are enabled on this host. An effort has been made to remove non-essential OS services, both to remove unnecessary security issues and conserve available resources.
- GRC environment services: Access to required GRC services (DNS, NFS, XNTP, etc.) are enabled on this host.

- Utilization: Peak usage times are during the 0900-1600 hours of normal workdays, with average usage concentrated around 0930 and 1300. During high usage periods, 4-10 POP3 connections to the server per second are not uncommon. Due to automated retrievals, approximately 2-4 connections per second are expected, even during evening and weekend periods.

- Data Transfer: Approximately 2 Gigabytes of e-mail data is received and distributed by the POP service during a normal workday.

- Client Characterization: The vast majority (~94%) of the POP application software used to retrieve mail from the POP server is Eudora, in various versions. The remaining application software used is highly variable, and largely results in the accounts which are unable to use the APOP authentication protocol, since applications such as Netscape Mail (and others) support only POP3 style authentication.

<u>SMTP Service Interfaces</u>
- GRC SMTP gateway: Source of all SMTP mail from outside the domain. Performs some resolution functions for recipient addressing. Queues incoming mail (from offsite) in the event of SMTP daemon failure on the POP server.

- X.500 Directory Server: Resolves majority of SMTP recipient addresses for incoming SMTP mail to the POP Service.

- GRC environment interfaces: The POP Service requires the availability of standard GRC Network Services, including DNS and XNTP, for normal functions. The availability of the GRC kerberos servers is required for remote administration.

<u>POP Service Abstraction Environment</u>
The POP server host is addressed in the DNS as the abstract service name "popserve.lerc.nasa.gov", and accessed via this DNS entry by all clients when checking mail.

The DNS also holds an alias for a host known as "popmail.lerc.nasa.gov". Eudora clients are configured, by default, to deliver their outgoing SMTP mail to the SMTP server resolved by this alias. Currently, "popmail" resolves to the same IP as "popserve.lerc.nasa.gov". This is not a fixed situation, and may be altered (transparently) as needed.

The POP Service has been entirely designed to be utilized by any and all clients capable of connecting via the POP3 protocol. Therefore, the user community includes a variety of POP3 capable clients (Netscape, Microsoft Outlook, etc.), and all decisions regarding this service intentionally make no assumptions regarding the client application used to retrieve electronic mail. The presence of the poppassd Eudora password changing software, and the use of APOP

capabilities of the POP3 software, are seen as feature enhancements, rather than restrictions on the clients which may be used. This design philosophy has been used throughout the service implementation, and is largely credited for the significant penetration into the user community, given that alternative SMTP delivery mechanisms are either available or easily implemented by most user communities.

POP Required Functions:

- Sendmail 8.9.x daemons
- Internal SMTP mail daemon: accepts SMTP mail on port 25 of the gateway, queues the e-mail, and performs all internal deliveries
- External SMTP mail daemon: accepts SMTP mail on a non-registered high port number
- Majordomo 1.9.4 software: perl-based Freeware mailing list software, plus associated list information and membership data
- Edaliases script: a locally-written script used to restrict editing of the /etc/aliases file to a single admin at a time
- Local functions: Various summary logs of weekly traffic are retained and processed as needed for resource planning.
- Data Exposure: Certain data from the /etc/aliases and majordomo list service are exposed to other environments, to enable support functions and consistent alias data with the X.500 Directory Service, via cron and other locally developed scripts.
- Kerberos services: MIT Athena Kerberos version 5 authentication and remote encrypted login services are present, to support secure remote administration.
- Solaris services: Required Solaris Operating System (OS) services (rstatd, NFS, etc.) are enabled on this host. An effort has been made to remove non-essential OS services, both to remove unnecessary security issues and conserve available resources.
- GRC environment services: Access to required GRC services (DNS, NFS, XNTP, etc.) are enabled on this host.
- DNS service abstraction aliases as noted above.
- Periodic backups are performed via the "ubackup"-script, as well as locally, to the internal second system disk.

<u>POP Customers</u>

Environment Penetration: All e-mail passing into the GRC domain is received by the SMTP gateway. All internal deliveries to a domain-level address (SOMETHING@grc.nas.gov) are handled by the SMTP gateway.

- Utilization: Peak usage times or the SMTP gateway are during the 0800-1800 hours of normal workdays. During high usage periods, 3-7 e-mail deliveries or receipts to the SMTP gateway per second are not uncommon. 1-2 transactions per second are considered normal during low usage periods.
- Data Transfer: Approximately 1.5 Gigabytes of e-mail data, comprising approximately 60,000 messages, is received and distributed by the SMTP service during a normal workday.

<u>POP Service Interfaces</u>

- X.500 Directory Server: Resolves majority of SMTP end user final delivery recipient addresses for incoming e-mail, through SMTP transfer of the message.

- GRC POP Server: 85% of the domain-deliverable user addresses resolve (through X.500 data) to the POP server. While the POP server has no special status beyond another SMTP host to the SMTP gateway, any long term failure of the POP server, or the X.500 gateway, will require queuing of e-mail on the main SMTP gateway, or other suitable response.
- GRC environment interfaces: The SMTP service requires the availability of standard GRC Network Services, including DNS and XNTP, for normal functions. The availability of the GRC kerberos servers is required for remote administration.

GRC Firewall hosts: Configuration files in lercmail:/etc/mail/gfwdata provided via a TCP service running on port 45000, access controlled via tcpd wrappers, is intermittently retrieved by the GRC firewall, for use as configuration data for the firewall SMAP service. This enables anti-relay and anti-spam features, as well as other service enhancements. Personnel seeking details regarding these issues should contact the service architect.

4.4.4 Systems and Support

These are the GRC infrastructure servers and their functions:

SMTP gateway/Majordomo List server: central SMTP hub, local alias resolution, direct machine routing, list server, mail reprocessing/reformatting, etc
-Sun Microsystems, SunOS 5.7 sun4u sparc SUNW,Ultra-2
-users supported: entire GRC community (approx 5200), plus some number (estimated several hundred) offsite users in list server functions

ACS-viruswall: virus filter for all incoming mail
-Sun Microsystems, SunOS 5.8 sun4u sparc SUNW,Ultra-2
-users supported: entire GRC community (approx 5200)

GRC POP server: POP3 mail server
-Sun Microsystems, SunOS 5.6 sun4u sparc SUNW,Ultra-2
-users supported: 4068

X.500 MailHub: applies X.500 mail routing information, PKI certificate server, finger/PH directory services
-Sun Microsystems, SunOS 5.7 sun4u sparc SUNW,Ultra-5_10
-users supported: entire GRC community (approx 5200)

E-mail server software is:
-SMTP gateway/Majordomo List server: Sendmail 8.12.x/Majordomo 1.94.5
-ACS-viruswall: TrendMicro InterScan Viruswall 3.6
-GRC POP server: Qualcomm QPopper 2.5x
-X.500 MailHub: Syntegra MailHub 2000

Support levels include:
- Standard system, security, and log monitoring
- Troubleshooting, involving SMTP/sendmail debugging

- /etc/aliases data management
- Troubleshooting, involving local scripts exposing various alias data to other systems
- Backup monitoring

Special Security Issues
Due to the critical nature of this service, and it's visibility, monitoring and addressing of emerging security issues with this service and sendmail, is especially important.
This system transfers large quantities of data, some presumed to be of a confidential nature, via a store-and-forward protocol. The personnel with privileges on this system must be cognizant of this fact, and perform their duties accordingly.

4.4.5 Facilities

The service primarily utilizes servers and communications equipment located in the Data Center in room 160 of building 142 as well as the Center LAN.

4.4.6 Technology Flashpoints

There is currently no mechanism available for non-Eudora users to change their passwords, other than contacting an email administrator. This affects approximately 6% of the user community.

4.4.7 Public Web Component

Publicly accessible web sites at Glenn are currently hosted on a combination of central and distributed servers. The bulk of distributed servers are to provide mission-specific data or information. The bulk of Office Automation, IT Infrastructure, and Telecommunications information for the general public is hosted on the central servers. For example, general mission news and center information is provided from the central site while public mission information such as detailed microgravity measurements of the Space Shuttle or the International Space Station are hosted on distributed servers.

The GRC Public websites are primarily hosted on the Central Web Server for the Center. As of February 2003, approximately 76% of the public sites were hosted on the Central Web Server; 24% were hosted on separate web servers administered by the Content-Owner Organizations. The Central Web Server currently hosts a mix of public, NASA-only, or otherwise restricted sites.

4.4.8 As is Condition

Glenn is currently in the middle of a migration process from a largely distributed web space outside the firewall to a compartmentalized web space with servers and services both inside and outside the firewall. The service is part of an integrated web architecture that runs/will run on 3 servers captured in the Data Center component. One server is used for internal web services, one

server as a dedicated development environment, and one server on the Glenn External Services Network outside the Glenn Firewall. The server outside the firewall currently services both public and NASA-domain only traffic.

4.4.9 Systems Description and Operational Concept

The Glenn Central Web Services provision both the public web and many components of the internal web. There are separate development and production environments. There is an established automated publish process that moves content from a staging environment on the development system to either the internal or public server as appropriate. The development environment is currently provided with some tools such as WebLint (an HTML validator) and WebAlizer (log analysis).

Public Web Sites MUST be registered and approved prior to deployment. This includes security considerations as well as accessibility and other considerations.

4.4.10 Production Network Diagram

Network diagram. This diagram actually depicts both the general configuration as well as the push process for publishing updated content.

Figure 13, Network Diagram

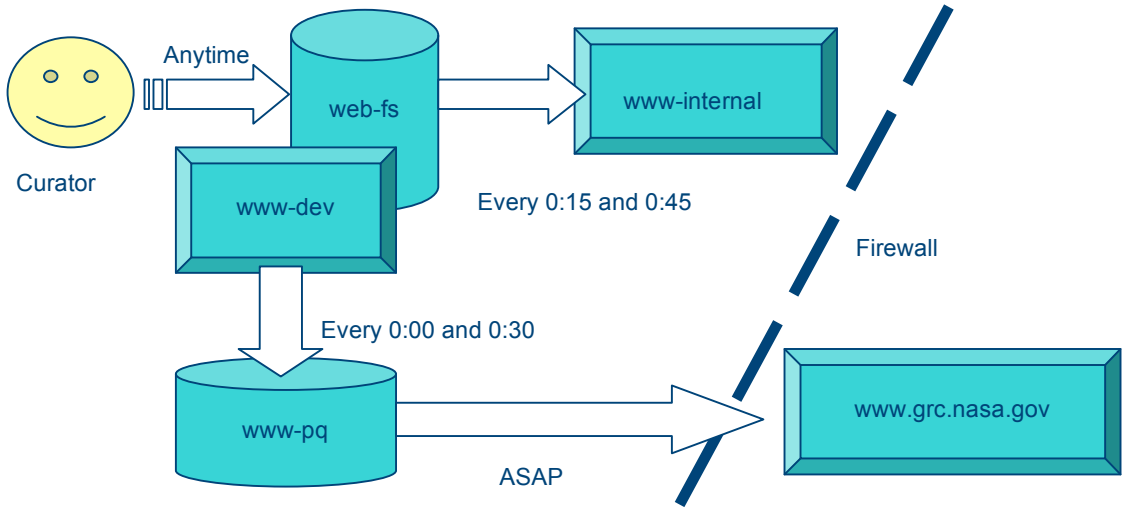

4.4.11 Facilities

The service runs/will run on three servers captured in the Data Center component in room 160 of building 142.

4.4.12 Compliance

Compliance with security and accessibility requirements are monitored for all public web sites.

4.4.13 To Be Condition

Upgrades likely will focus on architecture to host public content separately. Some public content will ultimately be incorporated into the NASA Portal. However, currently there is little emphasis to host much of the web content associated with NASA's research center work. GRC intends to utilize the NASA Web Registration Applications to better inventory NASA GRC's web site content information. This application will provide a centralized means for the agency to inventory NASA's webspace and to track compliance with varied policies/guidelines including Section 508, Privacy Act, COPPA, etc. This inventory data will include clear identification of web site curator(s) and corresponding employee affiliation (Civil Service vs. Contractor). Data will continue to be collected with the intent of importing to the future agency registration application. In addition, the Center's Web Services Shop plans to work more closely with Center web curators to monitor site for content & link currency. Further consolidation of web servers will be pursued as appropriate. The increased emphasis on XML and access via alternate devices (i.e. PDAs) will also impact future web site development. There are plans to implement a chargeback for websites hosted on the Central Web Server. Currently these costs are paid by the Information Services Division as ODIN services. In addition, there is a requirement to establish an infrastructure with appropriate security features to host ITAR web content; this will be further investigated. Efforts will continue to identify content appropriate for the NASA Portal. Various methods will be pursued to increase curator awareness and implementation of newer technologies, standards and policies.

Additional development tools are in process including: Bobby (accessibility evaluator), Web Event (scheduling calendar), and LinkScan (HTML and link validator).

5 Goddard Space Flight Center (GSFC)

5.1INTRODUCTION

This document describes the "AS-IS" architecture supporting Goddard Space Flight Center's (GSFC) business requirements. This is the foundation document describing our Enterprise Architecture.

5.1.1 Architecture Drivers

Within NASA, Information Technology has always been a critical enabling element of program development and management, as well as a pathway for improving business functions. Because IT is crucial to achieving NASA's strategic goals, IT projects must be aligned with the Agency's strategic direction and business plans in order to realize the value of each investment and take advantage of the opportunities that new information technologies promise.

Not only must there be alignment with the agency's mission, program and business needs, there also must be alignment with government-wide architectures, as well as alignment with strategic partners and with industry and government standards that provide for greater interoperability, efficiencies, and quality of service. It is essential that IT projects are planned and managed in a manner that integrates with mainstream Agency processes, including program/project management and budget processes.

GSFC must align itself with the Agency and consequently the Federal Government efforts to improve IT management.

5.1.2 External Drivers

The current Administration has taken an active role in improving the management of IT resources across the government. The President's Management Agenda provides the framework for improved management and coordination of IT and sets forth a number of actions to include development of the Federal Enterprise Architecture, an evaluation process for IT activities, and a budget process that provides rigorous standards for determining the merits of IT investments.

Among the many other externally generated laws, policies, standards and guidance driving the direction of NASA's IT infrastructure are the following:

- The Administration
  - President's Management Agenda
  - Agency Scorecard System

- Legislative Mandates
  - Chief Financial Officers Act of 1990

- Government Performance and Results Act of 1993
- Federal Acquisition Streamlining Act of 1994
- Paperwork Reduction Act of 1995
- Clinger-Cohen Act of 1996
- Government Paperwork Elimination Act of 1998
- Electronic Government Act of 2002

- Government and Industry standards
  - NIST
  - HTML, XML, JAVA, Web services, etc.
  - SSL, PKI, etc.

5.1.3 Internal Drivers

Computing, networking and communications technologies have remained relatively decentralized within NASA with each Center having its own locally optimized "as is" architecture.

The global shift that is taking place in how information and knowledge is used and managed, when coupled with the competition for limited budgets, dictates a more strategic approach to providing information infrastructure services across NASA. In addition to the various external drivers, there are a number of NASA-specific drivers for approaching IT systems more strategically. These include:

- OneNASA (Using IT as an integrating system and provider of common tools)
- Fixing and improving NASA's IT infrastructure to meet the NASA Vision
- Positioning the IT infrastructure to support Agency-wide applications such as IFM
- Ensuring availability of integrated services across Centers
- Providing greater knowledge management and information sharing
- Supporting a collaborative program and management environment
- Achieving reduced cost of services to the customers (programs, projects, and G & A users)
- Improving security
- Delivering consistent and quality services to customers

As a consequence of these many influences and drivers, the NASA Integrated Information Infrastructure Program is a transformation strategy for:

- Managing the IT infrastructure as an integrated architecture
- Providing an infrastructure that can evolve and adapt
- Providing information tools and services that enhance programs and management
- Providing a customer focus to the provisioning of common IT services across NASA
- Enabling effective and efficient integration with Federal e-Government applications

5.1.4 Architecture Components

The GSFC Enterprise Architecture is structured to align with the NASA Enterprise Architecture, and provide the framework for managing the GSFC IT infrastructure. The implementation of the Architecture will guide and integrate the management of the various components (e.g., ODIN, Network, etc).

Figure 14: NASA Integrated Information Infrastructure Work Breakdown Structure

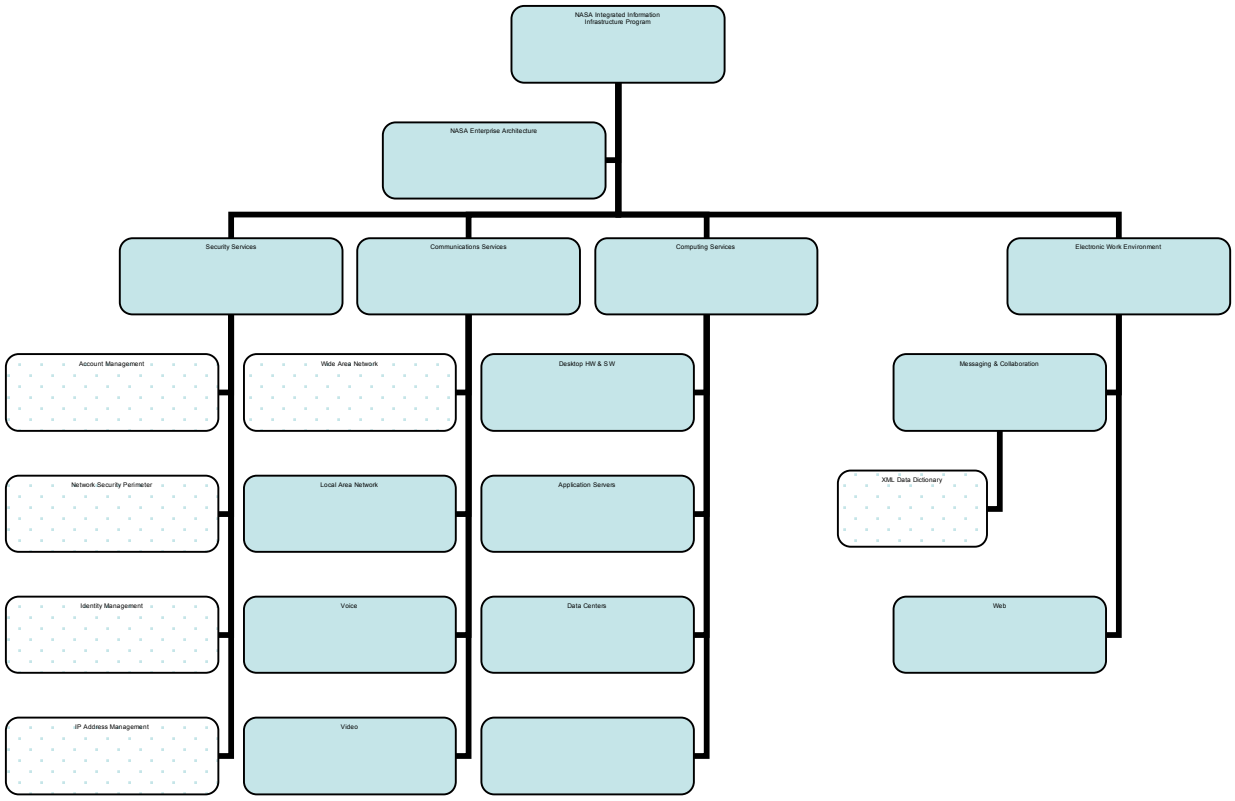

5.2 Computing Services Segment

5.2.1 Desktop Hardware and Software Component

This component is defined as all IT investments required to provide desktop computing services to users to include all Office Automation, IT Infrastructure, and Telecommunications, desktop computing hardware and software (Operating System, applications and utilities), components and services (including design, build, operations, multipurpose help desks, support, and maintenance services). Peripherals such as printers are included. Does not include email and calendaring client & servers, or desktops whose primary use is mission-specific.

Examples are: Desktop computers, laptop computers, operating systems, software (e.g., word processing, spreadsheet, presentation, project management, browser, etc.), the desktop portion of Outsourcing Desktop Initiative for NASA (ODIN), network and personal printers.

GSFC's desktop hardware and software environment can be broken into 3 separate categories: 1) general-purpose desktops used for "corporate" functions, 2) more robust desktops used by scientists and engineers to conduct research and development, as well as "corporate" functions, and 3) desktop systems used in a laboratory environment for data acquisition or process control that are not interoperable with "corporate" systems (these systems are not included in this submission).

5.2.2 As-Is Condition

Currently, GSFC obtains most general-purpose desktop hardware and software services through the Outsourcing Desktop Initiative for NASA (ODIN) Program. ODIN provides desktop hardware and software services for approximately 4,000 users on Center. ODIN is a seat management approach to providing these services, whereby users pay a firm fixed-price monthly charge for their "seat." Shared peripheral services are included in the seat price, entitling the user to use a networked printer within 150 feet of their desktop. All hardware assets and software licenses are owned and managed by the ODIN contractor. Seat prices vary based on service levels and capability ordered by the user, but average $1,948 per year, per user at GSFC.

ODIN desktop seats are classified as follows:
General Purpose 1 (GP-1), General Purpose 2 (GP-2), General Purpose 3 (GP-3), Scientific and Engineering 1 (SE 1), Scientific and Engineering 2 (SE-2).

Hardware: The ODIN-provided desktop hardware at GSFC conforms to the latest approved version of NASA Standard 2805 – "Minimum Hardware Requirements for Interoperability" and is locally controlled by Center configuration control procedures. GSFC is currently on a 4-year technology refreshment schedule, which means that one-fourth of the desktop hardware is replaced with new hardware every year. Therefore, the average age of desktop hardware is 2-years, with a range of 0-4 years. The hardware refreshment offerings are updated every quarter, with benchmarked performance ranging from 50 percent to 100 percent of current market

availability, depending on the seat classification. Benchmark testing is performed by a 3rd party independent verification and validation (IV&V) firm (Alterion, Inc.).

Hardware procured outside of ODIN through GSA or the Scientific and Engineering Workstation Procurement (SEWP) varies. Generally, purchases are made by user preference, resulting in a multitude of chipsets and manufacturer products on site (Gateway, Dell, Micron, Compaq, etc.). It is assumed that non-ODIN users purchase the appropriate desktop capability for their computing needs (e.g. not buying a 3.0ghz machine with 512K RAM and 80 GB hard drive to do office automation functions).

Under ODIN, Apple products constitute approximately 12 percent of the general-purpose desktop platforms at GSFC, with Wintel representing the remaining 88 percent.

Software: The ODIN-provided desktop software conforms to the latest approved version of NASA Standard 2804 and is controlled by Center-level configuration control procedures. Generally, new software versions are rolled-out within 1 year of becoming available from manufacturers. The standard software load at GSFC is currently:

TABLE 4

		Platform
Operating Systems	**Windows 2000 with/SP3**	**Windows**
	Media Player 9	
	Directx 9	
Office Suite	**Office 2000 Standard w/SP3**	
	Outlook 2000/Access 2000	
	Office 2001	**Mac**
Inventory Management	**Asset Insight 3.1r2**	**Windows/Mac**
Email Clients	**Eudora 5.2**	**Windows/Mac**
Web Browsers	**Netscape 4.79**	**Windows/Mac**
	Macromedia Flash Plug-in	
	Internet Explorer 6 w/SP1	**Windows**
Terminal Emulators	**QWS3270**	**Windows**
	TN3270	**Mac**
	niftyTelnet 1.1 SSH R3	**Mac**
Virus Software	**Viruscan 4.5.1 w/SP1**	**Windows**
	Virex 6.1	**Mac**
File Transfer	**WS_FTP Pro 6.06**	**Windows**
Laptop Security	**Computrace**	**Windows**
Backup Client	**Tivoli Storage Manager Client 4.1.3**	**Windows/Mac**
Systems Management Software	**netOctopus 3.6.4**	**Mac**
Calendaring Software	**MeetingMaker 7.1**	**Windows/Mac**
Misc	**Acrobat Reader 5.1**	**Windows/Mac**
	QuickTime 6	**Windows**
	RealPlayer One	**Windows/Mac**
	iTunes 2.0.3	**Mac**
File Compression Software	**WinZip 8.1**	**Windows**
	Stuffit Expander 6.5.1	**Mac**

Non-ODIN users generally comply with NASA Standard 2804, but do not utilize a configuration control process to standardize or control software versions. Often, these users are late with required system upgrades (e.g. Windows 2000) due to funding constraints, or have a higher version of an application or operating system than is incorporated elsewhere in the Agency (e.g. Windows XP).

5.2.3 Systems description and Operational Concept

The current desktop hardware being provided under the ODIN contract is as follows:

TABLE 5-PC SYSTEMS	
GP 2 PC Standard Desktop; Mid-Level: Compaq Evo D510 Convertible Minitower System: Compaq Evo D510 Convertible Minitower, CPU: 2.4 GHz Pentium IV, Cache: 512KB, RAM: 256MB, Video RAM 32MB HDD: 40GB, CD-ROM: 48x, Bus speed: 533MHz, Power Supply: 220 Watts Network Interface Card: 10/100 TX, Video Card: nVidia GeForce 2 MX400 Sound Card: Intel Integrated Audio, Monitor: 17" color .28dpi	SE 1 PC Standard Desktop; Mid-Level: Compaq Evo D510 Convertible Minitower System: Compaq Evo D510 Convertible Minitower, CPU: 2.4 GHz Pentium IV, Cache: 512KB, RAM: 256MB, Video RAM 32MB HDD: 40GB, CD-ROM: 48x, Bus speed: 533MHz, Power Supply: 220 Watts Network Interface Card: 10/100 TX, Video Card: nVidia GeForce 2 MX400 Sound Card: Intel Integrated Audio, Monitor: 17" color .28dpi
GP3 PC Standard Laptop; Mid-Level System Unit: Compaq EVO N800c Laptop, CPU: 1.7GHz Pentium 4, Cache: 512KB, RAM: 256MB SDRAM, Video RAM 32MB HDD: 30 GB, CD-ROM: 48x, Power Supply: LI-Ion battery, Network Interface Card: Sound Card: Integrated, 16 bit stereo Video Card: ATI Mobility Radeon Monitor: 15" CTFT	SE1 PC Standard Desktop; High-Level : Dell GX260T Minitower System: Dell GX260T Minitower, CPU: Pentium 4, 2.8GHz, Cache: 512KB, RAM: 256MB, Video RAM 32MB HDD: 20 GB, CD-ROM: 48x Power Supply: 250 Watts Video Card: ATI Radeon, Network Interface Card: 10/100/1000, Sound Card: Integrated AC Audio, Monitor: 17" color .28dpi
GP3 PC Optional Laptop; High-Level System Unit: Compaq EVO N800c Laptop, CPU: 2GHz Pentium 4, Cache: 512KB, RAM: 256MB SDRAM, Video RAM 32MB HDD: 30 GB, CD-ROM: 48x, Power Supply: LI-Ion battery, Network Interface Card: Sound Card: Integrated Video Card: ATI Mobility Radeon Monitor: 15" CTFT	SE2 PC Standard Desktop; High-Level : Dell GX260T Mini Tower System: Dell GX260T Minitower, CPU: Pentium 4, 2.8GHz, Cache: 512KB, RAM: 256MB, Video RAM 32MB HDD: 20 GB, CD-ROM: 48x Power Supply: 250 Watts Video Card: ATI Radeon, Network Interface Card: 10/100/1000, Sound Card: Integrated AC Audio, Monitor: 17" color .28dpi

GP3 PC Optional Laptop; High-Level Lightweight System Unit: Dell Latitude C400 Laptop, Weight: 3.6lbs, Dimensions: 1"x11.4"x9.4", CPU: 1.2GHz Pentium 3, Cache: 256KB, RAM: 384MB SDRAM, Video RAM 16MB HDD: 20 GB, CD-ROM: 24x External, Power Supply: LI-Ion battery, Network Interface Card: 56K modem, 10/100 Base T Combo, Sound Card: Crystal CS4205 Video Card: UMA Graphics Monitor: 12.1" CTFT	SE 1 PC Optional Laptop; High-Level System Unit: Compaq EVO N800c Laptop, CPU: 2GHz Pentium 4, Cache: 512KB, RAM: 256MB SDRAM, Video RAM 32MB HDD: 30 GB, CD-ROM: 48x, Power Supply: LI-Ion battery, Network Interface Card: Sound Card: Integrated Video Card: ATI Mobility Radeon Monitor: 15" CTFT
Macintosh Systems	
GP2 MAC Standard Desktop; Mid-Level Model: PowerMacintosh G4 Tower CPU: PowerPC G4 867MHz, Cache: 256K L2, 2MB L3, RAM: 256MB, Video RAM: 32MB, HDD: 60GB, Floppy Drive: Optional CD-ROM: DVD/CDRW 32x/16x/10x, Network Card: 10/100/1000, Headset/Microphone: N/A, Sound Card: included, Video Card: GeForce 4 MX, Monitor: 17" Monitor, Speakers: Apple	SE 1 MAC Standard Desktop; Mid-Level Model: PowerMacintosh G4 Tower CPU: PowerPC G4 867MHz, Cache: 256K L2, 2MB L3, RAM: 256MB, Video RAM: 32MB, HDD: 60GB, Floppy Drive: Optional CD-ROM: DVD/CDRW 32x/16x/10x, Network Card: 10/100/1000, Headset/Microphone: N/A, Sound Card: included, Video Card: GeForce 4 MX, Monitor: 17" Monitor, Speakers: Apple
GP3 MAC Standard Laptop; Mid-Level Model: Ti PowerBook G4, CPU: 800MHz PowerPC G4, Cache: 256KB, RAM: 512MB, HDD: 40GB, Video RAM: 32MB, CD-ROM:DVD/CD-RW 24X/8x/8x, NIC: 10/100/1000 MB, Sound Card: built in, Speakers: Stereo speakers, Monitor: 15.2" LCD	GP3 MAC Optional Laptop; High-Level Combo Model: Ti PowerBook G4, CPU: 800MHz PowerPC G4, Cache: 256KB L2/1MB L3, RAM: 512MB, HDD: 40GB, Video RAM: 32MB SDRAM, CD-ROM:DVD 8x / CD-RW 24x/8x/8x, NIC: 10/100/1000 MB, Sound Card: built in, Video Card: ATI Mobility Radeon, Speakers: Stereo speakers, Monitor: 15.2" LCD

GP3 MAC Optional Laptop; High-Level Model: Ti PowerBook G4, CPU: 800MHz PowerPC G4, Cache: 256KB, RAM: 512MB, HDD: 40GB, Video RAM: 32MB, CD-ROM:DVD 8x / CD-RW 24x/8x/8x, NIC: 10/100/1000 MB, Sound Card: built in, Video Card: ATI Mobility Radeon, Speakers: Stereo speakers, Monitor: 15.2" LCD	SE 1 MAC Standard Desktop; High-Level Model: PowerMacintosh G4 Tower CPU: PowerPC G4 867MHz, Cache: 256K L2, 2MB L3, RAM: 256MB, Video RAM: 32MB, HDD: 60GB, Floppy Drive: Optional CD-ROM: CD-RW 32x/16x/10x, Network Card: 10/100/1000, Headset/Microphone: N/A, Sound Card: included, Video Card: GeForce 4 MX, Monitor: 17" Monitor, Speakers: Apple Other: 56K Modem, 11 Mb wireless

5.2.4 Systems and Support

For ODIN systems, help desk support is provided from the ODIN vendor's central help desk located in Cleveland, Ohio. All user help and trouble calls are made to this location, logged into a Remedy system, and then resolved accordingly. The help desk is also responsible for interfacing with other help desks as necessary (IFM, NACC, etc). Service levels define the return to service timeframe for users and can range from 2 hours (Critical to 3 working days (Basic). The standard service level at GSFC is 8 working hours (Premium). The following table indicates the service level offerings that are available for users enrolled for a typical seat.

TABLE 6

Standard Services:	
Performance rating	85% performance against market benchmark
ODIN Application Software	Standard application software suite
Hardware Maintenance	Premium, restore to service within 8 work hours
System Software Maintenance	Premium, restore to service within 8 work hours
ODIN-Appl Software Maintenace	Regular, restore to service by close of next business day
Hardware Technology Refresh	Premium, refreshment at least every 3 years
Software Technology Refresh	Regular, refreshment within 1 year of release
Moves, Adds, Changes	Regular (see contract)
LAN	No ODIN supplied network connection
	(however, ODIN provides cable connection to jack)
Desktop Conferencing	None, no desktop conferencing
Integrated Customer Support/Help Desk	Regular, full services 6 am - 6 pm local time, 1 hr ack request
Training	None, no training is provided
System Administration	Regular, basic security monitoring and management
Shared Peripheral Services	Basic, access to networked BW printer w/in 250 ft
File Services	Basic, 500 mb of server file space per seat
Local Data Backup and Restore	Basic, weekly backup of user data
Optional Services:	
ODIN Application Software	None
Hardware Maintenance	None, no hardware maintenance provided
	Basic, restore to service within 3 working days
	Regular, restore to service by close of next business day
	Enhanced, restore to service within 4 work hours
	Critical, restore to service within 2 contiguous hours
System Software Maintenance	None, no software maintenance provided
	Basic, restore to service within 3 working days
	Regular, restore to service by close of next business day
	Enhanced, restore to service within 4 work hours
	Critical, restore to service within 2 contiguous hours
ODIN-Appl Software Maintenace	None, no support for ODIN provided application software
	Basic, restore to service within 3 working days

	Premium, restore to service within 8 work hours
	Enhanced, restore to service within 4 work hours
	Critical, restore to service within 2 contiguous hours
Hardware Technology Refresh	Basic, refreshment at least every 5 years
	Regular, refreshment at least every 4 years
	Enhanced, refreshment at least every 1. 5 years
Software Technology Refresh	Enhanced, see contract definition
Moves, Adds, Changes	Enhanced (see contract definition)
LAN	
Desktop Conferencing	Basic audio/video/data teleconferencing <384kbps
	Enhanced audio/video/data teleconferencing >384kbps
Integrated Customer Support/Help Desk	Basic, service request call only 6am - 6pm workdays
	Enhanced, full services 24 x 7, ack request w/in 30 minutes
Training	Basic, familiarization with major upgrades
System Administration	Basic, protocol administration and network security only
	Enhanced, see contract definition
Shared Peripheral Services	None, no shared peripheral services
	Regular, access to B/W w/in 150 ft and color w/in bldg
	Enhanced, access to B/W w/in 60 ft and color same floor
File Services	None, no file services
	Regular, 1 gb per user
	Enhanced, 2.5 gb per user
Local Data Backup and Restore	None, no local backup and restore
	Regular, backups performed daily
	Enhanced, backup entire local disk daily

For desk side support, the ODIN vendor employs a “zone” approach. Each zone consists of multiple buildings in a common location, and employs a Tier II technician and a team of Tier I technicians to provide support to users within the zone.

Non-ODIN users generally rely on a local support service contractor to provide system administration to desktop systems under a cost-plus award fee contract. No help desk or Remedy system is in place to take calls or track service tickets. Users typically call or visit the desktop system administrator directly to schedule service. No service level agreements are in place. Instead, a best effort approach is utilized to restore the desktop system to operation as soon as possible.

5.2.5 Facilities

ODIN on-site personnel are located in Building 12, as well as in some temporary trailers adjacent to Building 12 on the GSFC campus. Total area occupied by these personnel is approximately 2,500 square feet.

Non-ODIN desktop system administrators are co-located with the programs or projects they serve. It is estimated that approximately 5,000 square feet is occupied by these desktop system administrators.

5.2.6 Technology Flashpoints

Flat panel monitors: Currently, ODIN provides 17-inch cathode ray tube (CRT) monitors as part of the standard seat. Flat panel monitors utilize significantly less energy and produce less heat, thus reducing utility bills. They also take up less space and are easier on users' eyes. GSFC intends to gradually replace CRT monitors with flat panel monitors over the next 3-year technology refreshment cycle. A 15-inch flat panel monitor is approximately equal in cost to a 17-inch CRT monitor, with very little difference in viewable area. Therefore, little cost impact is anticipated with this infusion.

5.2.7 Compliance

All ODIN general purpose desktop systems comply with the following:
NASA Standard 2804, Minimum Software Requirements for Interoperability
NASA Standard 2805, Minimum Hardware Requirements for Interoperability
NASA Procedures and Guidelines 2810, Security of Information Technology
Goddard Procedures and Guidelines 2810, Security of Information Technology
Integrated Financial Management (IFM) Desktop Requirements

5.2.8 Capabilities

General purpose desktops have the following capabilities:

Word Processing
Spreadsheet
Presentation
Database
E-Mail
Web Browser
Multimedia
PDF Viewer

Additional capabilities of select users are as follows:

Project Management
    Calendaring

5.2.9 To Be Condition

The planned "to be" condition of desktop computing is for all Center general purpose desktops to conform to NASA Desktop Standards, once the standards are established and approved. Also, it is expected that in 2006 NASA will utilize one vendor for desktop support services and that GSFC will be in line with this strategy. It is expected that these services will be managed by the NASA Shared Services Center (NSSC).

5.2.10 Data Center Component

GSFC does not have IT systems that meet the definition of a data center.

5.3 Communications Segment

5.3.1 Wide Area Network Component

The GSFC wide area architecture consists of circuit based communications with component Center at WFF, GISS and IV&V. All other wide area access is obtained through NISN.

5.3.2 Local Area Network Component

The Center Network Environment (CNE) provides the Local Area Network Component at the Goddard Space Flight Center. The CNE provides connectivity and enterprise services to all of Goddard Space Flight Center (GSFC), including the Greenbelt campus and the Wallops Flight Facility (WFF).

5.3.3 As is Condition

The CNE is entering a stable period of operations and maintenance with no major upgrades anticipated over the remainder of its useful lifetime. The CNE supports approximately 14,000 end-users at the GSFC campus and another 2,000 end-users at WFF. The CNE project is an operations and maintenance mode with support provided by ACS, the ODIN contractor for GSFC.

5.3.4 Systems Description and Operational Concept

The CNE is defined to consist of the following functional elements:

<u>Network Infrastructure</u>

Network Backbone – The network backbone consisting of the Communication Switch Routers (CSRs), the Project FDDI Ring and the physical fiber connections between them and the Building Switches and/or Routers.

WAN/MAN Architecture – The external interfaces of the institutional network, consisting of the WAN Routers, the WAN FDDI ISOLAN, the WAN Ethernet ISOLAN, the MAN Routers, and the physical connections between them and the Center's external network provider (NISN), as well as the connections between the WAN/MAN architecture and non-CNE managed networks. The MAN connection also includes the SMDS, FNS and Frame Relay services provided to local off-base customers. This does not include the network communication hardware at the remote MAN sites.

Building Network – The building network infrastructure, consisting of the Building Switch and/or Router, Floor Switches/Hubs and the physical connectivity linking them to individual users and the CNE Backbone.

Remote Access Services – The infrastructure providing remote network access capability to the CNE Network consisting of the Goddard Connect dial-up server, management stations, and the physical connectivity between this equipment and the external ISDN Primary Rate Interfaces (PRIs) and the Center's Administrative Voice System, as well as the Center Virtual Private Network (VPN) server and client software

Domain Name Service (DNS)/IP Management – The infrastructure providing IP address/name resolution, consisting of a primary and backup Name Servers, and the engineering required for the effective management and engineering of the Center's IP address space.

Internet Services – The infrastructure providing the Center with electronic mail, list and directory services, including, as a minimum, the Center POP server, the X.500 Directory Server, Email Reflector System (ERS), the Majordomo List Service and the network connectivity interfacing them to the CNE.

Network Performance – The equipment and software required to adequately track and assess the performance of the network, including both long and short-term trend analyses.

5.3.5 Security

The equipment, policy and procedures required to adequately protect the CNE, it services and users.

Firewall Architecture – The infrastructure protecting the CNE, its users and services from external, non-CNE networks.

Internet Service Security – The infrastructure protecting the CNE Internet services from abuse and misuse, included virus scanning, spam prevention and other tools required to secure and protect CNE Internet Services.

5.3.6 Production Network Diagram

Figure 15, Production Network Diagram

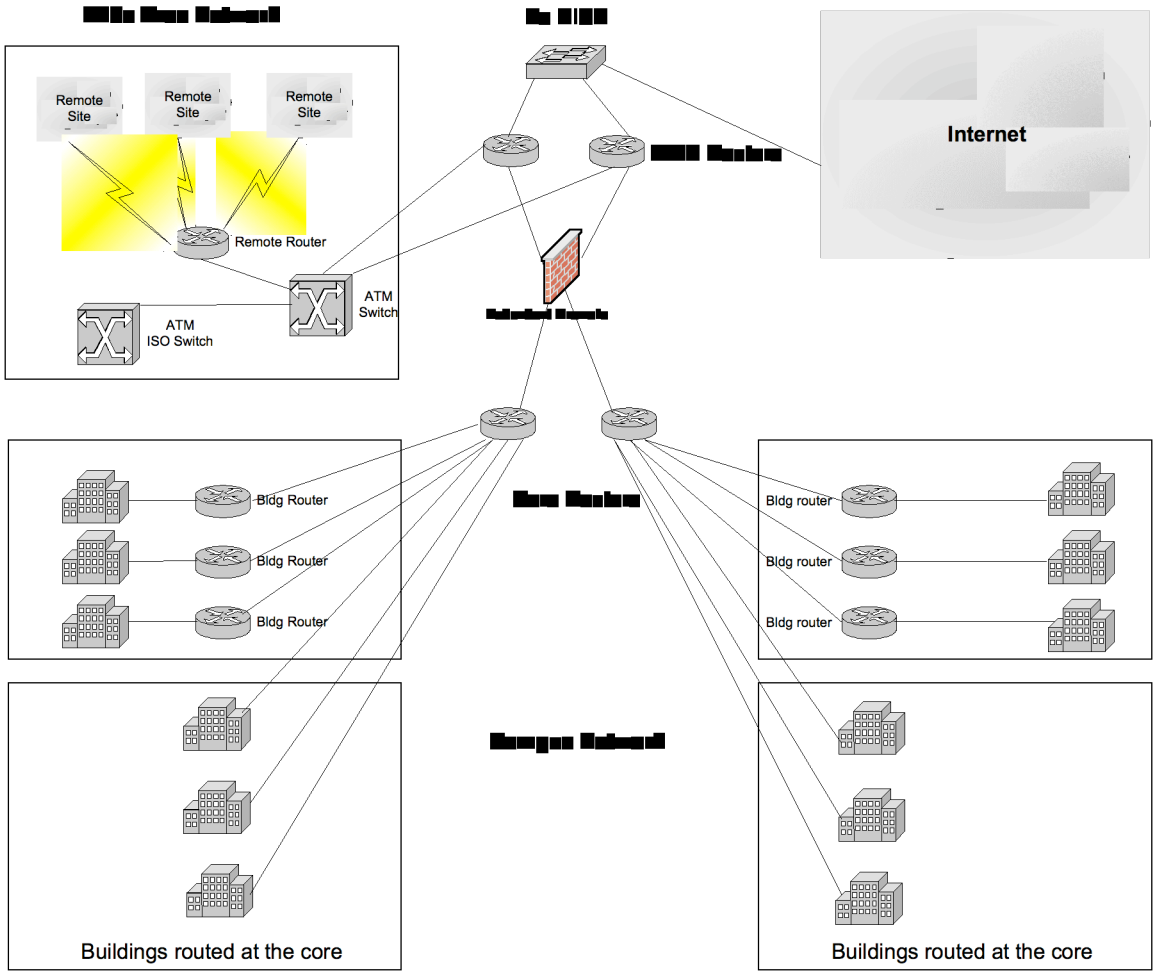

Figure 16

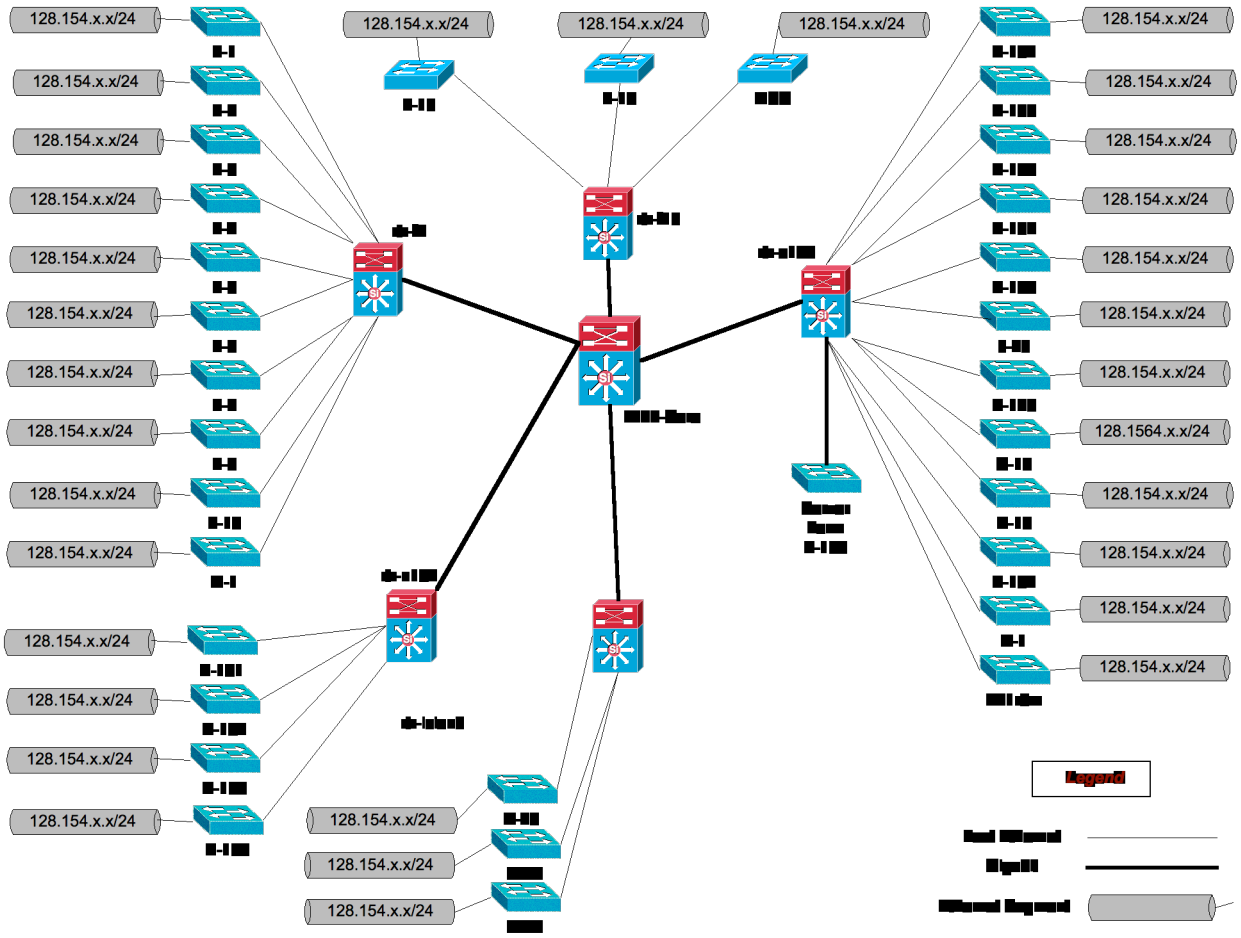

5.3.7 Systems and Support

The CNE is the administrative backbone network for use by GSFC and WFF employees. It is used to provide e-mail, World-Wide Web and file and print services.

5.3.8 Facilities

The CNE facilities consist of those areas where CNE equipment and services are located and currently include GSFC Building 1 Room 45/49, WFF Building F2, Building Main Interface Rooms, and Floor Telecommunications Closets.

5.3.9 Technology Flashpoints

Voice over IP is the looming technology flashpoint for our telecommunications architecture. The convergence of voice, video and data into a single infrastructure while an evolutionary process could present a flashpoint depending upon requirements.

5.3.10 Compliance

The CNE complies with the security requirements of NASA Procedures and Guidelines (NPG 2810.1). The CNE utilizes COTS packages and a commitment to industry standards to promote interoperability and flexibility in choosing vendors.

5.3.11 Capabilities

The basic connections supported are 10Mbps Switched and/or 100Mbps Switched connectivity on an as-available basis. Not all buildings or floors at GSFC and WFF are capable of supporting 10Mbps Switched and/or 100Mbps Switched connectivity.

5.3.12 Voice Component

Voice communications for GSFC are provided in the following areas:

- Telephone switches at Greenbelt (GBLT) and Wallops locations access the local Verizon Central Offices to obtain access to local calling. Long distance, international calls and Voice Teleconferencing services are accessed through MCI which is an FTS-2001 Wide area service provided by NISN/Marshall Space Flight Center (MSFC).

- Cell Phones and pagers are acquired through several options. The customer may choose the ODIN desktop Contractor or an outside vendor.

- Facsimile machines formally were purchased and maintained by the NISN/MSFC. Effective FY04, customers will have the option of acquiring their own machines either through ODIN or an outside vendor.

- Toll free “800” services are acquired though NISN/MSFC.

- The operator attendants for both sites are located in GBLT.

- The two-way radio system contract at GBLT is managed by Code 290 and maintained by a contractor.

5.3.13 As Is Condition

The current Siemens switches provide analog and digital voice service to users at both WFF and GBLT. There are approximately 13,000 users at these locations that are provided Phonemail and attendant service. The two locations are linked by an existing ATM backbone that is used for various communications requirements.

- The local and long distance services are provided to all users at both locations by class-of-service.
- Cell phones and pagers are acquired by organizations on an "as-needed" basis for individuals.
- Facsimile machines are located in each organization and have access to local and long distance connectivity through the Siemens switches.
- Toll free services have been installed for access into the Phonemail systems at both locations and for the dial-in connection to the network.
- Attendant coverage is from 7:00 AM until 7:00 PM, Monday through Friday with IVR 24 hour coverage.
- The two-way radio system at GBLT and WFF is a product of Motorola. The Health and Safety, Security and the Facilities Divisions at both locations use the system.

5.3.14 System Description and Operational Concept

The Siemens configuration at GBLT consists of six (6) Hicom 300 Model 80's and one (1) model 30. Four (4) of these nodes are operating out of the Building 1 switch room and two (2) are operating out of the Building 32 switch room in support of the East Campus. The Model 30 is operating in the Aerospace Building, located about two miles from GBLT, and is connected back to Building 1 by a microwave link. There are eleven (11) nodes of Siemens Phonemail in support of voicemail. Because GBLT's buildings are in a campus environment and some buildings and areas are remote, it has been necessary to install Remote Communications Modules (RCMs) in Buildings 7,10, 15, 29, 25, 16W and Areas 100/200 and 300/400. Each RCM is supported with backup power supplies to maintain continuous system operations.

The Siemens configuration at WFF consists of one (1) Hicom 300E operating out of Building F-2, and one (1) operating on the Island in Building V-10. There is a node of Siemens Phonemail located in each of the switch rooms in support of voicemail. Remote Communications Modules are located in Buildings E-106, F-10, M-16, N-162, N-159, V-24, U-5 and X-75. Each RCM is supported with backup power supplies to maintain continuous system operations.

The systems at both GBLT and WFF were designed for redundancy at all locations to maintain .9995 reliability as required for mission services and utilizes the ATM connection between GBLT and WFF for connectivity between locations.

The system offers four (4) different types of telephone instruments to the users. The lowest level of telephone is the Optiset E Entry that is located in lunchrooms, lobbies, mechanical rooms, etc. The second instrument is the Optiset E Basic, which is the most commonly used. The third instrument is the Optiset E Standard that has an LED display for caller ID and other options. The fourth instrument is the Optiset E Advance Plus that allows for multi line appearances and headsets.

The information management system used on both of these systems at each location is COMSOFT. COMSOFT is a small business company that has provided services to GBLT and WFF since 1988. The software was COTS and has been customized to meet changing requirements. It is presently being groomed to accept full cost accounting.

Both locations are supported by operator support at the GBLT location. An Interactive Voice Response System (IVR) is in place to handle many of the calls and is in service twenty-four hours a day for assistance.

Figure 17

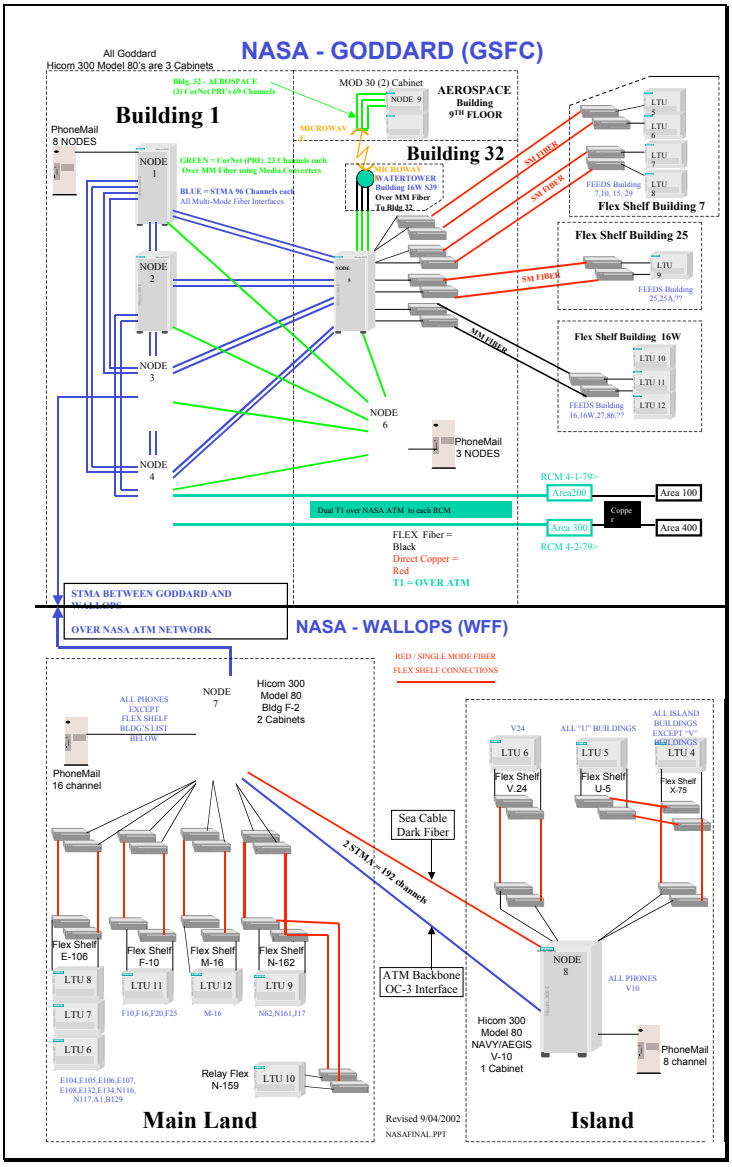

5.3.15 Production Network Diagram

Figure 18 is a general diagram of the Siemens switches connectivity to internal peripherals and external trunking at both GBLT and WFF. The diagram indicates how the switches connect to the Public Switched network to attain the local and long distance services as well as operator support, two-way radio system and the public address system at WFF.

Figure 18

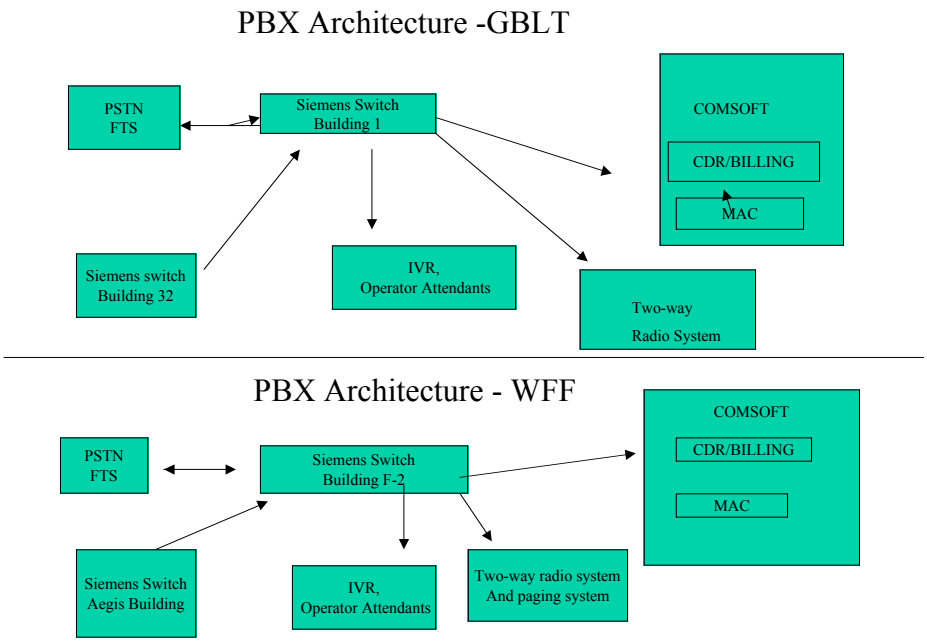

5.3.16 Systems and Support

The management and responsibility of the telecommunications systems at GBLT and WFF is in the Code 290 organization. The Contracting Officer's Technical Representative (COTR) in Code 291 manages and directs the Contractor in the day-to-day operations of the contract. The GBLT and WFF telecommunications systems are maintained and operated by the Siemens Enterprise Networks of Reston, Virginia. They provide maintenance on the installed systems on a preventive (scheduled) and remedial (routine and emergency call-out) basis. Additional installation services, normal day-to-day moves and changes, any new system design, testing and cutover of any required expansion shall also be provided as necessary. Response time for emergency remedial maintenance is 4 hours while non-emergency remedial maintenance response time is 24 hours.

- The local, long distance, voice teleconferencing services at both GBLT and WFF are managed by the Code 290 organization. Verizon provides local services while MCI provides the long distance and teleconferencing services via the GSA FTS-2001.

- A portion of the cell phones and pagers are acquired through ODIN, which is a Code 290 managed contract. The remainder is acquired directly by the user from an outside vendor.

- Facsimile machines, which were formally managed through a MSFC contract, will be acquired either through ODIN or a vendor of choice by the individual users beginning FY04.

- The toll free services are managed by MSFC.

- The Center Telephone Operator Contract is managed by the Code 290 organization. Hilda Management, Inc., an 8a firm, provides the service for both GBLT and WFF.

- The two-way radio system at GBLT and WFF is managed by the Code 290 organization. Separate vendors for each site provide maintenance.

5.3.17 Facilities

NASA provides switch rooms and telephone/network closets for the vendor at both GBLT and WFF. Commercial power is provided by NASA's existing distribution system. Siemens provides Battery backup in the event of a power outage.

The local and long distance trunks terminate in the main switch rooms at GBLT and WFF for connectivity to the PBX's.

The operator attendants are housed in Building 16W at GBLT in support of both locations.

NASA provides space for antennas and equipment at both locations.

5.3.18 Technology Flashpoints

Voice over IP is the looming technology flashpoint for our telecommunications architecture. The convergence of voice, video and data into a single infrastructure while an evolutionary process could present a flashpoint depending upon requirements.

5.3.19 Compliance

The telecommunications systems at GBLT and WFF are in compliance with standards for telecommunication activities on federal buildings and grounds. They are as follows:

- FIPS Publication Standard (Federal Information Processing Standard Publication) 174 actually EIA/TIA-568A
- FIPS Publication Standard 175 actually EIA/TIA 569
- FIPS Publication Standard 176 actually ANSI/EIA/TIA-570
- FIPS Publication Standard 195 actually ANSI/EIA/TIA-607
- FIPS Publication Standard 187 actually ANSI/EIA/TIA-606
- NPG 8820.2c Facilities Engineering Handbook NASA Publication and
- NPG 2810.1 Security of Information Technology

5.3.20 Capabilities

These switches have all of the basic system and station features that are available with commercial PBX's.

- Core System Features
    - Expandability of ports
    - Analog and Digital capability
    - Redundancy
    - Caller ID with Name
    - Basic Rate ISDN

- Adjunct Features
    - Voice mail system
    - Attendance Console support
    - CDR collection and reporting
    - Interactive Voice System (IVR)

- Station Features
    - Conference call
    - Consultation/hold
    - Camp-on
    - System Speed Calling
    - Station Speed calling
    - Call pick-up
    - Call forward
    - And many others

- The local and long distance and voice telecommunications services provided by Verizon and MCI are available 24 hours a day.

- Cell phones and pagers each have varying service plans that the user can choose from.

- Facsimile machines are have full-duplex capability and are available 24 hours a day for use.

- The toll free service is available 24 hours a day at both locations.

- The operators can place international calls and make conferences for customers, Monday through Friday, from 7:00 AM until 7:00 PM.

5.3.21 To Be Condition

Although the existing telephone switches were acquired and installed in the fall of 2001, the Agency has directed GBLT to look into Voice Over IP ((VoIP) technology. Tests are being performed to see if this technology is a viable option for the future.

Facsimile machines will be purchased by the individual organizations beginning FY04.

The two-way radio systems at both GBLT and WFF will be replaced within the next four years.

5.3.22 Video Component

The video component covers the existing video teleconference capabilities and television production for NASA TV, Public Affairs, and science projects. The conversion to digital video production and distribution, both standard definition (SD) and high definition (HD), is a part of the Digital TV (DTV) project also covered in this component.

5.3.23 As is Condition

The television production can create and edit either video on analog tape or in a digital SD environment. All video products are stored and distributed in analog format. The DTV project, in the future, will provide a complete digital video environment from recording to editing to distribution. The Low Bandwidth Video (LBV) teleconferencing system provides real-time face-to-face meeting capabilities across the agency. GSFC has two Video Teleconferencing Media rooms, which are interfaced to the control system at MSFC.

5.3.24 Systems description and Operational Concept

The heart of the television production function is the production studio. This is a high-profile facility where resident and visiting scientists and VIPs participate in interviews that are transmitted in real-time over the NASA TV satellite system. While these interviews are typically conducted end-to-end with television personalities from the major Networks and affiliates, they are also watched in real-time by countless cable and home satellite viewers. The studio production resources can support scripted productions, both live and recorded, for television programming initiatives for the GSFC science, administrative and educational client communities.

Figure 19

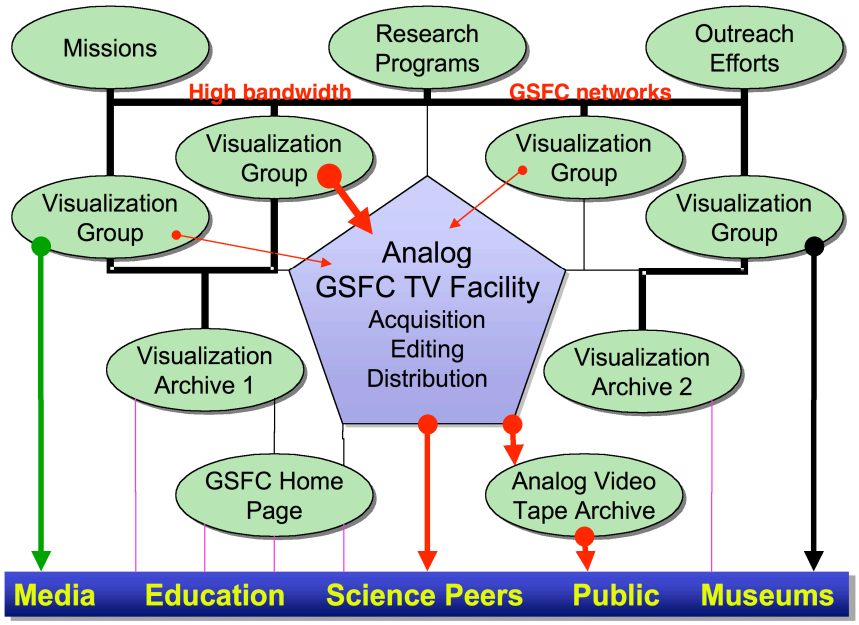

Creative arrangement of diverse elements including graphic production, video effects, titling, character generation, and the application of voice-over narration and music tracks are all achieved in the editing and post-production suites. It is there where raw video footage and computer animations & renderings are turned into finished video products to the customer's specifications.

The DTV environment will operate in much the same way as the existing television environment, only replacing all analog capabilities with the digital capabilities, incorporating both SD and HD formats.

Figure 20

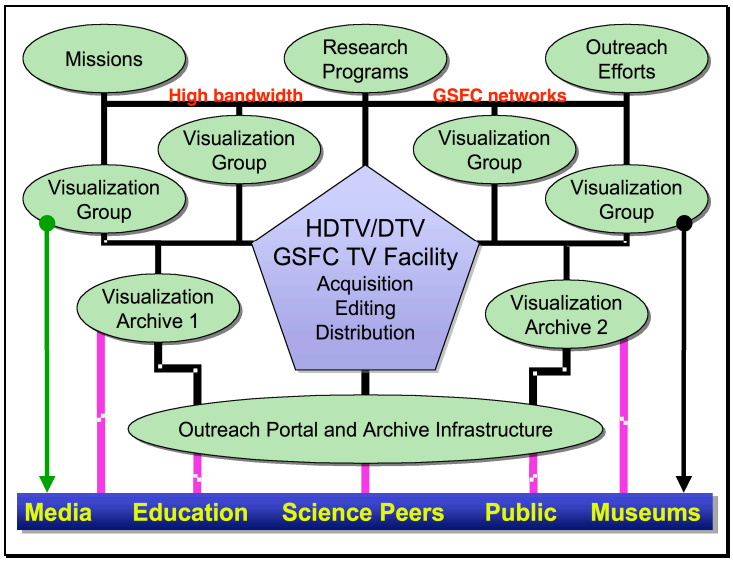

The ViTS network is interconnected through the Siemens telephone switch. Multipoint teleconferences are scheduled through the ViTS operation center, which coordinates and connects the multiple conferencing units.

5.3.25 Production Network Diagram

Video is initially created using analog video cameras or received from outside production in tape format. The TV production facility passes video products on tape to editing stations where it is converted into a digital file and stored in a storage area network (SAN). Editors can call up various video files for editing a final product and converted back to tape for analog distribution. Animation is created directly on animation workstations and stored on the SAN for production access.

Figure 21, Production Network Diagram

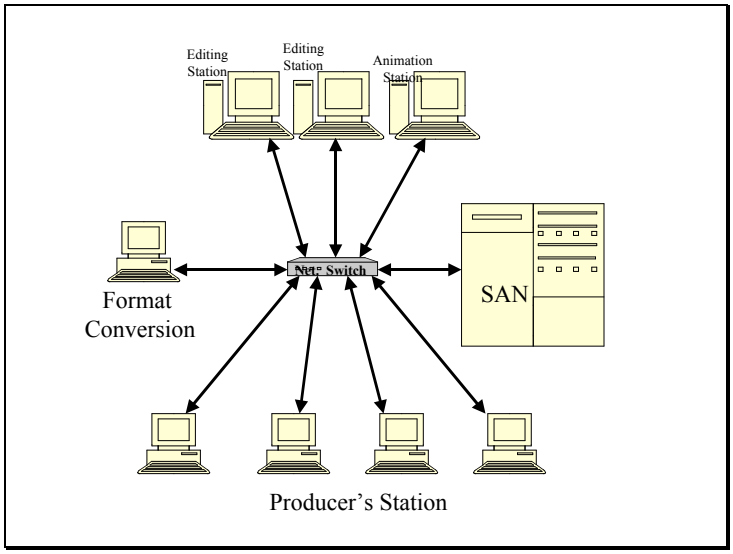

In order to meet agency DTV directives and requirements, equipment will be procured to provide basic SD acquisition, conversion and distribution, as well as hardware required for the NASA TV multi-channel multiplexing efforts. Encoders/decoders shall be provided by the MSFC for use by GSFC. This will be in the form of SDTV cameras, recorders, format converters, network equipment, and media creation (DVD writers, digital tape systems). In the outlying years, this equipment will be integrated into the design of the production facility. HDTV system hardware will also be procured during the initial period with an eye toward providing an HDTV processing capability for all systems other than acquisition.

Throughout the implementation of the DTV facilities, the center's administrative data network infrastructure will be enhanced to provide broadcast distribution to the individual desktop. This will reduce the number of televisions to be replaced and the need to upgrade the video cable infrastructure. During the transition, the digital transmission will be converted to analog and distributed on the existing video network.

Figure 22

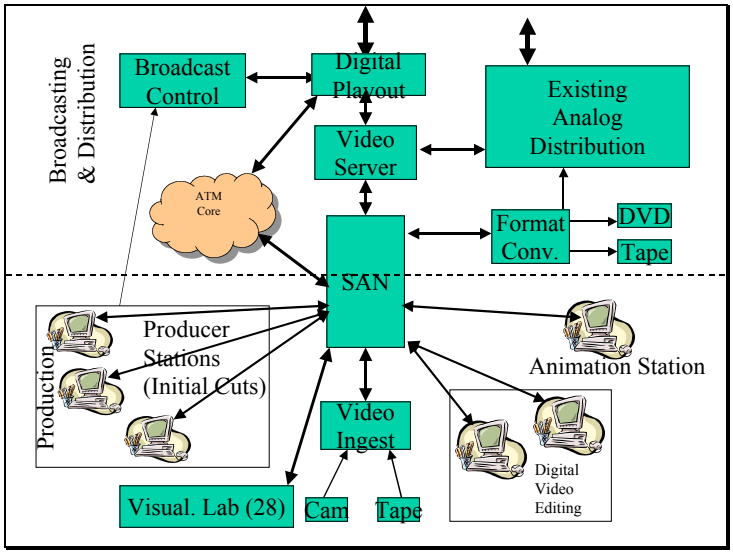

Except for the ViTS rooms, the videoconferencing systems at GSFC are ISDN BRI and are connected to the Siemens HiCom telephone switch. FTS and local access trunking is shared with the center administrative voice service. Installation of these systems is handled like the installation of any administrative telephone except that, in general, new jacks need to be installed since these systems are not typically located in pre-wired offices and are typically installed in newly remodeled conference rooms.

Figure 23

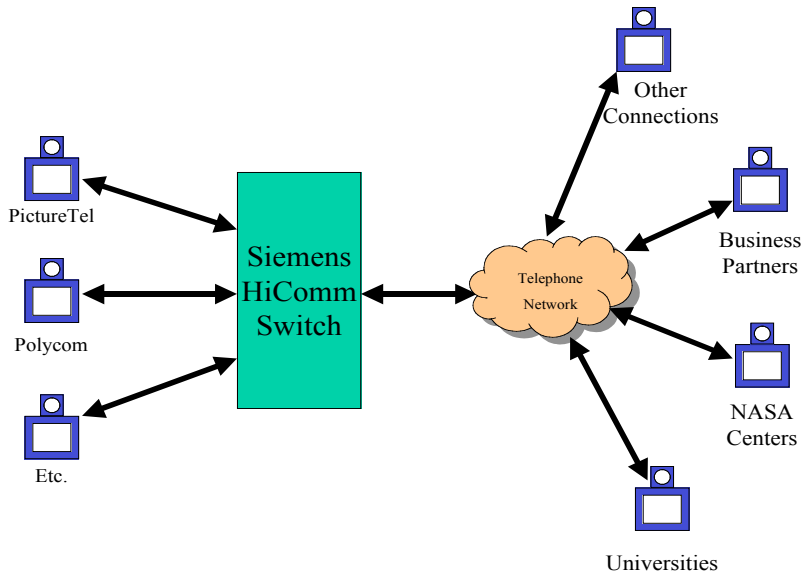

5.3.26 Systems and Support

Systems and Support requirements are provided by two areas:

- Operations
- Engineering

Video operations are provided through the Technical Information Services Branch, Code 293. Video Engineering for TV production, ViTS, and DTV is provided by the NASA Communications Branch, Code 291.

5.3.27 Facilities

Television production operations currently reside in Building 28, with the supporting staff required to travel to and from Buildings 8, 88A and a trailer adjacent to Building 88. Production quality and flexibility are severely limited by the existing size and shape of the studio, as well as the lack of a suitable production control room. Ceiling height is a major issue

since it directly affects the ability to provide proper lighting conditions for professional live television production.

Post-production operations primarily reside in Building 8, however in addition to a very limited workspace, production efficiency is hampered by the need to travel to and from other buildings, including Buildings 28 and 13, in order to collaborate with customers and graphics animation personnel. This inefficiency affects the ability to keep up with the workload demands of the growing customer base for visual products. A marked increase in the post-production work load, as well as requirements for high-definition products are the driving forces for an additional edit room and an acoustically isolated overdub booth.

The graphics animation function currently resides in Building 13. As noted for the post-production and editing functions, the actual customer base resides in other buildings. Many of the clients that use the animation products reside in Building 28. Collaboration with other animators in Building 28 occurs on a regular basis. Ongoing contact is necessary with post-production and administrative/management personnel who reside in Building 8.

Full ViTS rooms are located in Building 8 and Building 26. LBV ViTS units are located in conference rooms throughout the center.

The Goddard Digital Television Center, planned for construction in Building 28, is a major activity of the overall GSFC DTV initiative, which is being implemented under the leadership of Code 290. This effort will integrate the existing distributed and fragmented television operations, and the technical, production and management staff into a single integrated facility that will support all of the visualization efforts at GSFC that entail television involvement. Current plans call for the facility to occupy space in the North wing of Building 28, located on the GSFC main campus. Figure-1 illustrates the block layout design of the Goddard Digital Television Center.

5.3.28 Technology Flashpoints

There are four architectural "flashpoints" that have direct impact on video projects. These are as follows:

- Interface compatibility
- Technology conversion/transition
- Network security
- Obsolescence

These flashpoints are used in the selection of video equipment and systems. By strictly following federal and industry standards, the first two flashpoints can be greatly reduced in severity. By utilizing firewalls and adhering to all IT security guidelines, where applicable, the video network environment remains secure. Obsolescence is being mitigated by the DTV project in it's efforts to upgrade the entire television production and distribution system from analog to a fully digital environment, providing technical refreshing of equipment and software on a frequent basis.

5.3.29 Compliance

The use of COTS packages and a commitment to federal and industry standards promotes interoperability and flexibility in choosing vendors. Leveraging existing infrastructures as much as possible promotes resource sharing.

5.3.30 Capabilities

The capabilities shared by the Agency include:

- Television production of:
    - Interviews
    - Speeches
    - Research announcements
    - Scientific Discoveries
    - Man flight
- Video editing
- Animation creation
- Video creation
- Intra-agency conferencing

5.3.31 To Be Condition

The television production and distribution system will be undergoing a complete transition from a mostly analog environment to a fully digital environment of the next five years through the efforts of the DTV project.

5.4 Electronic Work Environment Segment

5.4.1 Messaging and Collaboration

GSFC's messaging and collaboration component consists of email services provided through ACS as part of the ODIN contract.

5.4.2 As is Condition

Email services are currently provided via the following hardware identified in the Hardware & Software Component section running Qpopper software. There are currently 1,500 users per server with reasonable growth capacity. We also utilize MacAfee E500 Web Appliances for virus filtering and spam blocking.

5.4.3 Systems Description and Operational Concept

TABLE 7

Server	Function	Qty	Processors	RAM	Storage
E-250	**POP**	**3**	**2**	**1GB**	**72GB**
Sparc 5	**Relay**	**1**	**1**	**512MB**	**18GB**
Sparc 10	**Relay**	**2**	**1**	**512MB**	**18GB**
E-450	**X500**	**1**	**2**	**2GB**	**40GB**
Compaq Linux	**Listserv**	**1**	**2**	**1GB**	**3GB**

5.4.4 Systems and Support

The systems are supported via the ODIN contract.

5.4.5 Facilities

Servers are hosted in our computer facility to ensure climate controls and power requirements are met.

5.4.6 Technology Flashpoints

The only flashpoint for this effort is the current pilot that will eventually change the service provision model.

5.4.7 Capabilities

E-mail
Virus & Spam filtering
X.500 services

5.4.8 To Be Condition

The future of collaboration rests with the ePresence initiative currently in the pilot phase.

5.4.9 Public Web Component

Public Web services consist of those Web Sites or applications that are designed for the purpose of public outreach. They do not include science or mission related Web sites. At GSFC, public Web services include the Center and Facility home pages:
www.gsfc.nasa.gov
www.giss.nasa.gov
www.ivv.nasa.gov
www.wff.nasa.gov

5.4.10 As is Condition

The purpose of the Center and Facility Home Pages is to provide general information about the Center and news and feature articles on various topics of interest to the general public. Of these, the Goddard Home Page has the most content; IV&V the least. The facilities may have 1 or 2 articles a month, while the Center has 1 to 2 per week.

5.4.11 Systems and Support

System and support requirements are typical of Web sites, and are broken into three major areas:

- Content Creation
- Content Maintenance
- System Software & Hardware Maintenance

Content Creation is done by Public Affairs personnel, and includes the creation of press releases, writing of news articles, etc. This work is often distributed among various job functions, such as writers, editors, and producers.

Content Maintenance is usually done by a single webmaster, usually a Public Affairs person, who is responsible for fixing broken links and making sure the content is up to date.

System Software & Hardware Maintenance is often done by a separate team. In the case of the Goddard Home Page, it is a service provided by the Application Development Branch, and includes typical system administration functions, such as backup and recovery services, security, software patches, Web server software configuration, and hardware maintenance.

5.4.12 Facilities

All sites utilize existing facilities to support Web services.

5.4.13 Technology Flashpoints

None.

5.4.14 Compliance

All Center and Facility home pages comply with NASA web policy and support industry standards.

5.4.15 Capabilities

All Center and Facility home pages are static sites, in that they are not applications and do not utilize automated processes or generate HTML on the fly from a database. Their purpose is to provide information, such as:

- News Articles
- Information on upcoming events

- Press Releases
- Images & Multimedia
- Media Information
- Information about the center
- Information about doing business with the Center
- Maps & Directions

5.4.16 To Be Condition

It is expected that all NASA Center and Facility home pages will eventually be incorporated into the One NASA Web Portal. Owners of these sites are working with the Portal team to achieve this goal.

5.4.17 References

NASA Procedures and Guidelines (NPG) 2810.1

6 Headquarters (HQ)

6.1 Computing Services Segment

6.1.1 Desktop Hardware and Software Component

Desktop Hardware and Software Component consists of: Desktop computers, laptop computers, operating systems, software (e.g., word processing, spreadsheet, presentation, project management, browser, etc.) The Desktop portion of Outsourcing Desktops Initiative for NASA (ODIN) Network and personal printers. Headquarters does not currently have an ODIN contract to support these areas. Instead HQ has outsourced to a performance based contract to cover many of the same items.
HQ consists of approximately 2030 desktop machines, 1550 PC's and 480 Macintosh computers. See Table H-1 for a list of all desktop hardware and software. HQ also supports 325 network printers that are described in Table H-1 (see below).

6.1.2 As is Condition

The HQ desktops have been refreshed repeatedly under the prior ODIN contract. The average age for a HQ PC is 2.5 years. The oldest desktop is 3.25 years and the newest is 11 months old. The software for the typical HQ desktop is contained in the Baseline Product Suite document and is intended to provide guidelines for desktop hardware and software systems as well as their supporting servers. The purpose is to provide guidance to ensure that the systems utilized throughout NASA Headquarters have the required functionality and exhibit interoperability features permitting exchange of information. The product suite is also compliant with Agency standard NASA-STD-2804G/2805G MINIMUM INTEROPERABILITY SOFTWARE SUITE and the MINIMUM HARDWARE CONFIGURATIONS standards. From a snapshot point of view the desktops are in good condition, however the technology ages very quickly and demands on-going purchases to remain in that condition. The printers are less than two years old since they were recently refreshed under the previous ODIN contract.

6.1.3 Systems Description and Operational Concept

The system consists of 1550 Windows machine, 480 Mac machine, 174 custom applications and 183 cots applications.

6.1.4 Production Network Diagram

The desktops are contained behind the on Private firewall which only allows only client side connections to be established to the outside Internet. This was done to prevent active scanning or hacking to be initiated from the Internet into the HQ private area. A diagram of where the desktop components are located in relation to the rest of Headquarters is shown in Figure 24.

Figure 24

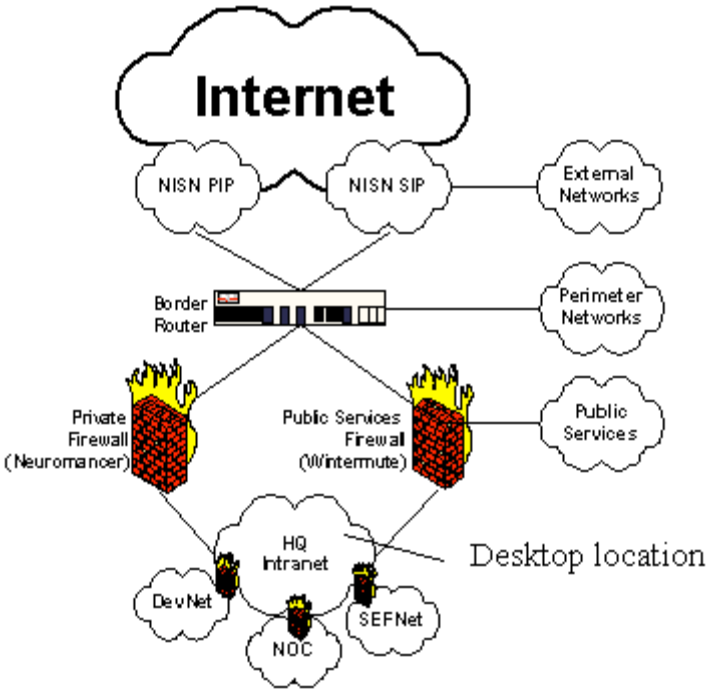

6.1.5 Systems and Support

As stated earlier, HQ consists of approximately 2030 desktop machines, 1550 PC's and 480 Macintosh computers. There are also 15 Sun desktops used by the technical community in the course of their work. There are a variety of systems that support the desktop/Laptop users; those systems are:

- The Help Desk
- Tier 2 support personnel
- NAV server
- Asset insight
- SMS software push server
- Control F-1 remote management software
- Avaya IP Office Automatic call distribution software (in support of the helpdesk)

6.1.6 Facilities

The backend client desktop facilities are located within the NASA HQ NHCC computer room. The numbers and type of servers are listed below.

Table 8

Host	Platform	Location
SMS software push server—This server is used to install software on the users desktops	(1) Windows NT 5 years old	HQ 300 E Street, Washington DC
Control F-1 remote management software	(1) Windows NT server new as of Mar 03.	HQ 300 E Street, Washington DC
Avaya IP Office Automatic call distribution software (in support of the helpdesk)	(1) Windows NT server 1.5 yrs old	HQ 300 E Street, Washington DC
Asset Insight—This server is used to take a software and hardware inventory the desktop	(1) Windows NT server 3.5 year old	HQ 300 E Street, Washington DC
NAV server	(1) Windows NT 2 years old	HQ 300 E Street, Washington DC

6.1.7 Technology Flashpoints

As stated earlier the Desktop component of NASA Headquarters has been refreshed on a regular basis from the ODIN contract. To maintain the general robustness of the Desktop components at NASA, will require continued refreshment through out the upcoming years.

6.1.8 Compliance

The NASA HQ desktop systems are compliant with the following:

Table 9

Specification	Compliant
NASA-STD-2810	Yes
Section 508	Yes
Headquarters standard server build doc(s)	Yes(for backend servers)
A-130 security	Yes
Desktop baseline document	Yes
NASA-STD-2804G/2805G	Yes

6.1.9 Capabilities

The NASA HQ Desktop Supports the following General category of applications:

- Office Automation (including email)
- Financial

- Internet
- Graphics Design
- Architectural design
- Mainframe terminal sessions
- PKI protected information sharing

6.1.10 To Be Condition

The plan for NASA headquarters is to remain compliant with Agency directives for 2804/2805 that call for going to Office XP for the Windows and Macintosh platforms according to the schedules below.

Table 10

Product	Completion Date
MS-Office XP	12/31/2003
Removal of MS-Office 2000	12/31/2003
Macintosh MS Office v. X	12/31/2003
Removal of Macintosh MS Office 2001	12/31/2003

Table 11: Desktop Hardware and Software			
WINDOWS COMPUTER SYSTEMS (approx 1,550)	**DATE FIRST INSTALLED AT HQ**	**OPERATING SYSTEM**	**CORELOAD SOFTWARE**
Current Desktops			
Dunn	April 2000	Windows 2000 SP2 or SP3	Acrobat Reader 5.0
Compaq EP	September 2000		Asset Insight 3.1
Compaq EN	December 2000 (majority of machines)		Eudora Pro 4.3.2
Compaq D500	May 2002		Informed Filler 2.7.1
Compaq D510	August 2002		Meeting Maker 7.0.1
			MS Photo Editor 3.0.1
			MS Office 2000
Current Laptops			Netscape Communicator 4.77
Compaq M300	April 2000		Internet Explorer 6.0 SP1, Q324929
Compaq E500	April 2000		Symantec AntiVirus 7.51.854
Compaq N400	September 2001		Notify Mail 1.2.1
Compaq N600	September 2001		QuickTime 5.0.2
Compaq N410	July 2002		Rumba 2000
Compaq N610	July 2002		SMS 1.2 SP4
			Vypress Auvis 2.1
			WinZip 8.1
			Authorware Player 6.5 F1
			Director Shockwave Player 8.5.1
			QuickTime Player 5.0.2
			RealPlayer 8 v6.0.9.584
MACINTOSH COMPUTER SYSTEMS (approx 480)	**DATE FIRST INSTALLED AT HQ**	**OPERATING SYSTEMS INSTALLED**	**CORELOAD SOFTWARE**
Current Desktops			
PowerMac G4 (Blue)	January 1999 (majority of machines)	OS 9.0.4 or OS 9.2.2	Acrobat Reader 5.05
PowerMac G4 Quicksilver	June 2001		Asset Insight 3.1
PowerMac G4 dual processor	January 2003		Better Telnet 2.0fc1
			Eudora Pro 4.3.3
			Fetch 3.0.3
Current Laptops			Informed Filler 2.7.1
Powerbook G3	October 1999		Internet Explorer 5.1.6
Powerbook G4 Titanium	June 2001		KeyAccess 5.0.2
			Meeting Maker 7.01
			MS Office 2001
			Netscape Communicator 4.77
			Notify Mail 3.11
			QuickTime 5.0.2
			SMS 1.2 SP4
			Stuffit Deluxe 5.5.1
			Symantec AntiVirus 7.02
			Authorware Player 6.5 F1
			Director Shockwave Player 8.5.1
			QuickTime Player 5.0.2
			RealPlayer 8 v6.0.9.584

Table 12

NETWORKED PRINTERS (approx 325)
HP 4si
HP 5si
HP 2100
HP 2200
HP 2500
HP 4100
HP 4200
HP 4550
HP 4600
HP 8000
HP 8150
Tektronix 360
Tektronix 560
Tektronix 740
Lexmark
Lanier

6.1.11 Application Services Component

This service description addresses the application services provided under the Headquarters ISEM support contract. The Application Services Component consist of Custom Applications development and ongoing sustainment covering a variety of functional capability to end users. Cradle to Grave services are provided including full life cycle development, design, implementation and sustainment. Presently this service supports 174 custom applications that are discussed below.

6.1.12 As is Condition

Applications at NASA Headquarters cross three architectural boundaries – mainframe, client/server, and web-based. These are maintained and enhanced periodically to meet policy and federal law changes as well as meeting new functional needs as defined by system owners/users. During the last contract year (6/1/02 – 6/1/03) 161 releases were delivered. There are 23 mainframe applications, most of which will either be rewritten into a web-based architecture or be replaced by IFMP by 2006. There are 57 Client/Server applications. These continue to be utilized and updated but the number continues to decrease because of touch labor and maintainability. No new Client/Server applications will be developed and in fact 7 were converted to web-based applications last year. As in the case of the mainframe applications, some Client/Server will be replace by the IFMP implementation as well. There are 94 Web-Based Applications. This number is expected to grow over the next several years as applications are converted, consolidated, and maintained. Obviously, the main driver behind this is new technological trends and retirement of Client/Server & Mainframe applications. New Web-based applications, mostly Agency wide, are identified and developed to improve and consolidate efficiencies in reporting and centralization of data.

All applications are kept up to date in terms of functionality. Occasionally, refreshes are performed for Server/Workstation/COTS upgrades and compatibility. The dependency here is the refresh cycle of the Servers in the NASA Headquarters NHCC.

6.1.13 Systems description and Operational Concept

The purpose of the NASA Headquarters Custom Applications is to increase productivity by automating otherwise manual functions. In recently years, applications have become much larger and centralized thus lending themselves to reused across, Headquarters, and the Agency. As this trend continues more and more functions can be consolidated and systems more integrated. Although custom applications utilized at NASA Headquarters covers a broad range of capabilities, functions supported include:

- Finance/Accounting/Budget
- Payroll and Personnel
- Property and Procurement
- General and Administrative covering:

- Incident Reporting
- Action Tracking
- Document Management
- Project Management/Financial Dashboard
- Program Status
- Resource Management
- Awards
- Information Disseminating applications
- Security
- Forms Dissemination
- Knowledge Sharing
- Law/Legal
- Satisfaction Surveys/Conference Registration
- Launch support

There are 174 applications that support the above functions.

6.1.14 Systems and Support

As stated earlier, Custom Applications span the Mainframe, Client/Server, and Web-based boundaries. For the Mainframe architectural component, applications are written in standard COBOL and in ADABASE Natural. These applications reside on the Marshall LPAR partition and are accessed via NASA Headquarters networks and workstations via emulation utilities.

NASA HQ Client/Server Custom Applications are written in a variety of languages including File Maker Pro, Visual Basic, MS Access, Visual Foxpro, C++, and Powerbuilder. These languages run on the client side and require a Windows 2000 and/or MAC Operating System to execute. This platform is discussed in detail in the Desktop Hardware & Software Component Section.

For the Web-based architectural component, applications are primarily written in the Cold Fusion developmental language and environment. This requires Cold Fusion and SUNONE Server software to execute. Crystal Enterprise was also added to facilitate the development of graphically rich reports. Recent new architectural initiatives are moving forward using XML/DSML Transport Layer requiring Oracle OC4J Java J2EE container with JDK and Cold Fusion MX. The web applications require a SUN Solaris or a MS NT OS to execute. The server and infrastructure environment is discussed in the Data Center Component section.

Oracle & MS SQL Server RDBMS mainly provide the storage and organization of data in support of our Client/Server and Web-based applications discussed above.

6.1.15 Facilities

NASA Headquarters Custom Applications are supported and reside in the HQ building located at 300 E Street SW, Washington D.C. The client/workstations are located with users throughout the building. The servers are located and maintained in the NHCC computer room. Mainframe applications, however, reside at Marshall Space Flight Center NAC located in Huntsville, Alabama.

6.1.16 Technology Flashpoints

As stated earlier, there is a dependency on Custom Applications as Servers and Workstations are refreshed. This has to be done on a routine/periodic basis such that the underlying architecture and infrastructure don't become end-of-life. This is required to maintain the general robustness of these applications and will require continued refreshment through out the upcoming years.

6.1.17 Compliance

The NASA HQ Custom Applications are compliant with the following:

TABLE 13

Specification	Compliant
NASA-STD-2810	Yes
Section 508	Yes, for 1.0 and X.0 applications
Software Management Guide (SMG)	Yes
ISEM SOW	Yes
Desktop baseline document	Yes
NASA-STD-2804G/2805G	Yes

6.1.18 Capabilities

The NASA Headquarters Custom Applications support a variety of functions as discussed in the Systems Description above. Applications are categorized into four major areas. They are listed discussed in somewhat more detail below.
The Finance/Accounting/Budget applications constitute the tools used by Headquarters to formulate and execute budgets and operating plans, and perform the total accounting for Headquarters and the Agency. These systems are important for daily accounting transactions but are also particularly important during end-of-month, end-of-quarter, and end-of-year processing. An example of an important application in this category is the Financial Accounting System, Teleprocessing (FAST), the NASA HQ accounting system, which provides for on-line update and retrieval of HQ accounting records and documents.

The Payroll and Personnel applications provide the automated capability to manage NASA's human resources. A primary tool is the local Headquarters module of the NASA Personnel/Payroll System (NPPS). There are a variety of other applications that support Headquarters and NASA wide human resources activities, including the Headquarters Resources

Tracking System (HRTS), which provide real-time status, submission, and tracking of SF-52, Form 1669, and FAST CASH Awards for the NASA offices as well as capture milestone date and produce metric report for Code CP.

The Property and the Procurement applications include a variety of important applications used to facilitate the NASA and Headquarters procurement and procurement analysis processes and to track NASA HQ assets. A key procurement application is the NASA Procurement Management System (NPMS), which provides the automated repository of information on NASA contracts, contractors, subcontractors and geographic distribution of funds associated with these contracts and subcontracts. Another important automated procurement system is the University Management Information System (UMIS), which provides the capability of tracking and maintaining the status of grants and contracts, awarded to colleges and universities to perform research and development work for NASA. The Maintenance Management System (MMS) tracks IT hardware assets at NASA HQ.

The General and Administrative applications constitute a broad category of automated systems, which provide support for a number of Headquarters business activities and general office administration. A key example is the Headquarters Action Tracking System (HATS), a software application used across Headquarters to track and archive action items and correspondence. The Headquarters Document Management System (HQDMS) is another example of a commonly used application with minor variations to meet the documentation organization, processing, storage, and retrieval needs of six different offices. The Legislative Affairs Database (LADS) tracks Congressional visits and provides reports on these visits. Also, web based surveys are used at Headquarters to collect information from employees. In addition, support is required to maintain pager lists used by Headquarters personnel.

To Be Condition

It is anticipated that the underlying Operating System infrastructure will be migrated to Windows XP and MAC OSX for the clients/workstations. For the server side, it is expected that the UNIX servers will be upgraded to the latest version of SUN Solarius and NT servers will be upgraded to Windows 2003 server. As a result, other architectural and infrastructural software will be upgraded such as Cold Fusion, Crystal Enterprise, SunOne Web server, J2EE container, etc. Custom Applications will subsequently be updated/refreshed and deployed in conjunction wit these projects/deployments.

6.1.19 Data Center Component

The NASA HQ Data Center (also know as the NHCC (NASA HQ Computer Center)) is located on the concourse level of the NASA HQ building at 300 E Street SW in Washington D.C. The data center houses the:

- NASA HQ server farm
- NASA HQ LAN and WAN
- NASA HQ NACC (NASA ADP Computer Center- HQ connection to the mainframe systems at MSFC)
- Hardware Maintenance Facility
- SEF (Systems Engineering Facility)

- Office space for the SOC (Server Operations Center), the NOC (Network Operations Center) and the NACC (data control)

6.1.20 As is Condition

The Data Center is approximately 12,250 square feet, sitting on a raised floor of 2ft x 2ft tiles, supported by a closed chilled water loop for the air conditioning and UPS (Uninterruptible Power System) for the continuance of operation during power company service interruptions. Badge card readers secure the three entrances into the data center area. Card reader access is granted by filling out and getting approved for the NHCC Access Request form. Temporary access can also be obtained through the Production Control Center by stating your mission, signing in and presenting your NASA picture badge. A listing of the equipment is contained in Table H-2 (see below).

6.1.21 Systems description and Operational Concept

The following is a sample of the equipment housed in the NASA HQ Data Center:

Network: Cisco (5000, 6500, 700), Sun e250 firewalls, Cisco VPN 3000, Sun Microsystems ACE servers, and Cisco AS5300 dial in servers.

Server Farm: Dell (2300, 6350, 4400, 6400), Compaq (5000, 5100/2, 4500r) , Unix (SGI, Enterprise (220r, 250, 450, 3000), Ultra (1, 2, 5, 10, 20), Sparc (10,20), Sun-Netra t1405 servers

Production Control: StorageTek 5000 printers, Xerox DP65 and 96 printers, Memorex 81/3266 tape units, IBM RS/600-990, Amdahl 4745 and Memorex 1374.

SEF: Dell, Compaq and Unix servers and 50 PC's

About 98% of the servers located in the HQ Data Center are in the 3-8 year old range. Some have reached end of life and others will soon be reaching end of life. Effort is currently being worked to assess the current server farm/network infrastructure and provide plan for upgrade, replacement, shutdown and/or consolidation.

6.1.22 Production Network Diagram

Figure 25 captures the components of the HQ Computer Network including the NHCC computer room, where all of the services are housed. Please refer to the file labeled EA_Overview_v1.ppt for a comprehensive description the Enterprise Architecture at headquarters.

Figure 25

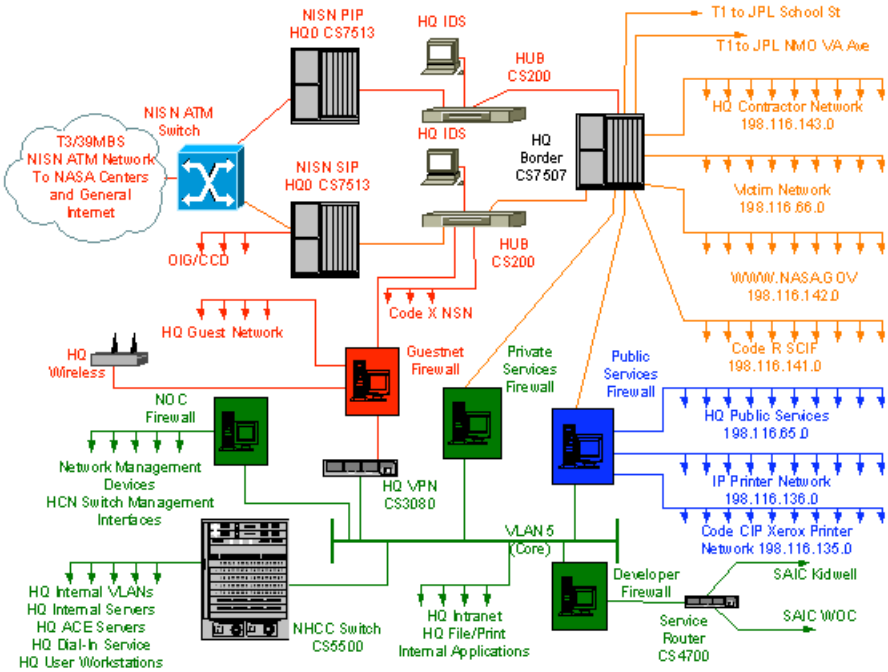

6.1.23 Systems and Support

NASA HQ Data Center has approximately 200 Windows NT, MAC and Sun servers. The support staff provide on-site coverage from 0600-1800 Monday through Friday (excluding holidays) and emergency coverage 24 hours x 7 days via an automatic monitoring/paging system that notifies the technical staff when an infrastructure system has gone down. Major sub components of the Data Center include:

NOC: Network Operations Center, monitoring network, install router/switches, manage firewall/firewall rule set, install sniffers/analyze sniffer data, dial-in service, network problem resolution.
SOC: Server Operations Center, monitor NT/Unix/MAC servers, problem resolution on servers, server build-out, installation of software update/patches/fixes, installation of new hardware, user account setup, server backup and restores, installation of application packages, email/web/data/file/application server support.

SEF: Systems Engineering Facility, testing of any/all new services (NT/WIN2000/Unix/MAC) before going into production at NASA HQ is done in the SEF. This includes applications, desk-tops, and servers.

6.1.24 Facilities

Please see Table 15 (see below) for a listing of servers and network equipment. All of the equipment is located at the NASA HQ building NHCC located at 300 E Street S.W. Washington DC.

6.1.25 Technology Flashpoints

>Old Equipment and technology
Most of the servers average 5 years in age. They are running old operating systems that will soon not be supported by the Vendor (Microsoft). A comprehensive technology refreshment is planned.
>Proliferation of servers
Proliferation of stove-pipe servers complicates support and compromises reliability and creates Multiple points of failure.
>Email service
The volume of email has gone up dramatically over the last several years. Additionally, users desire to keep their email on the server so that it can be accessed from any location. This has resulted in the excessive email delays during peak periods.

6.1.26 Compliance

The NASA Data Center is compliant with the following:

- Local fire and safety Codes
- Ramped access
- NASA-STD-2810
- A-130 Security
- Headquarters server build standards
- Section 508 where applicable

6.1.27 Capabilities

The NASA HQ Data Center provides a variety of services to the user community at NASA HQ such as:

Table 14

X500	File storage	Dial-in services
Web Servers	VPN (via SNA)	Radius
Database	Printing	FTP
Email	Calendaring	
DNS	Anti-Virus	

6.1.28 To Be Condition (Pending funding availability)

Upgrades to the email system, data/file server and dial-in servers are currently in planning or have been partially executed.
Other Plans are :

- Consolidate Servers
- Stabilize services for critical areas Email, dial-in, etc
- Implement Data Center "Best practices" by:
- Eliminating Single Points of Failure
- Utilize highly available back-end storage; NAS when possible for horizontal; SAN for vertical
- Load balance and replicate OR
- Use larger vertical servers and clustering when above not possible
- Implement enterprise level solutions for
- Backup/Restore/Disaster Recovery/ Monitoring/ Control
- Identify service consolidation targets to reduce server count

The UPS battery replacement and emergency generator installation project is planned for this fall. We plan to increase UPS system capability by adding an emergency generator. (The UPS system currently provides uninterrupted power to the NHCC, NISN gateway, Security system, Communications closets, 8th Fl. IG SCIF, Concourse IG SCIF, 6th Floor Code X and Code R SCIF, Health Unit, InfoCom workstations, HIT TVs).

6.1.29 Referenced Documents

NASA HQ facility planning is handle by NASA HQ code CO, they maintain and store the building facilities floor layouts for the NASA HQ building. (Lenore McGraw 202-358-1444)

TABLE 15

Device	DNS	Manf	Model	OS /Service
Mac Server	Travel 4D Server	Mac	Quadra 800	Manager 1.1.1:
Mac Server	PAODB2	APPLE	PowerMac 7100/80	Mac OS:
Mac Server		Mac		
Mac Server	Gopher	Apple	PowerMac 7100/80	MAC:
Mac Server	KeyServer1	Apple	PowerMac 7100/80	Mac OS:
Mac Server		Apple	PowerMac G4	
Mac Server		Apple	Power Mac G4	
Mac Server	Magnus	Apple	G4	FileMaker DBs:
Mac Server		PowerMac	G4	
Mac Server		PowerMac	7100/80	Public, Private Net Back-up PAODB1:
Mac Server		PowerMac	G3	
Mac Server	PAODB1	PowerMac	G4	FileMaker DBs:

Mac Server		PowerMac	7300/200	Shadow Server for Keyserver1:
Mac Server	Retrospect	Apple	PowerMac 7300/200	Mac OS:
Mac Server		Power Mac	G3	
NT Server	HQSMS2	Dell	PowerEdge 6400	NT:
NT Server	NS3	Compaq	Proliant	Solaris 2.6:
NT Server		Dell	PowerEdge 2300	MBONE NASA TV feed:
NT Server	HQEM2	Compaq	Proliant 4500R	HQ PC Meeting:
NT Server		Dell	Precision 410	
NT Server	HQMM1 (old)	Compaq	Proliant 4500R	Meeting Maker:
NT Server	HQERDPDC	Compaq	Proliant	
NT Server	OSSIM (old)	Dell		Code S Server:
NT Server		Compaq	Proliant	
NT Server		Dell	466/ME	Entry into Octel system:
NT Server		Compaq	Proliant	NT 4.0:
NT Server	HQGHOST2	Compaq	Proliant 5000	NT 4.0:
NT Server	HQEM2 (old)	Compaq	Proliant	Lotus Organizer:
NT Server	RA	Austin PC		NT 4.0:
NT Server	HQDBC1	Compaq	Proliant 4500R	NT 4.0:
NT Server	YSQL2	Compaq	Proliant	
NT Server	HQPS1	Compaq	Proliant	Enterprise Print Server:
NT Server	HQPS2	Compaq	Proliant 5000	Enterprise Print Servers:
NT Server	PKI	Austin PC	P133	NT 4.0:
NT Server		Compaq	Proliant	
NT Server	HQMML	Compaq	Proliant	Test Box on the SEF net:
NT Server	HQX500	Compaq	Proliant	X.500 Back Store:
NT Server	HQPDC1	Compaq	Proliant	Enterprise Domain Controller:
NT Server	HQDB1	Compaq	Proliant	NT 4.0:
NT Server	TLCWEB	Dell	PowerEdge 4400	NT 4.0:
NT Server	HQSHOP4NASA-WEB	Compaq	Proliant 2500	ODIN Catalog:
NT Server	HQSHOP4NASA-DB	Dell	PowerEdge 1300	ODIN Catalog:
NT Server	HQHCAT	Dell	PowerEdge 1650	
NT Server	Egress	Dell	PowerEdge 1650	
NT Server	Caspian	Dell	PowerEdge 6400	
NT Server	HQPS5	Dell	PowerEdge 4400	Enterprise SMS Server:
NT Server		Apex	Outlook	
NT Server	Scarecrow2	Generic PC	No Model	NT 4.0:
NT Server	TLCAPP	Dell	PowerEdge 4400	NT 4.0:
NT Server	HQPS3			Enterprise Print Server:
NT Server	TLCDB	Dell	PowerEdge 4400	NT 4.0:
NT Server	HQDATA1	Dell	PowerEdge 6350	
NT Server	OATI	Dell	PowerEdge 6300	NT 4.0:

NT Server	RealEncoder	Compaq	Deskpro	Video encoder for RealSever:
NT Server		Compaq	Deskpro	
NT Server		Compaq	Proliant 1600	
NT Server	Facility	Dell	PowerEdge 2300	NT 4.0:
NT Server	HQFAXSR	Dell	Poweredge 1300	HQ FAX Server:
NT Server	HQDB1New	Dell	PowerEdge 4400	SQL DB Server:
NT Server	HQCAD	Dell	PowerEdge 4400	NT:
NT Server	GRIN	Dell	Dimension XPS T600	NIX web/WAIS Server Image DB:
NT Server	Spacekids	Dell	PowerEdge 6600	NT 4.0 with SP6A with Q246045 :
NT Server	OSSIM	Dell	PowerEdge 6600	NT 4.0 with SP6A with Q246045 :
NT Server		Dell	2U Rade	
NT Server	HQDATA4	Dell	PowerEdge 6400	
NT Server	Mars98	Dell	Optiplex GX pro	Code S SpaceKids box:
NT Server	Tethys	Dell	PowerEdge 4400	NT 4.0:
NT Server	RealServer	Dell	PowerEdge 2300	Real Server:
NT Server	Aral	Dell	PowerEdge 2500	NT 4.0:
NT Server	HQSMS1	Dell	PowerEdge 6300	NT 4.0:
NT Server	Transformer	Compaq	Deskpro	
NT Server	Sirius	Dynamic Decisions	P2E-L97X5711	NT 4.0:
NT Server	HQ1509000	Dell	PowerEdge 4200	HQ ISO Server:
NT Server	Orion	Dell	PowerEdge 6600	NT 4.0 with SP6a with Q246045 :
NT Server	Transformer2	Compaq	Deskpro EN	
NT Server	HQCDTOWER1	Procomm	Procomm Server	NT 4.0:
Printer		Fujitsu	DX2300	
Router		Cisco	Cisco 7000	CS7507 Router:
Router		Verilink		
Router	CS7507 Border Router		Cisco 7000	CS7507 Router:
Router		Cisco	Cisco 2600	
Router		Cisco	Cisco 7200 VXR	
Router		Cisco	Cisco 4700	CS 4700 Router:
Router	RSM-1.hcn	Cisco	Cat 5500	
Router		Motorola	Codex 2121	
Router		IBM	IBM 5866-2	
Router		Verilink		Connect T1 Modem:
Router		Verilink		Connect T1:
Server			UNKNOWN	
Server		Magitronic	486DX-VL	
Server				Image Library:
Server	MRTG	Generic PC		Mrtg Server:
Server	PRGATE1	Dell	PowerEdge 1650	Red Hat Linux V8.0:

Server		Dynex	386	ODIN Delivery Order:
Server	HQGHOST1	Generic PC		NT 4.0:
Server		IBM	PowerServer 530H	Badging:
Server		Elegance	433i	
Server	Heffer	Sun	Ultra 5	
Server	HQPS4	Dell	PowerEdge	
Server		Digital	BA350	
Server		Compaq	Proliant	
Server				
Server		Dell	PowerEdge 2450	
Server	HQPDC1	Dell	PowerEdge 6400	Enterprise Domain Controller:
Server	HQMM1	Dell	PowerEdge 6400	Meeting Maker:
Server		Datacomp	DCC 486133	Badging:
Server		Dynex	386	Badging:
Server		XYPLEX	MaxServer 1600	
Server	Max2	Ascend	Max 4004	Dial In:
Server		Cobradev	IBM RS/6000-550	Cobra/Unify Application:
Server		Crobra	1BM RS/6000-550	Cobra/Unify Application:
Server				Document Management System:
Server		Sun	Disk multipak	
Server		SGI	Indigo 2	Code Y Server:
Server				Enterprise Data Storage:
Server		Dell	PwerEdge 6600	
Server		SGI	Indigo 2	Web Server:
Server		NS2	Sun Sparc 5	DNS Server Private Net:
Server	HQCSR1	Generic PC		
Server		Dell	PV 35F	
Server		Cisco	Cisco VPN 3000 Concentrator	CS3080 Wireless VPN:
Server	HQDATA3	Dell	PowerEdge 6350	Enterprise Data Storage:
Server	Aero	SGI	Indigo 2	Irix:
Server		TeleNet		Tele Net- Black box:
Server		AT&T		
Server	Max1	Ascend	Max 4004	Dial In:
Server	Kaos		Sun Sparc 20	Oracle DB Server:
Server		ProcomTech	E4	
Server				
Server		Cisco	AS 5350	
Server	AIMHQ02	IBM	Power Server 990	CATS-2, AutoPR (Production):
Switch		Cisco	Cisco 3550	
Switch		Cisco	Cat 5000	

Switch		Dell	PowerVault 50F	
Switch		Cisco	Fast Hub 200	
Switch			Commander	
Switch		Dell	PV50F	
Switch		Cisco	Fast Hub 200	
Switch		Neoteris	Access 3000	
Switch				CS5000 Network switch:
Switch		Sun	Netra 1405	
Switch		Octel	250	Telephone:
Tape Drive		Dell	PowerVault 120T	
Tape Drive		Sun	DDS4	
Tape Unit		Sun	8MM XL	
Tape Unit		Sun	8MM Exabyte	
Tape Unit		Sun	Disk Multipak	
Tape Unit		Quantium	DLT TH4EA-XF	
Tape Unit		Sun	8mm XL	
Tape Unit		Unknown	Quantum DLT 4700	
Tape Unit		Compaq	DLT 15/30	
Tape Unit		Compaq	10/20 DLT	
Tape Unit		Sun	8mm XL	
Tape Unit		Sun	8MM Exabyte	
Tape Unit		Compaq	15/30 DLT	
Tape Unit		Compaq	10/20 DLT	
Tape Unit		Compaq	10/20 DLT	
Tape Unit		Compaq	10/20 DLT	
Tape Unit		Compaq	15/30 DLT	
Tape Unit		Sun	8mm XL	
Tape Unit		Sun	8mm XL	
Tape Unit		Quantium	DLT	
Tape Unit		Compaq	15/30 DLT	
Tape Unit		Compaq	10/20 DLT	
Tape Unit		HP	SureStore DLT 70	
Tape Unit		Sun	8mm	
Tape Unit		Compaq	DLT 10/20	
Tape Unit		Sun	8MM XL	
Tape Unit		Compaq	DLT	
Tape Unit		Sun	8mm XL	
Tape Unit		Dell	PowerVault 110T	
Tape Unit		Sun	8mm	
Tape Unit		Compaq	DLT	
Tape Unit		Sun	Sun 8mm	
Tape Unit		Compaq	15/30 GB DLT	
Tape Unit		SGI	4MM	
Tape Unit	HQDATA2	Breece Hill	Q 2.15	
Tape Unit	HQDATA1	Breece Hill	Q 2.15	
Tape Unit			Quantum TH5FA	

Tape Unit	TH4E-YF	Quantum	DLT	
Tape Unit	TH4EA-XF	Quantum	DLT	
Tape Unit		Sun	StorEdge L8	
Tape Unit		Compaq	15/30 DLT	
Tape Unit		Sun	DLT	
Tape Unit		Sun	8mm	
Tape Unit		Compaq	10/20 DLT	
Tape Unit		Compaq	DLT	
Tape Unit		Sun	8MM	
Tape Unit		Sun	StorEdge L9 (ALT 8000)	
Tape Unit		Dell	PowerVault 122T	
Tape Unit			StorEdge L9	
Tape Unit		Dell	PowerVault 10T DLT VS 80e	
Tape Unit		Dell	PV 130T	
Tape Unit		Sun	DDS 4	
Tape Unit		Sun	8mm	
Tape Unit		Sun	DDS 4	
Tape Unit		Sun	DDS 4	
Tape Unit		Sun	DDS 4	
Tape Unit		Sun	StorEdge L9DLT 8000	
Tape Unit		Sun	8mm	
Tape Unit		Sun	DDS4 4MM	
Tape Unit		Sun	DDS 4	
Tape Unit		Sun	DDS 4	
Tape Unit		Sun	DDS 4	
Tape Unit		Dell	PowerVault 110T	
Tape Unit		Sun	8MM XL	
Tape Unit		Sun	DSS 4	
Tape Unit			EXABYTE EXB-220	
Tape Unit		Sun	4MM	
Tape Unit		SGI	4MM	
Tape Unit		Sun	8mm XL	
Tape Unit		Sun	8mm	
Unix Server	Arcturus	Sun	Enterprise 220R	Web Application Server Netscape, CF:
Unix Server		Sun	Sunfire V880	
Unix Server	ERASMUS.hq.nasa.gov	Sun	SunFire V480	Solaris 8.0:
Unix Server	Blacktower	Sun	Sunfire V120	Solaris
Unix Server	Elan	Sun	SparcServer 10	Solaris:
Unix Server	Berlin	Sun	Enterprise 3000	Solaris 2.6:
Unix Server	Foundation	Sun	Ultra 2	Solaris 2.6:
Unix Server	Report1	Sun	Ultra 10	Solaris 8:
Unix Server	Venus	Sun	Sparc Server 20	Solaris 2.5.1:

Unix Server	Nasal3	Sun	Ultra 5	Solaris:
Unix Server	Polaris	Sun	Ultra Enterprise 250	
Unix Server	Diana	Sun	Ultra Enterprise 1	Solaris 7:
Unix Server	Bolg	Sun	Ultra Enterprise 3000	Solaris 7:
Unix Server	lists.hq.nasa.gov	Sun	Ultra 2	Solaris 7:
Unix Server	GuesNet	Sun	Ultra 10	Solaris:
Unix Server	Norad	Compaq	Proliant ML330	
Unix Server	Kenny	Sun	Sparc 20	FTP:
Unix Server	Wintermute	Sun	Enterprise 250	Solaris 8:
Unix Server	Neuromancer	Sun	Enterprise 250	Solaris:
Unix Server	Galaxy	Sun	SparcServer 20	Code S Development Server:
Unix Server	Milan	Sun	Ultra Enterprise 150	Solaris 2.6:
Unix Server	Marge	Sun	Enterprise 220R	Solaris 7:
Unix Server	Dodgecity	Sun	SparcServer 20	IMAP test:
Unix Server	Cheyenne	Compaq	Proliant ML330	
Unix Server	Watchtower	Sun	Sunfire V120	Solaris 9:
Unix Server	NS1	Sun	Sun Sparc 5	Solaris 7:
Unix Server	?????	Sun	Sunfire V480	
Unix Server	Whale	INDY	R5000	Irix:
Unix Server	Chacha	Sun	Enterprise 220R	
Unix Server	Leopard	Sun	Enterprise 220R	Irix 6.2:
Unix Server	TwinTower	Sun	Sunfire V120	
Unix Server	Azog	Sun	Ultra Enterprise 250	Sendmail 8.9.3:
Unix Server	Homer	Sun	Enterprise 220R	Solaris:
Unix Server	Lumberjack	Compaq	Proliant	Loghost:
Unix Server	Nasal4	Sun	Ultra 5	Solaris:
Unix Server	Spunky	Sun	Ultra 5	
Unix Server	Octagon	Sun	Ultra Enterprise	Octagon:
Unix Server	DevGate	Sun	Ultra 10	Solaris:
Unix Server	Scuzzlebutt	Sun	Ultra 2	Solaris 2.6:
Unix Server	Cheesypoof	Sun	Enterprise 3000	Solaris 2.6:
Unix Server	Extranet	Sun	Netra	Solaris 2.6:
Unix Server	Hyde	Sun	Sparc 10	Admin for Email List:
Unix Server	Po	Sun	Ultra Enterprise 150	Solaris 2.6:
Unix Server	Zurich	Sun	Sparc 20	Solaris 2.6:
Unix Server	Epsiten2	Dell	Dimension XPS T600	
Unix Server	Demilo	Sun	Ultra 2	Solaris 2.6:
Unix Server	Kittyhawk	Sun	Ultra Enterprise 250	Web/App Server CF:
Unix Server	Morgan	Sun	Ultra Enterprise 1	Solaris 2.5.1:
Unix Server	Merlin	Sun	Ultra Enterprise 1	Solaris 2.5:

UPS		Sentury R-2000
UPS	Compaq	
UPS	Compaq	
CD-ROM	Apple	
CD-ROM		HyperCD 53X
CD-ROM		HyperCD 53X
CD-ROM	Sun	
CD-ROM		
CD-ROM		
CD-ROM	Sun	
Disk	Sun	Netra ST A1000
Disk	Compaq	10/20 DLT
Disk	Legasys	Disk pak
Disk	Sun	StorEdge A1000
Disk	Dell	PowerVault 630F
Disk	Dell	PV 630F
Disk	Sun	StorEdge A1000
Disk	Andataco	
Disk	Artecon	
Disk	Sun	Disk multipak
Disk	Dell	PV 650F
Disk	Dell	PV 630F
Disk	Dell	PV 630F
Disk	Legasys	Disk pak
Disk	Sun	Disk multipak
Disk Array Unit	Sun	Multipak
Disk Array Unit	BoxHill	
Disk Array Unit		
Disk Array Unit		
Disk Array Unit		
Disk Array Unit	Sun	StorEdge A1000
Disk Array Unit	Clariion	
Disk Array Unit	Sun	Sparc Stroage Array 1010
Disk Array Unit		Disk tray
Disk Array Unit		Disk tray

Disk Array Unit	Clariion	
Disk Array Unit		
Disk Array Unit	Sun	StorEdge A1000
Disk Array Unit	Artecon	
Disk Array Unit	Sun	Disk Multipak
Disk Array Unit	Dell	
Disk Array Unit	Sun	Disk Multipak
Disk Array Unit	Sun	Sparc Storage Array 1010
Disk Array Unit	Sun	Storedge A1000
Disk Array Unit	Sun	StorEdge A1000
Disk Array Unit		Disk Multipak (6)
Disk Array Unit		
Disk Array Unit	Sun	StorEdge A1000

6.2 Communications Segment

6.3 Wide Area Network (WAN) Component

The HQ Wide Area Networking Component consists of: routers, switches, intrusion detection systems, firewalls, remote access devices, and point-to-point circuits that are both NASA-owned and outsourced. HQ does not currently have an ODIN contract to support these areas. HQ has outsourced to a new performance-based contract to cover many of the same items.

The Wide Area Networking Component includes multiple routers, switches, carrier set unit/data set units (CSU/DSUs), firewalls, remote access solutions, network management, and dedicated intrusion detection platforms that enable HQ connections to the NASA Integrated Service Network (NISN) Standard and Premium Internet (e.g. SIP and PIP). HQ is also a node on the NASA Integrated Systems Services Utility (NISSU). Refer to the Desktop Hardware and Software Component for a list of additional HQ systems, applications, and services used to provide general support for the Wide Area Networking Component.

6.4 As is Condition

The Wide Area Networking Component has not been substantially refreshed under the prior ODIN or earlier performance-based contracts. The average age for components supporting wide area networking at HQ is 4 years. The oldest component is over 6 years old. The most recent additions to the Wide Area Networking component include a switch deployed in support of the initial ODIN delivery order in 2000, several CSU/DSUs replaced in 2002, and a web-based secure remote access solution deployed in 2003. From a snapshot point of view the majority wide area networking components are generally in good condition, but several key components are rapidly approaching their expected product end-of-life.

6.4.1 Systems Description and Operational Concept

The Wide Area Networking Component is located in the HQ Building and contractor facilities at 400 Virginia Avenue, and also incorporates an integrated network operations center (NOC) that provides performance, utilization, access, change, and problem management support for critical Headquarters and contractor devices and systems. These devices include: routers, switches, firewalls, remote access servers, monitoring equipment and authentication mechanisms. In addition to general Internet services, other services monitored or supported include external network connections to local contractor sites. The objectives of the Wide Area Networking Component are to:

- maintain and assure the continuity of service to HQ customers and services;
- assure protection from malicious attacks;
- report anomalous wide-area network behaviors;
- coordinate analysis to resolve either technical or security issues related to the networked services, including all network-based systems within the assigned logical boundaries of HQ; and
- monitor for attempted unauthorized penetration (hacker attempts) into HQ systems.

The Wide Area Networking Component also provides the single point-of-contact for resolving operations problems outside of the network responsibilities of HQ. It also serves as an information source for utilization of network resources and supports both HQ and the Agency at large during the planning stages of network implementation as to network capacity, and performance monitoring.

6.4.2 Production Network Diagram

The Wide Area Networking Component includes the interface to the NISN SIP, NISN PIP, perimeter contractor networks, the public and private network firewalls, and public HQ services (e.g. web, electronic mail, etc). Network management devices are located in the HQ Network Operations Center (NOC). A diagram of these components in relation to the rest of Headquarters is shown in Figure 1 above.

6.4.3 Systems and Support

As stated earlier, the Wide Area Networking Component consists of multiple routers, switches, carrier set unit/data set units (CSU/DSUs), firewalls, remote access, and dedicated intrusion detection platforms that enable HQ connections to the NASA Integrated Service Network (NISN) Standard and Premium Internet (e.g. SIP and PIP). There are a variety of support systems for this Component; those systems include:

- The Help Desk
- Tier 2 & 3 support personnel
- HP Openview
- CiscoWorks 2000
- Remedy Action Request System

HQ is also a node on the NASA Integrated Systems Services Utility (NISSU), a pilot high-speed network. The NISSU configuration includes a Cisco 6509, 3550, and two 3548 switches to support the Agency CIO office and HQ training facility. NISSU components are managed from MSFC.

6.4.4 Facilities

The majority of Wide Area Networking components are located within the NASA HQ NHCC computer room. The function, type, number, and location of devices are listed below.

Table 16

Function	Platform	Location
Border Router – the perimeter gateway device for the entire logical HQ network	(1) Cisco 7507 and (1) hot backup 6 years old	HQ 300 E Street, Washington DC
Firewall – dedicated devices to protect separate segments of the HQ network	(2) Sun E250 servers and (1) Sun Ultra 1 with Checkpoint FW-1 3 yrs old	HQ 300 E Street, Washington DC
Border Switch – dedicated Layer 2 device to support connections between the outside wide area network and the internal HQ network	(1) Cisco CAT 5000 3 yrs old	HQ 300 E Street, Washington DC
Intrusion Detection Platforms – Agency standard devices on NISN SIP and PIP	(2) ISS RealSecure on Solaris 9 & Win2K 2 yrs old	HQ 300 E Street, Washington DC
CSU/DSU – for dedicated circuits to local contractor offices	(4) Verilink CSUs 2 yrs old	HQ 300 E Street, and contractor offices, Washington DC
Secure Remote Access – strongly authenticated web-based solution for accessing internal HQ resources	(1) Neoteris 3080 1 yr old	HQ 300 E Street, Washington DC

Network Management – devices to maintain component up/down status and configuration	(1) Sun Ultra 1 and (1) Sun Ultra 10 running HP Openview and CiscoWorks 2000	HQ 300 E Street, Washington DC
NASA Integrated Systems Services Utility (NISSU)	Agency standard configuration	HQ 300 E Street, Washington DC

6.4.5 Technology Flashpoints

As stated earlier, the Wide Area Networking Component has not refreshed under the prior ODIN or other performance-based contracts. The average age for components supporting wide area networking at HQ is 4 years. The oldest component is over 6 years old. To maintain the general robustness of this component at HQ, substantial upgrades and refreshment through out the upcoming years is required.

6.4.6 Compliance

The Wide Area Networking Component is compliant with the following:

Table 17

Specification	Compliant
NASA-STD-2813	Yes
NPG 2810.1	Yes
Section 508	N/A
A-130 security	Yes
Draft NASA-STD LAN Architecture	Yes

6.4.7 Capabilities

The Wide Area Network Component provides a protective layer of border routers, firewalls and intrusion detection systems that supports nearly all the Internet needs of the internal systems. From a service perspective, the following services are dependent upon the wide area interface.

Table 18

X500	File storage	Dial-in services
Web Servers	VPN (via SNA)	Radius
Database	Printing	FTP
Email	Calendaring	
DNS	Anti-Virus	

6.4.8 To Be Condition

HQ intends to remain compliant with Agency directives for local and wide area networking. Upgrade and refreshment activities are forecast (contingent on funding availability) according to the schedules below. Other less critical activities (not shown here) are also anticipated.

TABLE 19

Product	*6.4.8.1 Completion Date*
Upgrade Checkpoint FW-1	12/31/2003
Upgrade Border Switch	12/31/2003
Replace remaining 10Mb switch interfaces with 100Mb interfaces	12/31/2003
Upgrade network management services	12/31/2003
Replace Border router and backup	12/31/2004
Replace Border switch	12/31/2004

See below for a listing of standard hardware and software:

Table 20

Wide Area Networking Component				
Device	**DNS/Device Name**	**Manf**	**Model**	**OS /Service**
Router	Backup Border Router	Cisco	7000	CS 7507 IOS
Router	Border Router	Cisco	7000	CS 7507 IOS
Router	NISSU	Cisco	2600	CS 2600 IOS
Router	NISSU	Cisco	7200 VXR	CS 7200 IOS
Router	Contractor Networks	Cisco	4700	CS 4700 IOS
Router	CSU/DSU	Verilink		T1
Router	CSU/DSU	Verilink		T1
Router	CSU/DSU	Verilink		T1
Router	CSU/DSU	Verilink		T1
Switch	NISSU	Cisco	6509	CS 6509 Switch
Switch	Border Switch	Cisco	5000	CS 5000 Switch
Switch	NISSU	Cisco	3548	CS 3548 Switch
Switch	NISSU	Cisco	3548	CS 3548 Switch
Hub	SIP	Cisco	Fast Hub 200	
Hub	PIP	Cisco	Fast Hub 200	
Unix Server	Remote Access	Neoteris	Access 3000	
Unix Server	Network Management	Generic PC		Mrtg Server
Unix Server	Network Management	Sun	Ultra 1	Solaris 2.6 HP Openview
Unix Server	Network Management	Sun	Ultra 10	Solaris 8 Ciscoworks 2000
Unix Server	Intrusion Detection	Sun	Ultra 5	Solaris 8

				ISS RealSecure
Unix Server	Intrusion Detection	Sun	Ultra 5	Solaris 8 ISS RealSecure
Unix Server	Octagon (firewall)	Sun	Ultra 1	Solaris 2.6 Checkpoint FW-1
Unix Server	Wintermute (firewall)	Sun	Enterprise 250	Solaris 2.6 Checkpoint FW-1
Unix Server	Neuromancer (firewall)	Sun	Enterprise 250	Solaris 2.6 Checkpoint FW-1

6.4.9 Local Area Network Component

The HQ Local Area Networking Component consists of NASA-owned routers, switches, remote access, wireless, domain naming, and X500/directory/authentication services. HQ does not currently have an ODIN contract to support these areas. HQ has outsourced to a new performance-based contract to cover many of the same items.

The Local Area Networking Component includes routers, switches, remote access solutions, and network management platforms that serve to connect HQ users to the Wide Area Networking Component. Contractor-managed firewalls separate contractor networks and the public from the HQ private network. HQ is also a node on the NASA Infrastructure Systems Services Utility (NISSU). Refer to the Desktop Hardware and Software Component for a list of additional HQ systems, applications, and services used to provide general support for the Local Area Networking Component.

6.4.10 As is Condition

The Local Area Networking Component has not been substantially refreshed under the prior ODIN or earlier performance-based contracts. The average age for components supporting local area networking at HQ is 4 years. The oldest component is over 7 years old. The most recent additions to the Local Area Networking component are the wireless networking services (deployed in 2002) and a cross-realm ACE/SecurID authentication service (deployed in 2003). From a snapshot point of view the majority wide area networking components are generally in good condition, but several key components are rapidly approaching their expected product end-of-life.

6.4.11 Systems description and Operational Concept

The Local Area Networking Component is located in the HQ Building at 300 E Street, Washington DC. It includes an integrated network operations center (NOC) that provides performance, utilization, access, change, and problem management support for critical HQ and contractor devices and systems. These devices include: routers, switches, firewalls, remote access servers, monitoring equipment and authentication mechanisms. In addition to general

Internet services, other services monitored or supported include external network connections to local contractor sites. The objectives of the Local Area Networking Component are to:

- maintain and assure the continuity of wired and wireless services to HQ customers;
- provide a reliable and accurate domain host naming, directory, and strong authentication services for the HQ environment;
- ensure availability of deployed dial-in remote access services; and
- interface seamlessly with the network management services deployed for the Wide Area Networking Component.

The Local Area Networking Component relies on the Wide Area Networking Component to resolve operations problems outside of the logical HQ network space. The Wide Area Networking Component also serves as an information source for utilization of local network resources and supports HQ during the planning stages of network implementation as to network capacity, and performance monitoring.

6.4.12 Production Network Diagram

The Local Area Networking Component (referred to as the "HQ Intranet") resides behind the HQ private network firewall and is co-located with the HQ Public Services network (e.g. web, electronic mail, etc). Unless specified otherwise, all services supporting the Local Area Networking Component (domain naming service, X500 directory services, wireless services, and authentication services) reside on the HQ Intranet. Network management devices are located in the HQ Network Operations Center (NOC), which is also behind the private network firewall. Contractor networks (e.g. DevNet) and evaluation networks (e.g. SEFNet) are separated from the HQ Intranet by appropriately configured firewalls. A diagram of these components in relation to the rest of Headquarters is shown in Figure 1 above.

<u>Domain Naming Service (DNS) Configuration</u>

Three UNIX systems provide primary domain naming services for the HQ Local Area Networking Component. Two of these systems reside on the HQ Intranet, and exclusively serve the HQ user community and other internal servers. A third system resides on the Public Services network, and is accessible by the general Internet. A remote secondary server resides at Ames Research Center (ARC), and is also authoritative for the HQ Domain. This server is expected to be re-hosted at Marshall Space Flight Center (MSFC) by the end of the current fiscal year.

<u>X500 Directory Services</u>

A single UNIX system provides directory services for the HQ Local Area Networking Component. This system is configured to interoperate with comparable devices located at each NASA Center, and like the DNS server described above, resides on the Public Services Network. A separate Windows NT server provides a "back store" capability for X500 directory services. This device resides on the HQ Intranet.

<u>Network Management Services</u>

The HQ Wide Area Networking Component provides network management services for the Local Area Networking Component.

HQ Local Area Network Switch Architecture

The HQ Local Area Network is comprised of multiple Cisco 5000 and 5500 switches distributed throughout the communications closets placed on each floor of the HQ Building in Washington DC (note that NASA presently does not occupy the second floor of this building). Each switch is provisioned with at least two optical fiber "trunks" to ensure a continuously available redundant path throughout the HQ network. All trunks terminate in the NASA HQ Computer Center (NHCC; located in the basement of the HQ Building) adjacent to the NASA Integrated Services Network (NISN) gateway to the general Internet. The HQ switch and trunk architecture is shown in Figure 26 below.

Figure 26

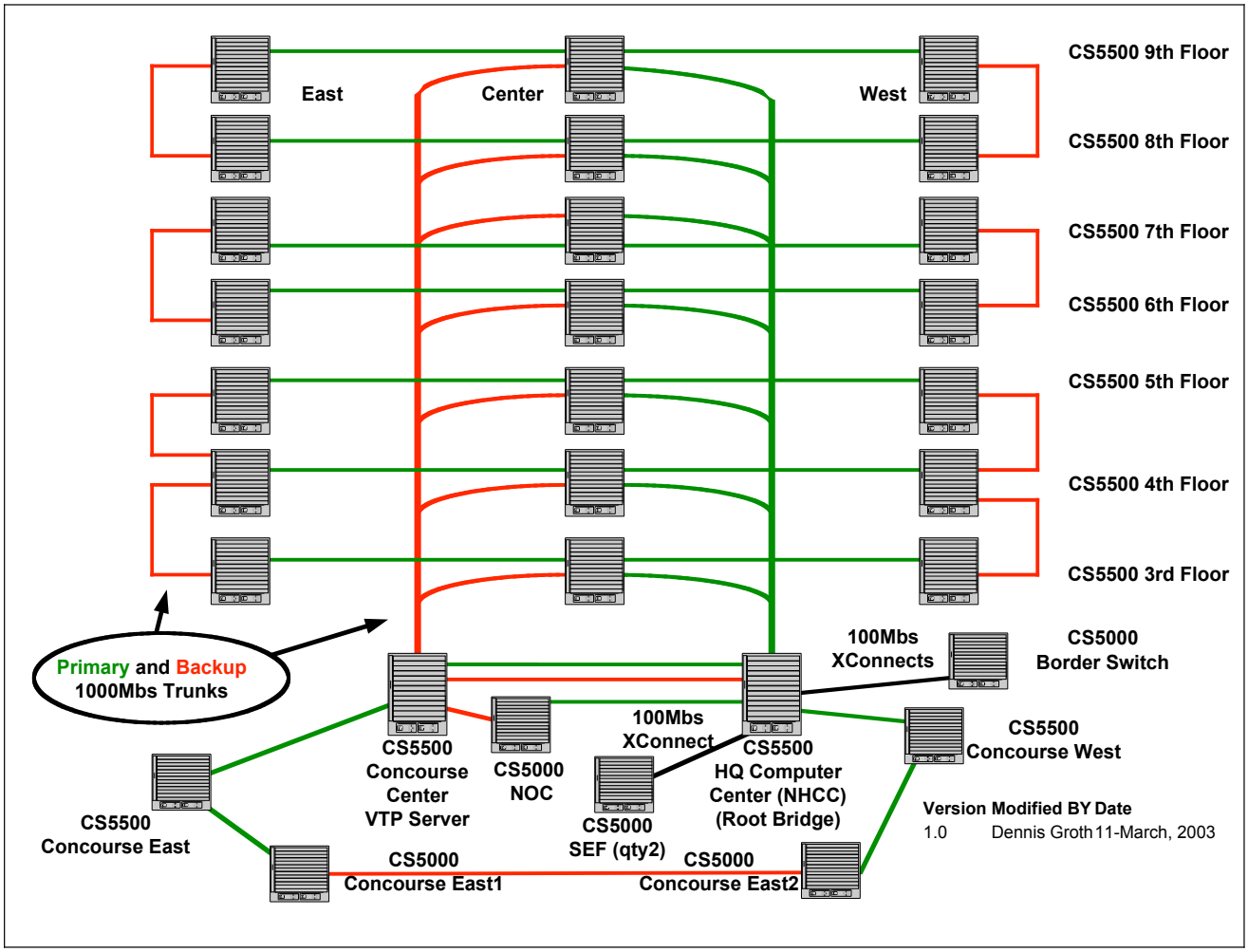

6.4.13 HQ Wireless Network

The HQ wireless network consists of Cisco Aironet 350 Series Access points mounted in the ceiling on the 3rd, 5th, and 6th floors of the HQ Building. All access points are logically grouped on a single subnetwork within the Local Area Networking Component. Wireless clients are assigned non-routable IP addresses by a dynamic host configuration protocol (DHCP) server, and access either the HQ Intranet or the Internet through a designated firewall. Traffic to the HQ Intranet strongly authenticated using ACE/SecurID tokens and is permitted by a Cisco Virtual Private Network (VPN) Model 3080.

6.4.14 Systems and Support

As stated earlier, The Local Area Networking Component includes routers, switches, remote access solutions, and network management platforms that serve both HQ users and the needs of the Wide Area Networking Component. As shown in Figure 24, contractor-managed firewalls separate contractor networks from the HQ private network. There are a variety of other support systems for this Component; those systems include:

- The Help Desk
- Tier 2 & 3 support personnel
- Remedy Action Request System
- NASA PKI
- HQ Dial-in Service
- ACE/SecurID authentication service

The HQ dial-in service has been recently upgraded to (2) Cisco AS5300 series remote access servers. These systems are intended to replace the original HQ dial-in servers purchased in 1997. All users with a HQ-issued ACE/SecurID token may access this service. The migration to the new AS5300 servers is planned for completion by the end of the current fiscal year.

The HQ ACE/SecurID authentication service has been recently upgraded to ACE Server version 5.1. Three new servers have been deployed in parallel with the existing ACE/SecurID authentication service. The migration to the new ACE servers is planned for completion by the end of the current fiscal year.

6.4.15 Facilities

The Local Area Networking components discussed in this document are located within the NASA HQ building, its concourse level (e.g. basement), and the NHCC computer room. The function, type, number, and location of active devices are listed below (components and services being currently upgraded are not listed):

TABLE 21

Function/Device	Platform	Location
Network Switches	(2) Cisco 2900s, (11) Cisco 5000s, (19) Cisco 5500s	Throughout HQ Building
Routers	(1) Cisco 5500 Route Switch Module	NHCC
Wireless LAN	(16) Cisco Aironet 350 Series Access Points	3rd, 5th, and 6th floors of HQ Building
Remote Access	(2) Ascend Max 4004s	NHCC
Domain Naming Services	(2) Sun Sparc 5s & (1) Compaq Proliant	NHCC
Network Management	(1) Sun Ultra 1 & (1) Sun Ultra 10	NHCC
X500 Directory Services	(1) Sun Ultra 1 & (1) Compaq Proliant	NHCC
Authentication Services	(2) Sun Ultra 1s	NHCC

6.4.16 Technology Flashpoints

As stated earlier, the Local Area Networking Component was not extensively refreshed under the prior ODIN or other performance-based contracts. The average age for components supporting local area networking at HQ is 4 years. The oldest component is over 7 years old. To maintain the remaining robustness of this component at HQ, substantial upgrades and refreshment through out the upcoming years is planned pending funding availability.

6.4.17 Compliance

The Local Area Networking Component is compliant with the following:

TABLE 22

Specification	Compliant
NPG 2810.1	Yes
Section 508	Yes
A-130 security	Yes
Draft NASA-STD LAN Architecture	Yes

6.4.18 Capabilities

The Local Area Network Component supports the following general category of applications:
-Provides 100 mb service to the desktop and server farm

-Provides external connectivity to the Internet

6.4.19 To Be Condition

HQ intends to remain compliant with Agency directives for local area networking and be an Agency leader in user services. Upgrade and refreshment activities are forecast (contingent on funding) according to the schedules below. Other less critical activities (not shown here) are also anticipated.

TABLE 23

Product	*6.4.19.1 Completion Date*
Implement full network services for guest users	08/31/2003
Upgrade authentication services	09/30/2003
Upgrade remote access services	12/31/2003
Consolidate server architecture	Ongoing
Replace remaining 10Mb switch interfaces with 100Mb interfaces	12/31/2003
Upgrade internal core switches	12/31/2004

Listing of standard hardware and software:

TABLE 24

		Local Area	Networking Component	
Device	**DNS**	**Manf**	**Model**	**OS /Service**
Comm Server	Max2	Ascend	Max 4004	Dial In
Comm Server	Max1	Ascend	Max 4004	Dial In
Comm Server	hqdialer1	Cisco	AS 5350	Upgraded Dial In
Comm Server	hqdialer2	Cisco	AS 5350	Upgraded Dial In
Network Switch	LoadingDock	Cisco	2900	Cisco IOS
Network Switch	XeroxRoom	Cisco	2900	Cisco IOS
Network Switch	cat9e.hcn	Cisco	5000	Cisco IOS
Network Switch	cat9w.hcn	Cisco	5000	Cisco IOS
Network Switch	cat8w.hcn	Cisco	5000	Cisco IOS
Network Switch	cat6e.hcn	Cisco	5000	Cisco IOS
Network Switch	cat6w.hcn	Cisco	5000	Cisco IOS
Network Switch	cat5e.hcn	Cisco	5000	Cisco IOS

Network Switch	catce1.hcn	Cisco	5000	Cisco IOS
Network Switch	catce2.hcn	Cisco	5000	Cisco IOS
Network Switch	catnoc.hcn	Cisco	5000	Cisco IOS
Network Switch	sefcat1	Cisco	5000	Cisco IOS
Network Switch	sefcat2	Cisco	5000	Cisco IOS
Network Switch	cat9c.hcn	Cisco	5500	Cisco IOS
		Local Area	**Networking Component**	
Device	**DNS**	**Manf**	**Model**	**OS /Service**
Network Switch	cat8e.hcn	Cisco	5500	Cisco IOS
Network Switch	cat8c.hcn	Cisco	5500	Cisco IOS
Network Switch	cat7e.hcn	Cisco	5500	Cisco IOS
Network Switch	cat7c.hcn	Cisco	5500	Cisco IOS
Network Switch	cat7w.hcn	Cisco	5500	Cisco IOS
Network Switch	cat6c.hcn	Cisco	5500	Cisco IOS
Network Switch	cat5c.hcn	Cisco	5500	Cisco IOS
Network Switch	cat5w.hcn	Cisco	5500	Cisco IOS
Network Switch	cat4e.hcn	Cisco	5500	Cisco IOS
Network Switch	cat4c.hcn	Cisco	5500	Cisco IOS
Network Switch	cat4w.hcn	Cisco	5500	Cisco IOS
Network Switch	cat3e.hcn	Cisco	5500	Cisco IOS
Network Switch	cat3c.hcn	Cisco	5500	Cisco IOS
Network Switch	cat3w.hcn	Cisco	5500	Cisco IOS
Network Switch	catce.hcn	Cisco	5500	Cisco IOS
Network Switch	catcc.hcn	Cisco	5500	Cisco IOS
Network Switch	catcw.hcn	Cisco	5500	Cisco IOS
Network Switch	catnhcc.hcn	Cisco	5500	Cisco IOS
NT Server	PKI	Austin PC	P133	NT 4.0/Agency PKI
NT Server	HQX500	Compaq	Proliant	X.500 Back

				Store
Router	RSM-1.hcn	Cisco	Cat 5500	Cisco IOS
Unix Server	Blacktower	Sun	Sunfire V120	Upgraded ACE server
Unix Server	Diana	Sun	Ultra Enterprise 1	Solaris 7/X500
Unix Server	GuestNet	Sun	Ultra 10	Solaris 8/Firewall
Unix Server	Watchtower	Sun	Sunfire V120	Upgraded ACE server
Unix Server	NS1	Sun	Sun Sparc 5	Solaris 7/DNS
Unix Server	TwinTower	Sun	Sunfire V120	Upgraded ACE server
Unix Server	DevGate	Sun	Ultra 10	Solaris 8/Firewall
Unix Server	Morgan	Sun	Ultra Enterprise 1	Solaris 2.5.1/ACE Server
Unix Server	Merlin	Sun	Ultra Enterprise 1	Solaris 2.5.1/ACE Server
Unix Server	NS2	Sun	Sparc 5	Solaris 7/DNS
Unix Server	NS3	Compaq	Proliant	Solaris x86 2.6/DNS

6.4.20 Voice Component

The voice component consists of: telephones, local and long distance services, cell phone services, facsimile services, calling cards, voice mail, voice teleconferencing, PBX, etc. Support at HQ is outsourced through a performance-based contract covering all voice related services.

6.4.21 As is Condition

The majority of Lucent telephone desk sets at HQ are four years old. The HQ voice mail system operates on an older model Octel Overature 250 voice mail server. There is an Avaya IP Office call center PBX and voice mail for the HQ Help Desk operation. There is also an NEC 2000 PBX and voice mail server to support a secure facility within the HQ building. All local phone service is provided via CENTRX from a Verizon substation that terminates at the point-of-penetration (POP) within the HQ building.

6.4.22 Systems Description and Operational Concept

The purpose of voice services is to maintain quality voice communications to over 1,600 people at HQ. This consists of:

- Local ISDN (GSA WITS) phone service;

- Long distance (GSA FTS 2001) phone service;
- Incoming 800 service, provided by Verizon;
- Calling cards for 689 users, provided by MCI/WorldCom;
- Voice mail;
- Facsimile service to approximately 182 FAX machines;
- Verizon cell phone service, 375 users;
- Nextel cell phone service, 60 users, primarily in the area of safety and security;
- Nextel international cell phone service, 20 users;
- PBX for the HQ Help Desk, Avaya IP Office;
- PBX for the NASA Inspector General (IG), NEC 2000.

6.4.23 Production Network Diagram

Figure 27

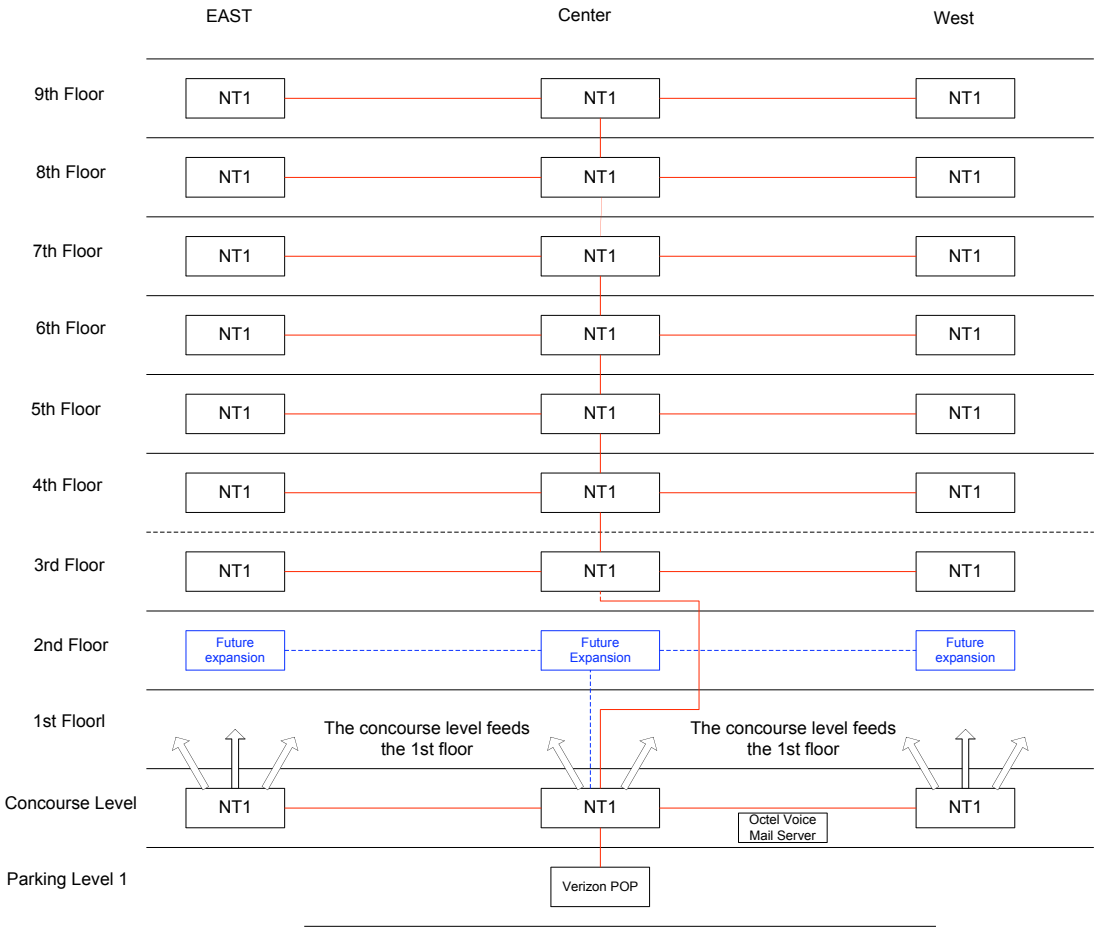

6.4.24 Systems and Support

HQ local voice mail services are provided by an Octel Overature 250. The Avaya supports 12 Help Desk agents. The NEC supports 14 NASA personnel. A staff of seven contractor personnel provides support to all HQ voice services.

6.4.25 Facilities

The Octel Overature 250 is located in the NASA HQ Computer Center (NHCC). The HQ POP is located on the P1 floor of the HQ building. The Avaya IP Office is located in the Concourse East phone room. The NEC 2000 PBX is located in a secure area on the 6th floor of the HQ building.

6.4.26 Technology Flashpoints

The ten year old Octel Overature 250 is reaching maximum capacity and nearing end-of-life. The Lucent desk sets which are used by over 90% of the HQ users are no longer being produced or serviced by the manufacturer.
Because we have no PBX within the building and are serviced directly from the Verizon CENTRX we can lose phone service within the building in an emergency. Phone service was lost intermittently on September 11, 2001.

6.4.27 Compliance

NASA HQ complies with the American with Disabilities Act (ADA) by supplying Telecommunications device for the deaf (TDD) devices when requested.

6.4.28 Capabilities

The HQ voice component supports:

- Local, long distance, and international dialing;
- Voice Mail;
- Voice Conferencing;
- Facsimile services;
- Cell phone services.

6.4.29 To Be Condition (Pending funding availability)

PBX upgrade planned.

6.4.30 Video Component #1 of 3

ViTS Support

The Video Teleconferencing Service (ViTS) at NASA Headquarters is part of an Agency-wide service which has been operational since 1987. It is overseen by Marshall Space Flight Center, originally under PSCN and now under NISN on the CSOC contract. NISN provides periodic upgrades, the last upgrade in 2000. Operation of the Headquarters ViTS Facility is currently locally contracted to ISEM. (Technical support through NISN and CSOC is accomplished by the HQ Gateway technician.)

6.4.31 As is Condition

The HQ ViTS if fully operational with a current control problem in rooms HQ1 and HQ2 (see definitions below) which is being re-engineered by NISN through the CSOC contract at MSFC.

6.4.32 Systems Description and Operational Concept

The HQ ViTS Facility under the ISEM contract consists of two full-service conference rooms, designated rooms HQ1 and HQ2, in a suite in room CD-61. Two additional capabilities have been added to the ViTS responsibilities: a back-up room in CJ-33, and Administrator's video conferencing unit, designated HQ3 which is presently in the Headquarters Columbia Action Team (HCAT) conference room in 7C-61.

The Headquarters ViTS support under ISEM consists of scheduling conferences using the Video Conference Request System (VCRS) on CSOC secure server at MSFC, establishing the connections for conferences; operating the ViTS rooms during meetings; enhancing customer service locally and Agency-wide; and other administrative tasks.

6.4.33 Systems and Support

Primarily ViTS uses Polycom codecs to transform baseband audio and video into digital packets transported by ISDN lines. Each room (HQ1, HQ2, HQ3, and CJ-33) has its own codec, associated ISDN lines, and one or more television cameras and an audio system. HQ1 and HQ2, being full-service rooms, also have additional equipment and capabilities.

Three ISEM employees staff the HQ ViTS Facility: a manager, Coordinator, and Conference Scheduler.

6.4.34 Facilities

CD-61 houses the HQ1 and HQ2 ViTS rooms. Room CJ-33 is a conference room in the Audio Visual Support Services suite and it holds the back-up video conferencing unit. HQ3 was originally placed in the NASA Administrator's suite, but was recently moved to the Headquarters Columbia Action Team conference room in 7D-

Scheduling conferences is accomplished in CD-61, but since VCRS is a web-based application, scheduling may occur from any location where access to the secure server at MSFC can be accomplished.

6.4.35 Technology Flashpoints

There are three areas of risk to the proper functioning of the ViTS Facility:

1. The Video Conference Request System (VCRS) is the Agency-wide scheduling system on which we depend to schedule conferences and retrieve conference information. VCRS is a web-based application hosted on a secure server at MSFC. When VCRS is not available, for any of a number of possible reasons, HQ ViTS is severely hampered. We have prepared for such times by instituting certain procedures, but all ViTS sites depend heavily on VCRS for operation of local sites and for conducting all Agency ViTS conferences.

2. ViTS is dependent on MCI through the FTS 2001 telecommunications contract. MCI provides the long-distance ISDN lines and video bridging service for most multi-party video conferences and for some point-to-point conferences. MCI, as a commercial entity, has a financial interest in providing quality service, but MCI is still outside the control of NASA. Quality of service varies with the particular ISDN connections, the MCI equipment, and the MCI personnel.

3. A new IP-based video conferencing technology is currently increasing in use world-wide. HQ ViTS is ISDN-based and is incompatible with the newer technology. Until NISN through CSOC at MSFC reconfigures the ViTS facilities at all NASA sites to allow both technologies to be used, HQ ViTS will be limited to conducting meetings using the ISDN technology.

6.4.36 Compliance

ViTS is a NASA-wide service with video conferencing rooms at all locations, including international sites. Using current ISDN technology and protocols, HQ ViTS is compatible with all other ISDN-based video conferencing units, in compliance with international standards, and uses a commercial carrier (MCI) to provide connectivity. As noted above, however, HQ ViTS is not configured to use the newer IP-based technology.

6.4.37 Capabilities

HQ ViTS is capable of scheduling and conducting ISDN video conferences at a wide range of data rates anywhere in the world where the telecommunications infrastructure and terminal equipment exists. HQ1, HQ2, and HQ3 ViTS transmit and receive full-motion video and still-image graphics, multiplexed on the T-1 lines at data rates from 56 kbs to 1,472 kbs. (Most conferences are conducted at 384 kbs.) CJ-33 is limited in bandwidth to 128 kbs and has limited

capabilities. Computer interfaces with the ViTS systems allow all computer applications to be shared. Television signals, such as NASA TV and videotape playbacks can also be shared in HQ1 and HQ2. Videotape recording is routinely accomplished on request in HQ1, HQ2, and HQ3, while audio recording in all four locations can be accomplished with advance requests. On request of ViTS conference leaders, video and audio streaming on the Internet is available in HQ2, and is available in HQ1 on advance request.

6.4.38 To Be Condition

Upgrades in the planning stages by NISN through CSOC at MSFC include:

1. Reconfiguring the HQ1, HQ2, and HQ3 ViTS units to conduct ISDN or IP video conferences; and
2. Modifying the HQ1 and HQ2 control systems to address on-going technical problems which have plagued all the full-service ViTS rooms. Once the HQ rooms have been successfully modified to address the control problem, the remaining full-service rooms at the other NASA locations will have the same modifications installed.

6.4.39 Referenced Documents

Reference documentation for ViTS is located at the NISN Document Repository at http://www.nisn.nasa.gov/vits/index.html.

6.4.40 Video Component #2 of 3

Conference Room / AV Support

Introduction AVSS (Audiovisual Support Services)

The AVSS is a division of the LESCO subcontract, which provides Mail Room, Move Services, Help Desk, Document Services, and Audiovisual Support.

6.4.41 As is Condition

The AVSS provides basic AV support of the major meeting areas and conference pods within NASA HQ. It is an area dependent on an aging inventory with some progress being made to upgrade current facilities and equipment. Within the past two years progress has been made in the replacement of older LCD projection systems with state of the art Sony VX 50 projectors. Other improvements have been implemented with the assistance of CSOC. These improvements have focused on meeting room teleconferencing and audio pick up.

6.4.42 Systems Description and Operational Concept

AVSS supports the following room areas: MIC 3, 5,6,7 and the PRC. The Auditorium. ACR 1, ACR 2 and 13 conference pods. An equipment loan service for offsite and/or non-supported rooms is also provided. Customers may order services via the FHDS, fax, e-mail, or by telephone at 358-0037. In addition to meeting support projectionist services are provided by a staff of three AVSS technicians. These persons also serve in the actual set up and delivery of equipment.

6.4.43 Systems and Support

AVSS consists of a Supervisor, Manager, and staff of three technicians. Help desk staff of two processes most incoming scheduling information and relays last minute information. AVSS interacts with ISEM Contract for usage of HQ local area network and provision of requests as needed. AVSS interacts with CSOC in the provision of teleconference systems. AVSS interacts with the VITS for tape duplications. All codes have access to video and audiotape duplication, transcription services. Basic AV equipment loans for items such as portable LCD projectors slide projectors, and flipcharts can be arranged via the help desk.

6.4.44 Facilities

The AVSS offices are located within the LESCO suite at HQ CJ33. Other areas are mentioned above.

6.4.45 Technology Flashpoints

Expansion of existing video duplication. (LESCO) Current systems require new VCRs and or DVD recorders. Current equipment is showing wear or needs replacement. (see item 3 under “to be condition”)

Keeping an adequate supply and quality of loaner equipment. In particular would be LCD projectors, audio recorders, and video cameras. There was a recent acquisition of LCD projectors but there remains a great need for additional units. Main problem with the loaner pool has been providing "stand in" equipment while orders or funds are filled for code areas. Some loans have exceeded 6 months in spite of the intention of the loaner pool to be a "short term " loaner pool.

6.4.46 Compliance

The AVSS does get involved in the provision of office area televisions, and related AV supplies for HQ codes. Concerns for future acquisitions would be the anticipation of the HDTV regulations slated for implementation during year 2006 and an awareness of future data transmission requirements. It would also be in the interest of related areas such as CSOC, VITS, and VOTS to have the ability to interface with existing AVSS facilities (vice versa) to avoid duplication of services or equipment provisions. In the design of future meeting spaces, we attempt to take this into consideration.

6.4.47 Capabilities

Response to technical adjustments - requests within a five-minute page time.
Flexibility to the varied needs of all HQ codes.
Projection support.
Meeting room support.
Limited offsite support within the DC area only.

6.4.48 To Be Condition

To provide easy to use, state of the art equipment, and services for the satisfaction of NASA customers in a cost effective manner.

1. Local video links (intra-room) are needed from room wio boxes to LCD projectors in MIC 3, 5, 6, 7 and PRC. The lines should run between the existing WIO boxes into a video patch bay in the projection room and then from the patch bay to the projectors. All lines should be RF coax with BNC ends. Patch pays would use BNC to BNC jumpers, or telco style jumpers.

2. Provision for future meeting areas as they develop. "Headquarters Conference Center" - 2nd floor and "MIC 8".- 8th Floor.

3. The ability to duplicate video/audio from-to computer based media. I.e. DVD. / Quick time/Real Video/MP3-4 (various compressions) and the related software to do so. A streaming Coder/Decoder would be useful as part of this set up. The "workstation" could be part of the video duplication area. Certain codes have this ability, but a central location for these services is not readily available at this time.

4. Patching from the MIC rooms into the NASA TV hub. At this time, MIC three (HQ-3H46) requires reconnection. This system is used for coverage of meetings used for general broadcast into other meeting rooms or centers. All rooms should be easily convertible for various uses such as VITS; VOTS etc. to do so will require compatible audio-video inputs and outputs.

5. Preparations for the acquisition of HDTV video equipment prior to 2006. FCC transmissions will become based on the HDTV protocols by that year. Existing NTSC based equipment will require converters to function with the new transmission standard.

6.4.49 Video Component #3 of 3

<u>Video Production And Distribution Systems Including NASA TV</u>

It is NASA Headquarters Television's goal to provide the highest quality operational support to the Office of Public Affairs and NASA's Human Space Flight Enterprise as related to the Agency's statutory obligation to provide for the widest and most practicable dissemination of information to the public. NASA Television operates as primary distribution point for the

majority of NASA's video to U.S. national and local media, international media, and other clients.

6.4.50 As is Condition

The HQ Audio Video Center (AVC) is an analog television facility primarily using the Sony Beta SP video format and is fully functional despite a significant inventory of equipment that is over twelve years old. An Odetics cart system was replaced with a video server and automation system in January of 2003. Future upgrades are discussed in the "To Be Condition" section that follows.

6.4.51 Systems Description and Operational Concept

Production Control Room - PCR - (CA10):
Contains video switcher, camera controls, character generator, still store, intercom, and SCAMA circuits to support live and taped television programming.

Audio Production Control Room - ACR - (CA08):
Contains audio console, intercom, tele-hybrids, and an interface to the support audio circuit to support live and taped television programming.

Equipment Room - ER - (CE37):
Contains equipment frames, audio/video router, patch panels, and reference signal generating equipment that constitutes the 'heart' of the AVC. The audio/video router is a matrix router that enables point-to-point connection of equipment. Test stations are included for engineering monitoring and set-up. The Equipment Room also houses the automation and server system used to program NASA Television. The ER also has connectivity to the HQ Auditorium to support press briefings and other events.

Post Production Control Room – PPR - (CA30):
Contains video editing equipment, a character generator, a still store, and an audio console for editing programming that will air on NASA Television. SCAMA circuits are available to co-ordinate video feeds from other NASA Centers.

Media Recording – MR - (CB23):
Contains videotape recorders capable of providing multiple copies of Beta SP and VHS format video.

Graphics – GFX - (CA50):
Contains a computer system optimized to provide broadcast quality still graphics and animations.

Studio (CC25):
Contains a lighting grid with television lights and dimmer panel, an intercom system, and connectivity for three camera television productions.

Transmission Operations Center – TOC - (CE12):

Contains fiber transmission and reception equipment to send and receive programming for NASA Television. Also contains fiber interface to the Verizon Audio Video Operations Center (AVOC) that allows connectivity primarily to/from meeting rooms on Capitol Hill.

Figure 28

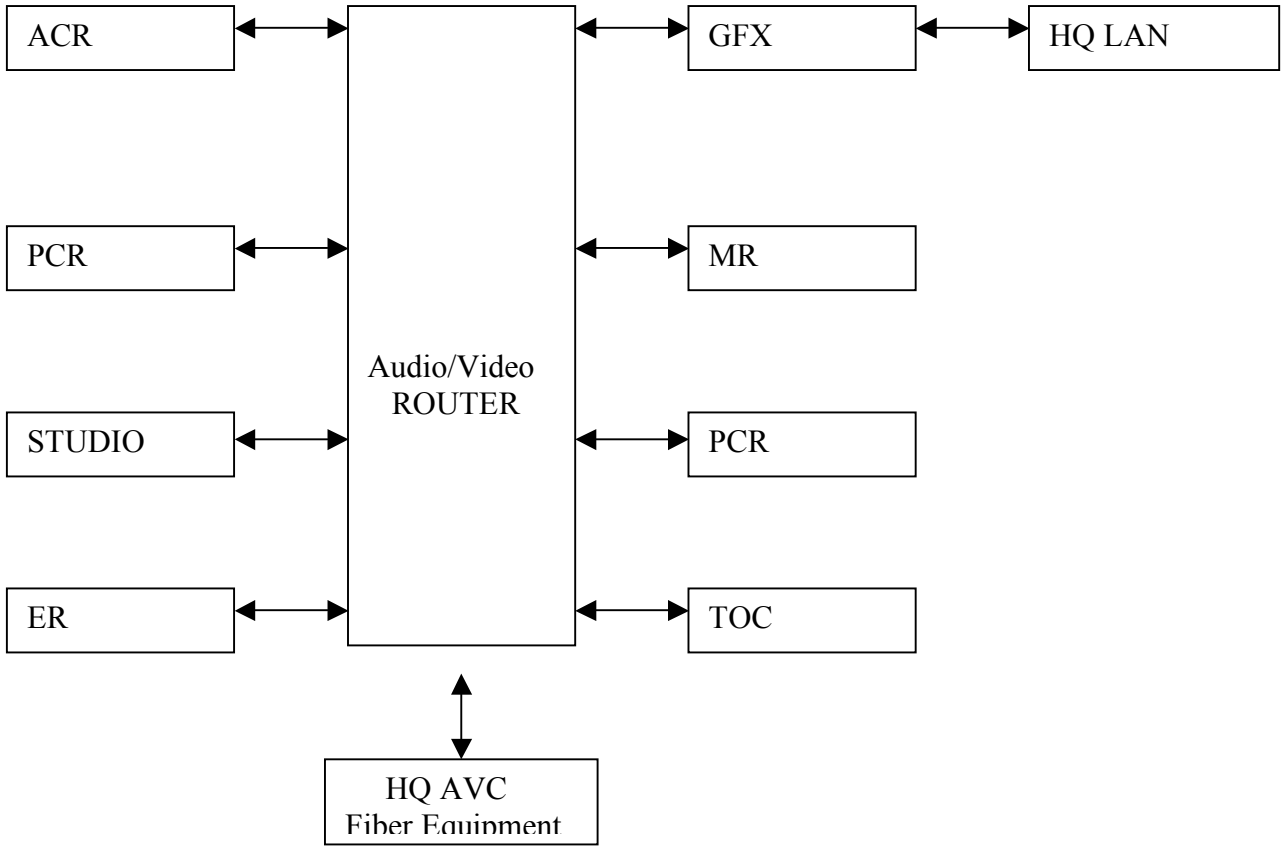

6.4.52 Production Network Diagram

Connectivity to/from GSFC TV is via three fibers leased from Verizon.
Connectivity to/from the Verizon AVOC is via fiber.

Figure 29

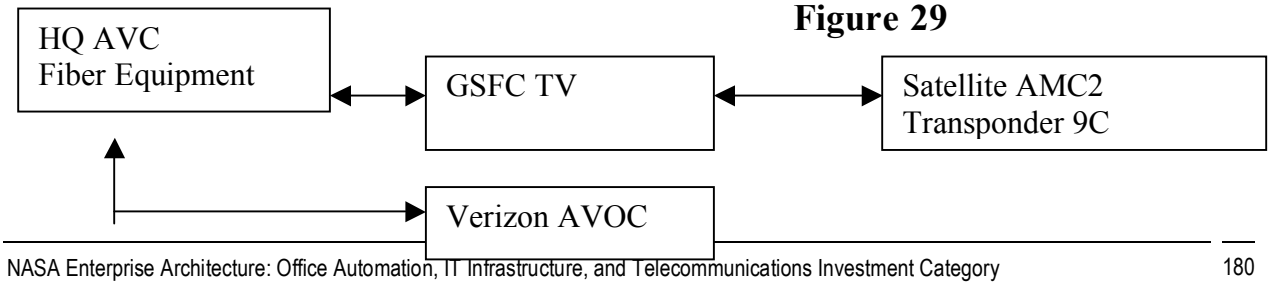

6.4.53 Systems and Support

NASA Television services at Headquarters are provided by Innovative Technologies, Inc., under contract with the Office of Public Affairs (Code P).

6.4.54 Facilities

The NASA Television facility is located on the Concourse level of the NASA Headquarters Building. Rooms C-A50 to C-E37.

6.4.55 Technology Flashpoints

There are numerous areas within the AVC where disruption to normal functions can occur. Below is a list of those areas where a failure would seriously threaten operations:

1. The Verizon fiber equipment connects the HQ AVC to GSFC TV and ultimately the NASA satellite AMC 2 transponder 9C. This equipment has failed before resulting in a loss of signal to/from GSFC and the NASA satellite AMC 2 transponder 9C.
2. The AVC audio/video router connects most of the equipment I/O. A failure would require significant audio and video patching to restore even the most basic operations.
3. The ACR audio console processes all audio for television productions and a failure would extremely limit any ability to process audio.
4. The production video switcher mixes all video sources for productions. A single camera production would be the only option possible in the event of a failure.
5. A power outage in the building would affect all of the equipment in the AVC. Currently, only the new server system is on an UPS.

6.4.56 Compliance

NASA STD 2818
SMPTE 170M
SMPTE 296M
Federal Communication Commission (FCC) regulations
Electronic Industries Association (EIA)
Society of Motion Picture and Television Engineers (SMPTE) standards
National Television Standards Commission (NTSC) standards
National Cable Television Association (NCTA) standards
Advanced Television Standards Commission (ATSC)
NPG 1620.1 NASA SECURITY HANDBOOK
NPG 2810.1 SECURITY OF INFORMATION TECHNOLOGY
NMI 1450.11 NASA MAIL MANAGEMENT PROGRAM

6.4.57 Capabilities

NASA Television provides live coverage of Agency activities and missions, as well as resource video to the news media, educational programming to teachers, students and the general public. NASA Television is broadcast on AMC-2, transponder 9C, C-Band, located at 85 degrees West longitude. The frequency is 3880.0 MHz. Polarization is vertical and audio is monaural at 6.8 MHz.

NASA Television produces daily news items, live press conferences, live satellite interviews, and television and video on the web production services.

NASA Television has begun the transition to Standard Digital and/or High Definition Television. A digital video server that was installed in January 2003 became operational on-line February 1, 2003. The server has the ability to play 4 separate video streams and has the capacity to hold up to 300 hours of digital video.

6.4.58 To Be Condition

NASA TV at HQ began the transition to digital television with the installation of an MPEG-2 video server and an automation system. It is anticipated that HQ will migrate toward DVC Pro as a digital videotape format. The DTV Program Office at MSFC is spearheading a digital multi-channel initiative that will include control for the system at HQ.

Descriptions of the DTV and Multi-channel initiatives are found within the DTV Working Group website at http://www.msfc.nasa.gov/DTV/. Details are included within NASA STD. 2818.

6.4.59 Referenced Documents

NASA STD.2818

6.5 Electronic Work Environment Segment

6.5.1 Messaging and Collaboration Component #1

6.5.1.1 Email

The HQ email, Blackberry, and calendaring systems provides Internet-standard compliant messaging for internal users and HQ users when they are outside the HQ network. The email system offers SMTP mail exchange, POP mail retrieval, and mailing list functionality. The Meeting Maker program provides group scheduling capability for all users and conference facilities located at Headquarters. Additionally HQ uses the Skytel commercial service for coast to coast paging coverage.

6.5.2 As is Condition

The current HQ email system is based on open Internet-standards-compliant protocols and is implemented on UNIX systems with a variety of open-source servers and software suites; these include: sendmail, qpopper, and majordomo. The system was deployed about eight years ago and is beginning to show its age.

The present system is becoming inadequate in the face of increasing email usage and mail size. Users would like to be able to store their mail on the server so they can get at it from anywhere – work, home, travel – but the POP server was never designed or sized to handle large quantities of saved mail. When users do save significant mail on the POP server, it severely impacts mail retrieval.

Likewise, the explosion in spam volume and increasing threat of Microsoft-oriented viruses has put a load on the mail transport server which it was never designed. These slow mail deliver, especially when large mailing lists such as those sent by Public Affairs.

(An effort is currently underway to build a replacement email system that cures all these problems, scales gracefully and affordably to meet increased demands, and has no single points of failure to cause service interruptions (planned or unplanned). It will offer 1GB/user of stored email and provide access to manage mail folders via IMAP and WebMail – both over encrypted channels. This project is being documented elsewhere and will not be described further here.)

6.5.3 Systems Description and Operational Concept

DNS MX records direct incoming mail to the SMTP server. Sendmail accepts the mail and stores it in the queue. It then looks up the target username in the X.500 directory so it can deliver mail to numerous "CommonName" variations (e.g., sokeefe, sean.okeefe, sean.okeefe-1). Once the name is found for the HQ user, it is re-queued for delivery to the POP server.

The POP server also runs sendmail, accepts messages from the SMTP server, and delivers them to the user's mailbox file in UNIX-standard mbox format. The qpopper POP server runs on this box allowing users to connect their mail clients and retrieve mail.

A third box runs the mailing list manager, majordomo; it injects mail into the SMTP server box for local and remote users.

6.5.4 Production Network Diagram

The email servers are located behind the public firewall as depicted in Figure 30 below.

Figure 30

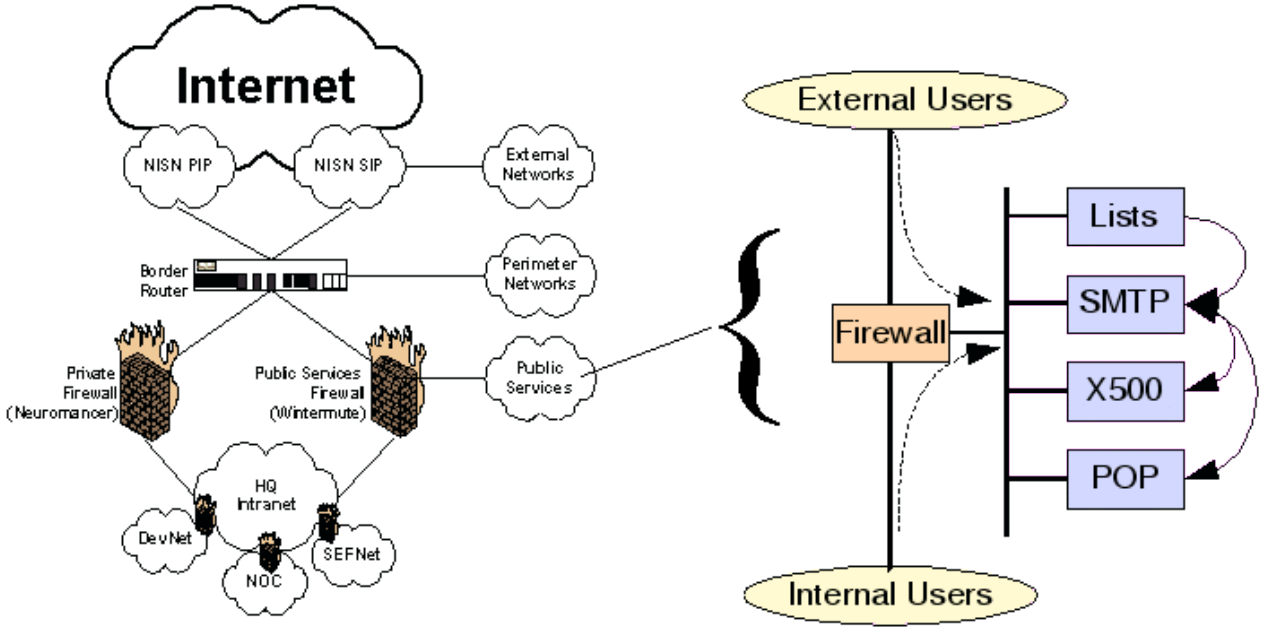

6.5.5 Systems and Support

All systems are Sun Solaris, some with attached RAID systems for storage. Little human intervention is required except to monitor POP mailbox size. Exceptional circumstances such as a virus-triggered mail storm has required close attention to manage queues, put up temporary blocks from infected sites, etc.

6.5.6 Facilities

Four Sun servers (SMTP, POP, Listserv, Admin) reside on the NHCC Operations area.

6.5.7 Technology Flashpoints

The volume of email has gone up dramatically over the last several years. Additionally, users desire to keep their email on the server so that it can be accessed from any location. This has resulted in the excessive email delays during peak periods.

6.5.8 Compliance

The NASA HQ email systems are compliant with the following:
-NASA-STD-2810
-A-130 Security
-Headquarters server build standards
-RFC2821 Simple Mail Transport Protocol: http://www.ietf.org/rfc/rfc2821.txt?number=2821
-RFC1939 Post Office Protocol: http://www.ietf.org/rfc/rfc1939.txt

6.5.9 Capabilities

Supports approximately 2000 users, all with multiple X.500-based "Common Name" variants. Mail through the system is about 100,000 messages per day.

6.5.10 To Be Condition

An effort is currently underway to build a replacement email system that cures all these problems, scales gracefully and affordably to meet increased demands, and has no single points of failure to cause service interruptions (planned or unplanned). It will offer 1GB/user of stored email and provide access to manage mail folders via IMAP and WebMail – both over encrypted channels. The new architecture and design are currently ongoing. A directory-based system will still be used to allow delivery on common names, but multiple small servers in a fault-tolerant configuration will provide robustness and cost-effective scalability – as opposed to conventional "forklift upgrades". It will employ a pair of load-balancers, a handful of identically-configured mail servers (SMTP, IMAP, WebMail, LDAP replica), and a shared back-end filestore on best-of-breed NetworkAppliance hardware.

6.5.11 Referenced Documents

- Sendmail mail transport agent: http://www.sendmail.org/
- Qpopper POP server: http://www.eudora.com/qpopper/
- Majordomo mailing list manager: http://www.greatcircle.com/majordomo/
- RFC2821 Simple Mail Transport Protocol: http://www.ietf.org/rfc/rfc2821.txt?number=2821
- RFC1939 Post Office Protocol: http://www.ietf.org/rfc/rfc1939.txt

6.5.12 Messaging and Collaboration Component #2

Blackberry System

The NASA HQ Blackberry system provides secure, encrypted NASA HQ messaging to Blackberry handheld devices.

6.5.13 As is Condition

The NASA HQ Blackberry System was deployed as a production system in April, 2003. It previously served approximately 100 users as a pilot system. This system is currently (June 26, 2003) serving 140 Blackberry users with 4 different Blackberry models and 3 different wireless vendors.

The Blackberry System was deployed with a non-standard architecture due to incompatibility with NASA HQ email server. In addition, the Blackberry desktop software was not deployed to users because it only synchronizes with Microsoft Outlook or Lotus Notes and offers PC support only.

Systems description and Operational Concept

The BlackBerry Enterprise Server performs email redirection for all BlackBerry users in an organization. It performs the following functions for each user:

Monitors the user's inbox for new mail
Applies filters (defined at the server or the user level) to new messages to determine if and how the BlackBerry service relays the message to the user's BlackBerry handheld
Compresses and encrypts new messages and delivers them to the BlackBerry handheld
Receives messages composed on the BlackBerry handheld, then decrypts and decompresses the messages for the corporate Lotus Domino Server to deliver
Correlates messages from BlackBerry users' Domino mailboxes to BlackBerry-specific identifiers in the BlackBerry State Database

The BlackBerry Enterprise Server runs as a Lotus Domino Server add-in task that monitors multiple users over a single administrative connection to the Lotus Domino server.

6.5.14 Production Network Diagram

Figure 31, Production Network Diagram

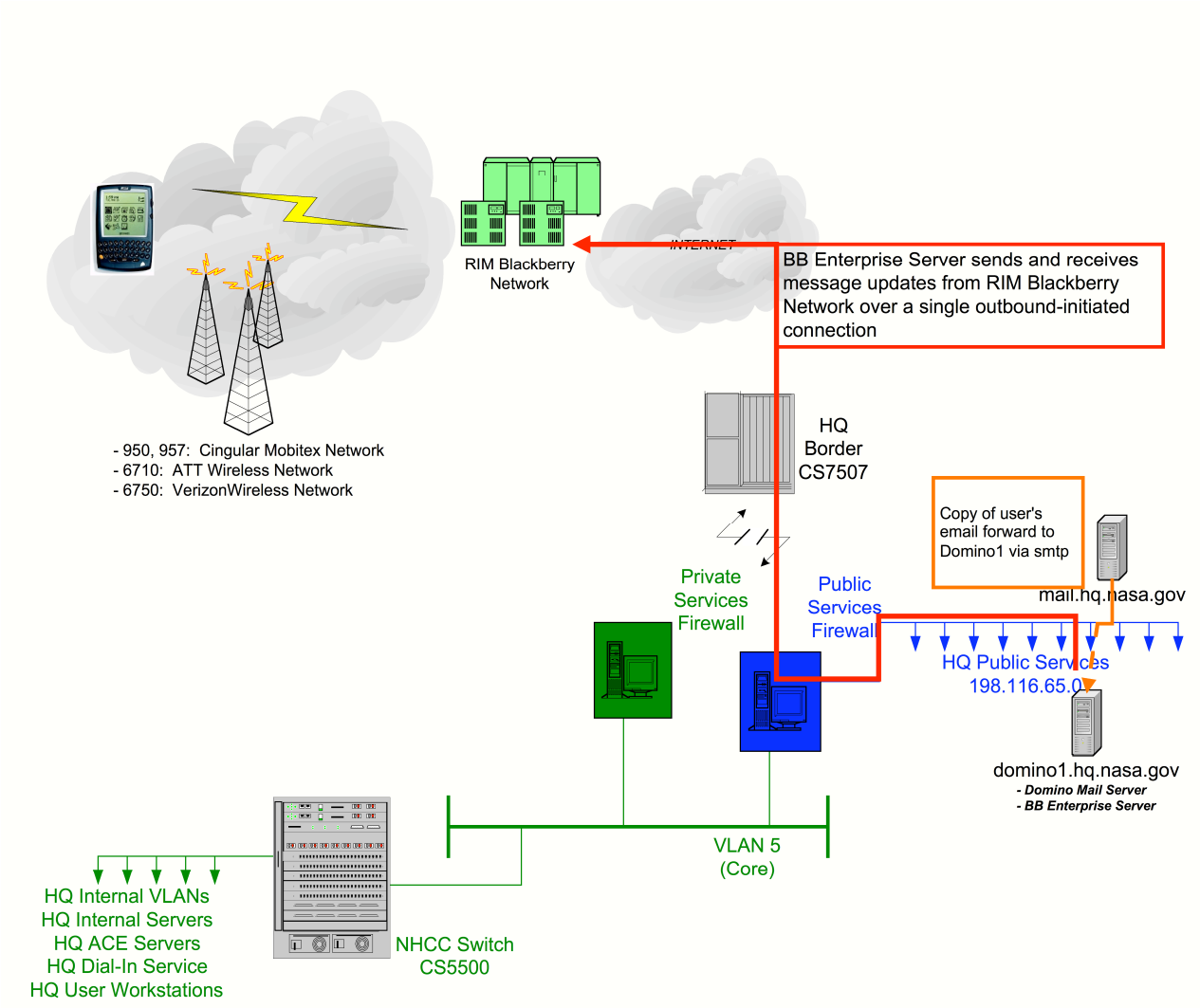

6.5.15 Systems and Support

Hardware/software requirements

- Production Server (BES1) and Test/Backup Server (BES2):
  - Hardware: DELL PowerEdge 2600
  - O/S: Windows 2000
  - Software: Blackberry Enterprise Server 2.1, Domino Enterprise Server R6
- Clients

- Blackberry 950 (Cingular Mobitex)
- Blackberry 957 (Cingular Mobitex)
- Blackberry 5810, 6710, 6210 (ATTWS)
- Blackberry 6750 (Verizon Wireless)

6.5.16 Facilities

The production server is located in the NASA HQ NHCC. The test server is located in the Systems Engineering Facility.

6.5.17 Technology Flashpoints

Non-standard implementation. RIM (the COTS vendor) could migrate to a configuration that requires closer integration with desktop software or the email server.

6.5.18 Compliance

The Blackberry/Domino server is NPG 2810 compliant. The Blackberry devices are configured with some 2810 deviations to maintain usability. For example, the handheld password has a minimum of 4 characters.

6.5.19 Capabilities

The Blackberry service at Headquarters allows for the secure, remote, transmission, and reception of email over the air. The devices can also be used as a pager, telephone and Personal Information Manager (PIM).

6.5.20 To Be Condition

Blackberry/Domino servers and licenses will be added as needed to support growth in the user base. New Blackberry models and services will be supported as needed.

6.5.21 Public Web Component

"Web Services" is herein defined as "all services offered by NASA HQ to the public via the World Wide Web;" "public" is defined per *President's Management Agenda (PMA)* as the audience segment of "Government to Public" communication. Items outside the scope of this document include those services rendered to other elements identified in the *PMA*, i.e., "Government to Business" or "Government to Government." The majority of Web Services offered from NASA HQ are internet sites, of traditional constitution: networked server running a web server, hosting web pages, consisting of varying degrees of operability and capability. Access to elements of the Internet sites might be controlled or tailored according to requirements; similarly, navigation and interactivity might vary significantly based on the purpose and/or audience segment served by the site. Though primarily one-way, informative or

encyclopedic, some HQ-hosted Internet sites are multidirectional, interrogative or collaborative in nature. Though some of the serviced offered are "HQ-centric," in that they deal with the narrow concerns of Offices unique to Headquarters, most are Agency- and Enterprise-level sites with national or international audiences. The majority of web services are outsourced to a cost-plus contract.

6.5.22 As is Condition

NASA HQ currently supports more than 110 public web sites distributed over 13 public web servers; these servers host content for HQ-centric, Agency and Enterprise-level sites. One Internet site on one server, the Office of Earth Science's "Destination: Earth" (earth.nasa.gov) consists of over 4,700 discreet pages; it receives over 3.5 million hits a month. While only a quantitative measure, it is illustrative of the significance NASA HQ web services have on Agency outreach, education, communication and business processes.

Many of the servers hosting NASA HQ web services are new and robust devices, procured as part of larger Enterprise IT strategies and located at HQ to meet a variety of requirements. Some devices are older, with the median age of a HQ web server being 48 months. The two most common configurations are NT-SQL Server-Netscape and SUN-Oracle-Netscape; some variation within these configurations occurs in response to specific requirements as necessary.

6.5.23 Systems description and Operational Concept

The purpose of NASA HQ Web Services is to support Agency goals and objectives, not least of which is the charge to "inspire the next generation of explorers as only NASA can." Specific requirements are generated from the Headquarters Tactical Plan and, in a more direct support of Agency objectives, from the strategies of the Enterprises. As such, there are no independent goals for NASA Web Services; they exist to further Agency aims and will evolve in response to Agency initiatives and requirements. It is important to note that many of the systems at NASA HQ are comprised of or integrally linked to components or entire systems hosted elsewhere; e.g., "Destination:Earth" integrates elements from three other NASA Centers.

6.5.24 Production Network Diagram

The majority of the HQ production Web services are located either behind the public services firewall or on the HQ Intranet as shown in Figure 1 above (in Desktop Hardware and Software Component).

6.5.25 Systems and Support

As stated earlier, HQ consists of approximately 13 public web servers are a mix of NT and UNIX devices. All run on the public services network. Support is outsourced to a cost-plus contract; support for Enterprise servers is carried out in accordance with Enterprise IT Strategies, usually under the direction of Enterprise CIOs.

6.5.26 Facilities

As stated earlier, many of the systems at NASA HQ are comprised of or integrally linked to components or entire systems hosted elsewhere.

6.5.27 Technology Flashpoints

Some of the older servers need to be refreshed pending funding availability.

6.5.28 Compliance

The NASA HQ web services are compliant with all HQ, Agency and Federal directives.

TABLE 25

Specification	Compliant
NASA-STD-2810	Yes
Section 508	Yes, for 1.0 and X.0 applications
Software Management Guide (SMG)	Yes
ISEM SOW	Yes
Desktop baseline document	Yes
NASA-STD-2804G/2805G	Yes

6.5.29 Capabilities

NASA HQ Web Services provides a variety of high-level capability, including web page hosting, multidirectional computing, interactive sessions, secure exchange of data, robust data processing, high resolution graphic imagery, high-bandwidth access and both server- and browser-side database-driven XML output site design.

6.5.30 To Be Condition

NASA Headquarters is committed to enabling Web Services: we will remain a reliable, resilient, flexible option for all Agency- and Enterprise-level business, educational and outreach activity. To accomplish this, an appropriate infusion of new technology and practices will be used alongside traditional methods to yield the most cost-effective solution to specific requirements. Web Services are continually evolving to meet NASA requirements. NASA HQ will implement technology as appropriate. For example, the Agency is aligned with other Federal initiatives such as the Federal Enterprise Architecture, which calls for using XML as a means of promoting efficient knowledge management practices, especially in the area of re-use. The Enterprises at NASA HQ are in the forefront of implementing XML in a secure, cost-effective and strategic manner. New and emerging technologies have often been introduced to the Agency in the past in this way; NASA HQ will continue to take a leading role in pioneering safe and effective use of technology, balancing risk against impact. A regular technology refresh of all web servers will significantly reduce risk in this area, as well.

7 JET PROPULSION LABORATORY (JPL)

7.1 Computing Services Segment

7.1.1 Desktop Hardware and Software Component

Desktop Computing Services include support for general-purpose desktop and portable computer systems, associated peripherals and software. The software on these systems include an Operating System and a Core set of software applications used for interoperability as defined in NASA Standard 2804. This includes applications used for e-mail, calendaring, document interchange, communications and others. Hardware includes general purpose Intel and Apple Macintosh based systems, with variable configurations of disk, RAM, monitor, printer and removable R/W media devices.

7.1.2 As-Is Condition

JPL has outsourced the support and hardware used for Interoperable computing. All JPL and category-A contractors who require interoperability are required to subscribe to the services provided by our support provider.

This support includes:

- Replenishment – supplying of a general purpose computer system, and associated peripherals, capable of running the current Windows, Macintosh, or Linux RedHat Operating Systems. Users select their configuration from a catalog of JPL approved components.
- Help Desk – problem resolution with supported hardware and software
- System Administration – planning, analysis, system engineering, and maintenance
- Hardware Maintenance – preventive and corrective maintenance, installation, upgrade and movement

7.1.3 Systems Description and Operational Concept

JPL has approximately 10,000 desktop and portable systems. These are broken up into those that provide interoperability and those that do not. Interoperable systems are defined as those that are used to provide the capabilities defined in NASA Standard 2804 (word processing, e-mail, calendaring, etc.); this includes about 7500 systems. The remaining systems are used for special purpose applications in laboratories and with instruments.

Interoperable desktop systems include both desktop and portable systems along with their associated peripherals (printers, scanners, rotating media storage devices). These systems may be running under the Windows, Macintosh or Linux Operating Systems. Interoperable Windows and Macintosh desktop systems must be supported through our DNS support contract. Linux

systems may be supported but are not required. It is the responsibility of the support provider to maintain these systems to assure interoperability and security.

The DNS contract is based on the concept that the support provider recommends changes and updates to the hardware catalog and software configurations, and JPL approves these changes. This puts the responsibility on the contractor to know what is available in the industry and make recommendations to meet JPL's needs.

7.1.4 Systems and Support

Services are provided by either the DNS support contractor, or Information Services Operations

Technology Flashpoints

- Hardware
    - Apple/IBM G5 processor
    - Intel Itanium processor
    - Intel Banias mobile processor
    - 802.11G wireless
    - 802.11I or other standardized wireless security
    - Integration of Bluetooth in portables and peripherals
    - Tablet PCs
    - Rendezvous enabled printers and other devices
- Software
    - Changes in operating systems and applications that enable Single Sign-on or single password
    - Rollout Windows XP
    - Office 2003 – support for XML as an interchange format
    - Macintosh OS X 10.3 – Addition of enterprise directory and authorization services, including kerberization of all services
    - NASA support for agency-wide Security patch service (Patchlink)
    - Discontinuance of Internet Explorer on Macintosh OS X
- NASA
    - Full compliance with NPG 280.1 as required by renewal of the NASA/JPL Prime contract in October 2003.

7.1.5 Compliance

JPL operates under a contract with NASA that includes some NASA standards and NPGs. JPL is currently required to comply fully with NASA Standards 2804 and 2805 and some parts of NPG 2810.1.
JPL is in full compliance with the current versions of NASA Standards 2804 and 2805, except where it conflicts with the terms of the JPL DNS support contract. JPL's contract for support services does not provide for the immediate rollout of major updates to the Core Operating Systems. Windows XP and Macintosh OS X are being phased in over a 3-year period. Some acceleration is supported where security is a concern, as in the case of OS X. JPL has received a

waiver from the conditions imposed by the NASA CIO office on the conditional deployment of Windows XP, allowing JPL to start rollout immediately.

7.1.6 To-Be Condition

No foreseeable changes.

7.1.7 References

- DNS Contract – JPL/OAO - contract 961148
- NASA-STD-2904G
- NASA-STD-2805G
- NPG 2810.1

7.1.8 Data Center Component

JPL Data Center services are chartered to provide users and project or departmental applications the following in JPL's distributed networked environment:

- Convenient and secure access to structured and unstructured data repositories
- Database hosting configuration, and administration
- Application hosting configuration, integration, and administration
- Tera-bytes of clustered network attached storage and near-line storage.
- Experienced administration staff
- Site- or bulk-license purchase

7.1.9 As is Condition

Three types of available hosting services

- Oracle Enterprise Database Hosting Service
- Oracle Standard Database Hosting Service
- Application Hosting Service

7.1.10 Systems Description and Operational Concept

<u>System Description</u>

JPL Data Center provides fully supported, reliable, and economical database services and products, including commercial database management systems and servers, database storage, and middleware products for database access. The database hosting service is available laboratory wide and significantly reduces the costs, resources, and commitment a project needs for a data management solution.

JPL Data Center also hosts enterprise applications that require integration and support with institutional services and applications that are data-intensive, requiring relational or object database and/or access and management of large scales of data. The Application Hosting Service provides hosting, support and maintenance for applications via hardware, software, mass storage and operational support.

Operational Concept

JPL Operations is the point-of-entry for all hosting services' front-line, day-to-day contact with the customers. JPL Operations will attempt to resolve the call, but if the call can not be resolved, it will be elevated to

- JPL IS System Administration (SA) staff if it is operating system related or
- JPL Data Center hosting service staff if it is a database or COTS or application and system integration related problem.

If the request is application specific, hosting staff will route application-related requests to application-on-call staff. If JPL Operations is providing help desk service for the application, Operations may follow the application operation procedures or route the problem to the application-on-call staff.

JPL IS System Administration handles requests from hosting services or JPL Operations for system health, maintenance, configuration, and upgrade.

JPL Data Center provides Operation Procedures and Web Operations Utilities for JPL Operations to assist customer in verifications, status checking, and distribute server service notification. The Web Operations Utilities can also be used to stop/start COTS servers and in certain case to restart a hung or crashed application using non-interactive authentication and remote command execution.

7.1.11 Production Network Diagram

Figure 32

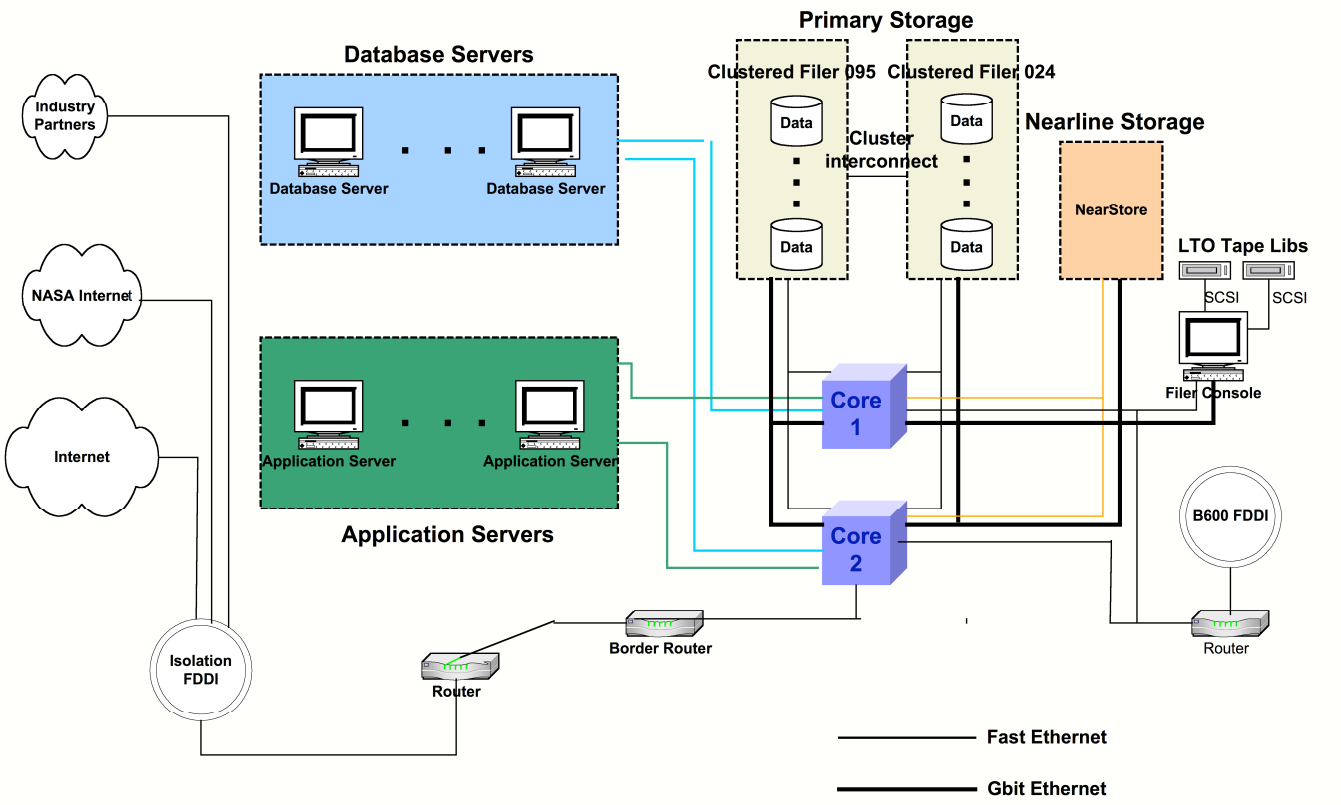

7.1.12 Systems and Support

JPL Data Center systems consist of 9 database servers and 8 application servers, all of which are Sun servers running under the Solaris Operating Environment. For high availability data storage, there are two NAS clustered filers (model 820) and one near-line storage NAS R100, which is being replaced by a model R150.

Systems which hold user-critical data are administered and monitored 24 hours a day, seven days a week, with point-in-time recovery. For non-critical data, support is available during normal office hours.

7.1.13 Facilities

JPL Data Center uses JPL IS server rooms. These facilities include raised floor space, power redundancy and distribution, temperature control, smoke detection and fire suppression systems, and physical security measures and surveillance.

7.1.14 Technology Flashpoints

-Availability of up-to-date test servers.

-Additional servers for failover and OS, COTS upgrade.
-A well defined marketing strategy, a correct forecast of the sales opportunities.

7.1.15 Compliance

-NASA Technical Standards
-Institutional DBAT Policy
-Enterprise Information System Infrastructure Services
-Provide Enterprise Information System Services
-Institutional IT Security Policy
-JPL IS Policies
-ISO/IEC 9075 specifies standards for the Structured Query Language (SQL), the database language, its framework, on-line analytical processing, the call level interface, persistent store modules, host language bindings, management of external data, object language bindings.
-ISO/IEC 9579 for Remote Database Access (RDA) for SQL with security enhancement.

7.1.16 Capabilities

JPL Data Center provides full support in systems and servers for Oracle Enterprise and Standard version RDBMS. The Standard version is designed for users or small groups that require limited system resource and space.

Technologies for database hosting involved:
-Microsoft's ODBC 3, a superset of the X/Open and ISO CLI standards
-Oracle Server administration
-Oracle Names Server administration,
-Oracle Structured Query Language (SQL) functionalities, and Oracle network management.
-Oracle advanced security capability of the Oracle network products .
-Oracle application design and implementation.
-Sun's Java language for implementation of database stored procedures and triggers.
-Sun's JDBC 3,4, Java dataBase connectivity standard application program interface (API)
-ERWIN, Oracle Designer, for data modeling

JPL Data Center currently supports Solaris OS platform. Solaris Application Hosting Service also provides consulting on hardware procurement/leasing, COTS, middleware related installations, upgrades, data/database migration, and service integration.

Supported Operating System in application hosting:
-JumpStart Solaris 7 version 3.1
-JumpStart Solaris 8 version js_2002c

Samples of supported packages in application hosting
-AFS Client Version 3.4
-Apache Http Server, Version 1.3, 2.0
-CVS

-CCC/Harvest
-Oracle Designer
-Oracle Developer Suite
-Gnu C/C++ 2.95.2
-Gnu EMACS v21.1
-iPlanet Web Server 6.0 (Sun One)
-JDBC 3.0, 4.0
-Netscape Enterprise Server Version 4
-Network Appliance NAS Server Version 6
-Oracle 9 Software
-Oracle Call Interface (OCI)
-Perl Version 4, 5
-SSH 1.3, 1.5
-Sun Java Development Kit (JDK) 1.2.2
-Sun Java Servlet Server (JSDK) 1.3
-SUDO 1.6.3
-Visual Cafe
-Webspheres

For backup and recovery of files on mass storage, JPL Data Center schedules on-line snap shots on clustered NAS filers for recovery of accidentally changed or removed file(s). Active file system is not duplicated in scheduled snap shots unless file is modified or removed. System administrators use snap shots to create backups safely from a running system. Data on NAS filers are backed up hourly onto the near-line storage. Except the initial full backup, only data blocks that have changed are transferred to the near-line storage.

7.1.17 To Be Condition

-R150 12TB of near-line storage
-Other RDMS database hosting service(s)
-High available servers

7.1.18 References

http://dta.jpl.nasa.gov
http://ahs.jpl.nasa.gov

7.2 Communications Segment

7.2.1 Voice Component

All elements that provide voice services to users including hardware, software, services and communications that are not provided by NASA WANs

- Local telephone service is SBC Centrex provided under the State of California CALNET contract
- Domestic and international long distance service is provided through FTS
- Voice mail is provided by SBC using the State of California CALNET contract
- ACDs and call routers use SBC Centrex based services
- ACD management functions are provided using Nortel's Call Center Management Information System (CCMIS)
- 800 number services are provided through FTS
- Calling card services are provided through FTS
- Facsimile equipment is purchased by JPL
- Teleconferencing services are provided using FTS VoTS and meet-me lines
- Data conferencing/teleconferencing services are provided using Latitude MeetingPlace
- JPL operator services are provided by SBC
- Cell phone service is primarily provided by Cingular using a GSA contract
- Other cell phone service providers are used as project and user requirements dictate
- Satellite phone service providers include the Department of Defense and Globalstar

7.2.2 Introduction

JPL's telephone infrastructure is primarily owned and operated by commercial service providers. JPL uses SBC Centrex service to connect to the Public Switched Telephone Network and connects to MCI's FTS network for long distance services. JPL wireless phone services use commercial service providers.

JPL also uses FTS 800 number services and calling cards and some teleconferencing uses FTS VoTS. JPL does have its own data conferencing/teleconferencing system, Latitude MeetingPlace, which is described in the Messaging and Collaboration Component.

Call center functions are provided using Centrex based ACD services. ACD management functions are provided using the Nortel Call Center Management Information Management System (CCMIS). CCMIS is a server based function and the equipment is owned by JPL.

7.2.3 As is Condition

JPL telephone services are primarily central office based and therefore it is the service provider's responsibility to maintain the infrastructure, insure equipment is reliable, software is maintained at current revision levels and repair failing equipment.

JPL uses SBC Centrex, a set of central office based services, to support local telephone service and ACD services. JPL also uses SBC central office based voice mail. Long distance and 800 number services are provided by FTS. Wireless phone service infrastructure is provided by commercial service providers. None of these services are provided using any JPL purchased equipment.

Telephones and cell phones are generally purchased by JPL. JPL continually replaces this equipment when it reaches the end of it useful life.

The Latitude MeetingPlace data conferencing/teleconferencing equipment is described in more detail in the Messaging and Collaboration Component .

The CCMIS server is owned by JPL. The server is adequate for the current needs, however, it is several years old and there are additional features available with newer software versions and other products. A server software upgrade or a replacement with a new system is currently being evaluated.

7.2.4 Systems Description and Operational Concept

JPL landline telephone system is central office based and is owned and operated by SBC. Telephones connect directly to a Nortel DMS100 Supernode Switch located in SBC's LACNCA11 Central Office, which is located adjacent to the JPL campus. The switch supports a combination of analog, Electronic Business Set and ISDN phones. The DMS100 connects to other SBC central offices and also connects to MCI facilities to provide long distance services via FTS. JPL also uses tie-lines to connect to Caltech, and the Deep Space Network Stations at Goldstone, Canberra and Madrid.

JPL's voice mail system is also central office based, owned and operated by SBC. The equipment is located in SBC Green Street Central Office, PSDNCA11, and connects to the LACNCA11 DMS100. The system supports 96 simultaneous connections.

JPL has several 800 numbers for supporting such services as access to voice mail and for use in calling JPL extensions when personnel are away from JPL. This service is provided using FTS.

JPL provides FTS calling cards to personnel that are required to place business calls when away from the Lab.

JPL supports several call routers and ACD capabilities using central office based services. Call center management is performed using Nortel's Call Center Management Information System product. This is a server-based product owned by JPL.

Voice conferencing is supported using FTS VoTS, Latitude MeetingPlace and meet-me lines. MeetingPlace not only provides voice conferencing but also data conferencing services. This service is described in more detail in the Messaging and Collaboration Component. Meet-me lines are a central office based service that allow up to 30 participants in a single conference.

Cingular is JPL's primary cellular phone service provider. However, JPL has agreements with all of the other major service providers so that projects that require the use of other provider's service can be accommodated.

7.2.5 Production Network Diagram

Figure 33

[redacted]

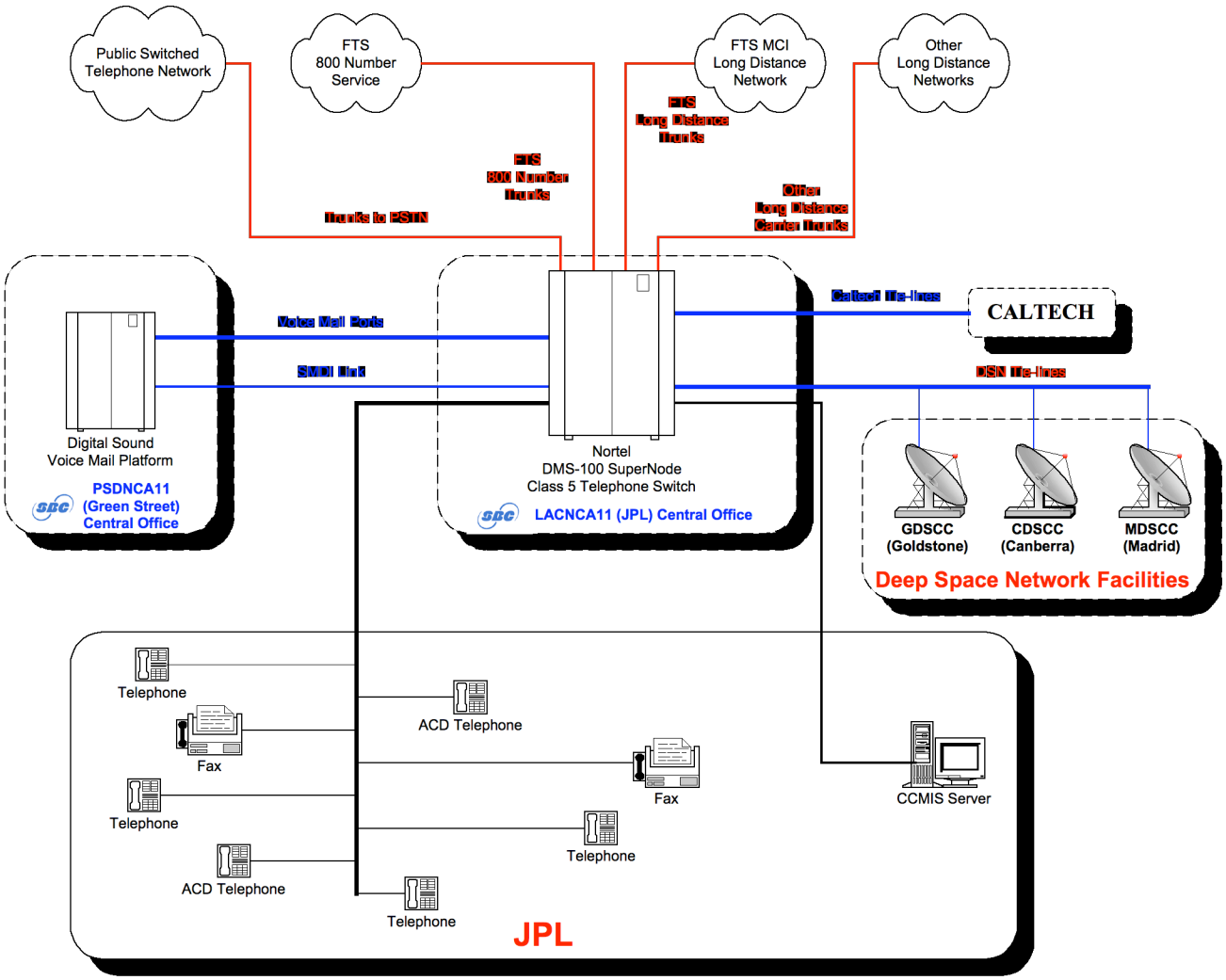

[redacted]

7.2.6 Systems and Support

JPL has minimal internal support requirements. The primary support functions are oversight of service providers and contractors. JPL personnel also handle planning and the engineering of new telephony based services.

Telephone services are central office based with support provided by the respective service providers. Other functions are outsourced as part of JPL Institutional Services and Support (ISAS) IT support contract. Local phone service and ACD service are Centrex based and is supported by SBC. Long distance service, 800 number services and calling cards are provided by FTS. Voice mail is SBC central office based. Cellular services are provided by the

respective cellular service provider. Telephone administration and operator services are outsourced to SBC and as part of JPL IT services contract.

Latitude MeetingPlace and CCMIS sustaining engineering are supported by less than 0.1 JPL FTE. Operations support is provided as part of the ISAS contract.

7.2.7 Facilities

JPL landline voice services are primarily central office based and therefore require minimal facilities. JPL provides backboard space for cable termination and cross-connects. The backboards are typically collocated in rooms with other utilities or network hubrooms and therefore do not require dedicated space. JPL's connection to the FTS network is five T-1 circuits connecting the LACNCA11 central office to MCI facilities and therefore there are no JPL facilities required. Cellular phone services do not require any JPL facilities.

Telephone installation and maintenance, telephone administration and support and operator services are outsourced and do not require any dedicated JPL facilities. Because the telephone support personnel are located off site, there is an area at JPL with a desk, computer and telephone that they can use to update service requests and trouble tickets, check e-mail and make phone calls without having to return to the ISAS contractor's facility.

The CCMIS server is a single PC and housed in a server room along with IT services servers. The Latitude MeetingPlace server is discussed in the Collaboration Section.

7.2.8 Technology Flashpoints

No single cell phone service provider has ubiquitous cell phone coverage. Not all vendors have coverage on the JPL campus and even the best coverage has some holes. This necessitates working with multiple vendors to provide users with cell phones that best meet their coverage requirements.

Other flashpoints are the state of technology for Voice over IP, Unified Messaging/Communications and cellular based data services. These technologies are beginning to emerge and should be very useful when more mature.

7.2.9 Compliance

To the best of our knowledge JPL is in compliance with all NASA and Federal regulations.

7.2.10 Capabilities

JPL uses central office based telephony services. Centrex service provides hundreds of features, many of which are rarely used. CLASS services provide advanced capabilities on analog phones. The ACD services support extensive call trees and custom programming capability for

advanced call center functions. The JPL voice mail system provides the standard voice mail functions of send, receive, reply and forward as well as the ability of manage group lists, have alternate greeting, alternate mailboxes. CCMIS provides management information reporting to analyze call center workload and agent productivity as well as electronic display boards that allow everyone in the call center the ability to see the status of agents and calling queues.

7.2.11 To Be Condition

Voice over IP is being evaluated to replace all or part of the Centrex based landline telephone service.

Unified Messaging/Communications capabilities are being evaluated to replace and augment the existing voice mail service.

Cellular based data services are being evaluated to provide personnel away from JPL with access to the Internet and the JPL network including their JPL e-mail.

There are discussions with vendors to provide better cell phone coverage on the JPL campus.

7.3 Electronic Work Environment Segment

7.3.1 Messaging and Collaboration Component

7.3.1.1 E-mail

Email: services to transport (moving messages), store and retrieve electronic mail using Internet standardized protocols.

7.3.2 As is Condition

Mailhub (mailhub.jpl.nasa.gov):
HW: Sun E450 (4 proc, 300MHz)
SW: Mail*Hub 2000

Client SMTP (smtp.jpl.nasa.gov):
HW: Sun Ultra-2200
SW: Sendmail 8.12.9

Client POP/IMAP Proxy (mmp.jpl.nasa.gov):
HW: Sun Fire 280R (2 proc, 900MHz)

SW: Sendmail 8.12.9
iPlanet Messaging Server - MMP component only

Email Account Directory (email.jpl.nasa.gov, dir4.jpl.nasa.gov):
HW: Sun E450 (4 proc, 300MHz)
SW: Netscape Directory Server 3.11
Netscape Messaging Server 3.6
Netscape Enterprise Server 3.5.1
HW: Sun Fire 280R (2 proc, 900MHz)
SW: iPlanet Directory Server 5.1

Email Account Server (POP/IMAP) (mailhost4.jpl.nasa.gov):
HW: Sun Fire 280R (2 proc, 900MHz)
Sun StorEdge T3
SW: iPlanet Messaging Server 5.2

7.3.3 Systems description and Operational Concept

A multi-user, Internet standards-based, electronic messaging transport and storage system, which allows electronic messages to be sent and received in and out of the Jet Propulsion Laboratory (JPL) network.

The functions of sending and receiving email at JPL represent two of the major components of the JPL Email System. There are multiple additional components of the email system, which enhance the smooth flow of email. The email system utilizes two separate paths for the transfer of email. Users access one path when checking for incoming mail. An SMTP (Simple Mail Transfer Protocol) component provides users with a separate path for sending out email within JPL and the Internet.

Email sent by a JPL user falls into three general categories, email going to a non-JPL address, email going to a JPL address using a canonical address, and email going to a JPL address using a host name. The SMTP Server verifies the accuracy of the domain address through the DNS (Domain Name Server) and, if the domain address is validated, the email is sent to its destination.

Email addressed in a format of 'fnam.lnam@jpl.nasa.gov' is using a canonical email address. Canonical addresses consist of two items separated by an '@' sign. To the left of the '@' sign is addressee information consisting of a
first name, a period, an optional middle initial and period, and a last name. The 'location' or 'domain', i.e. where the addressee can be found, is to the right of the '@' sign. The 'location' or 'domain' at JPL is 'jpl.nasa.gov'. The complete canonical email address is the address that should be used as a return address by all individuals using the JPL email system. This address should be the address used on business cards and stationary. This canonical address is valid for as long as the addressee maintains a relationship with JPL.

When email is sent to a canonical address, the email goes from an SMTP Server to a component

of the email system known as the Mailhub and X.500 Directory Server. At the Mailhub, address resolution takes place; specifically each canonical email address is mapped to a specific preferred or primary address to which the email is to be sent. Said differently, each email account at JPL can be referenced at least two different ways: one is via the canonical address and one is via the actual or preferred address.

There is a set of host names which are used to identify the various components upon which the email is stored. Specifically, mail, mailhost1, mailhost2, and mailhost4 are all host names that result in the email being stored on the
mailhost1 mailbox component. Using mailhost2 as a host name will result in email being sent to the mailhost2 mailbox component. Using mailhost4 as a host name will result in email being sent to the mailhost4 mailbox component. Email that is to be delivered to JPL accounts is stored at a mailbox until the appropriate user requests or checks his/her email.

If email is sent to a JPL email address using a host name (i.e. mail, mailhost1, mailhost2, etc.), once the email arrives at the appropriate mailbox component, that server will check with the email account directory to confirm
that it should hold on to the email it has just received. If, for example, a message is sent to ?@mailhost1.jpl.nasa.gov, but the user has his/her primary account on mailhost2, the email account directory will notify the mailhost1 mailbox to transfer the just received message to the mailhost2 mailbox.

Figure 34

EIS MESSAGING SERVICE: E-MAIL SYSTEM ARCHITECTURE

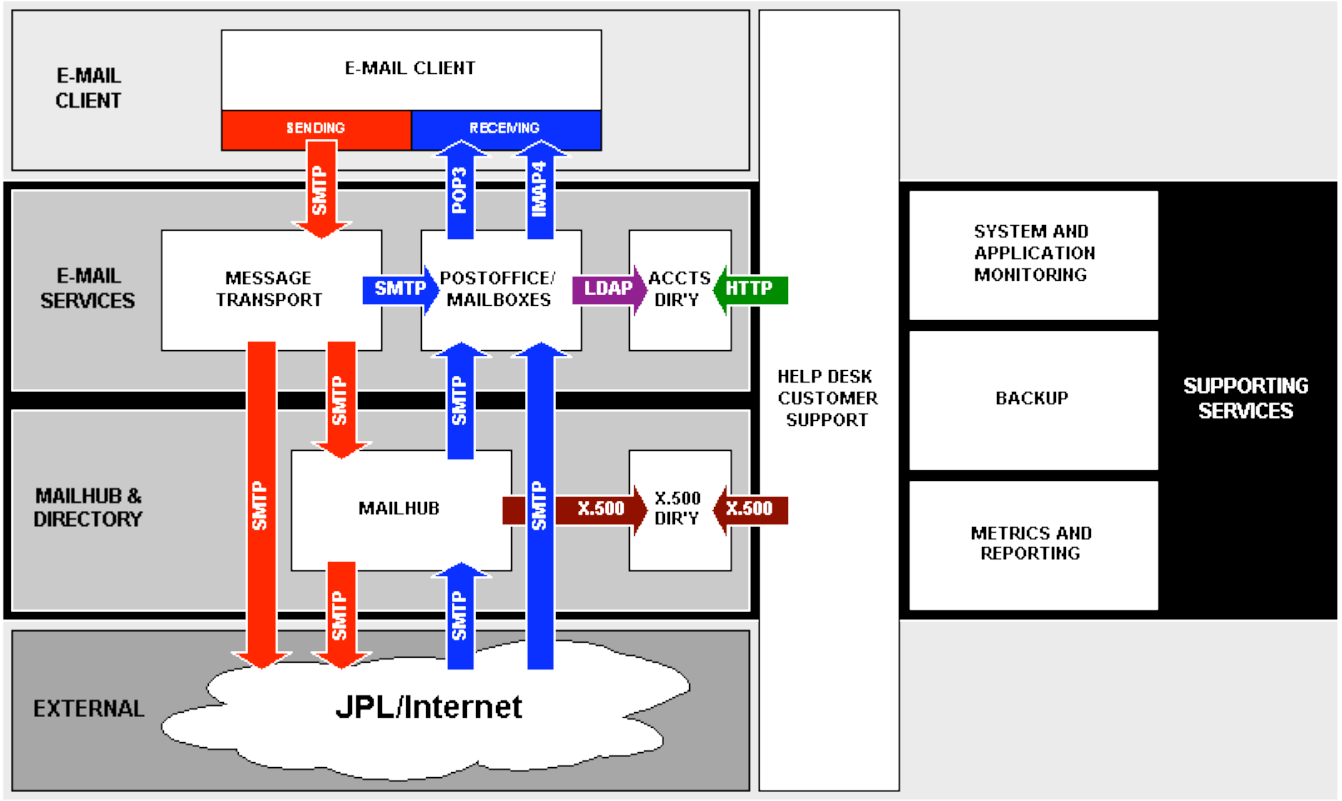

7.3.4 Production Network Diagram

Figure 35

JPL MESSAGING: OPERATIONAL SYSTEMS

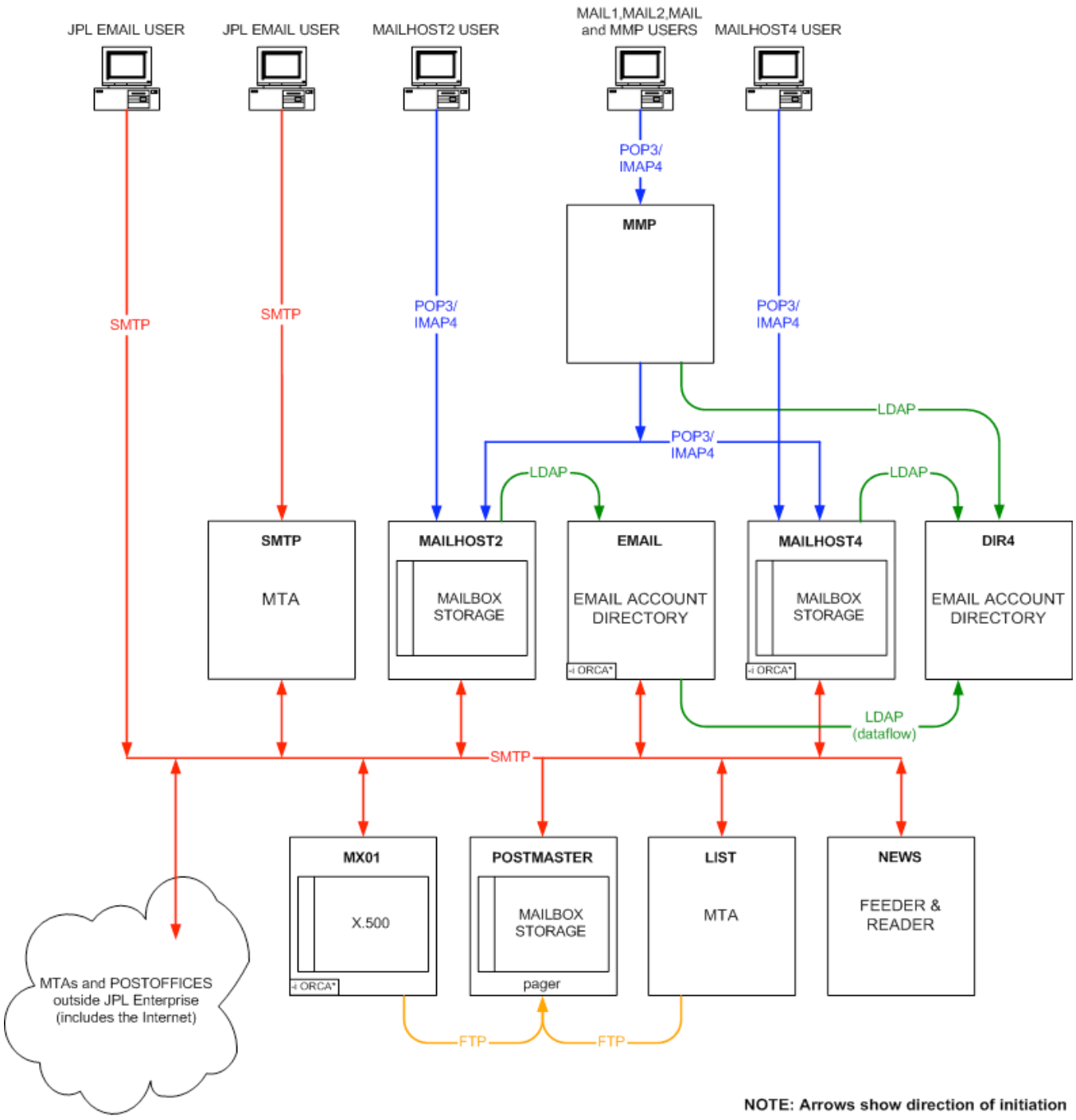

7.3.5 Facilities

Controlled space dedicated to the operation of JPL and EIS mission critical systems. (There is currently no reference document covering the operational nature of this facility.)

Physical Security: Double card reader access controls are in place. The first tier is located at the door to the controlled space and the second inside the space at the entrance to the high-security area. There is no video
surveillance. The room is un-manned.

Power: Provided by JPL facilities. All equipment in this facility is provided power through intermediary power distribution units (PDU) that condition the power supply. This room also has a Un-interruptible Power Supply (UPS) for the equipment ONLY. Air conditioning is not connected to the UPS.

Air Conditioning: Provided by two sources. JPL (Jacobs) Facilities Maintenance and separately purchased Air Conditioning Units (ACU). Specifications are not available at this time. There are 2 ACUs in the main server room and one in the high-security area.

Fire Suppression: provided by existing JPL fire suppression systems.

7.3.6 Technology Flashpoints

None at this time.

7.3.7 Compliance

The following standards are used by JPL's EMAIL Service

TABLE 26

NASA Technical Standards from http://standards.nasa.gov/			
Doc Number/Date	**Name**	**Purpose**	**Comments**
NASA-STD-2807C 2001-09	The NASA Directory Service Architecture, Standards, and Products	Addresses all aspects of directory services involving mission-related, general-purpose, research, administrative and scientific computing and networking throughout the NASA Agency.	Sets out how other NASA centers expect email addressing to look.
NASA-STD-2808A 1998-01	Interoperability Profile for NASA Email Clients	Defines the list of E-mail interoperability interface requirements for the Agency wide electronic mail system.	
NASA-STD-2812 1997-05	Intranet Functional Requirements	Identifies some current intranet activities within NASA and defines functional requirements for the architecture of an intranet or intranets for NASA.	

NASA-STD-2815 1998-08	NASA Electronic Messaging Architecture, Standards and Products	Defines architecture for the design, implementation and operation of Electronic Messaging for NASA.

JPL Calendar Service

Personal calendar management and the need for interpersonal schedule coordination has become an important aspect of daily life at the Jet Propulsion Laboratory. With the growing need to manage the 'sociotemporal' strata of the workplace model, the Calendar Service has become the 'de facto' tool for enterprise time management at JPL.

7.3.8 As is Condition

The implementation is simple and consists of Meeting Maker application software layered on a fully supported Sun Enterprise class 420R server. It is a relatively low-maintenance, high availability system, deployed as a part of the JPL Information System whose engineering lifecycle was created to provide world-class service to the JPL user community.

Prior to becoming a JPL Infrastructure Service, the Calendar was hosted on six (6) Apple Macintosh servers running as many instances of Meeting Maker 5.x software and supported by the OAO Alliance. Upon transition to JPL IS in 2001, the service was re-hosted to a single Sun/Solaris system, upgraded to Meeting Maker version 6.0.8 and re-configured to run four (4) instances of the software.

The current operational version of the Meeting Maker Application software is 7.5. During the upgrade from 6.0.8 to 7.2.1 JPL experienced significant degradation in user 'busytime' queries. Meeting Maker, Inc. was able to address most of the performance issues, however, users still intermittently experience query time from 6 to 25 seconds.

7.3.9 System Description and Operational Concept

As mentioned earlier, the JPL Calendar Service is comprised primarily of the capability set of Meeting Maker, Inc.'s Meeting Maker® software. It is a network group-scheduling tool that lets users maintain personal calendars and arrange meetings with other Meeting Maker users. It is a *cross-platform* application with a client that runs on Windows 98, NT, 2000, Macintosh 9 and 10 and Solaris. Meeting Maker® works similarly on all platforms, and the interface is virtually identical.

Operational Use Cases:
Case #1 Activity Tracking: User creates activity objects within the client to keep track of the date, time, location and other pertinent details of the activity. User then has a record and is reminded about said activity via client, email or PDA. Activities can be scheduled as recurring.

Case #2 Meeting Coordination: User creates a meeting object within the client to keep track of the date, time, location and other pertinent details of a meeting. As the user creates the meeting, the user can invite other service subscribers or non-service subscribers (via email) and can also schedule resources such as conference rooms and projection equipment. All invitees and resource managers have a record and are reminded about said meeting via client, email or PDA. Meetings can be scheduled as recurring. Users have embedded contact management tools to invite and track all service subscribers and user added, non-subscribed users.

Case #3 Resource Management: A resource manager can accept, decline or reschedule meetings proposed for that specific resource. Shared resources can be managed to allow for maximum return on investment and prevent double booking. Resources might include public conference rooms or other non-fixed assets such as laboratory equipment.

Case #4 Proxy Management: A proxy manager can propose, accept, decline or reschedule meetings on behalf of another service subscriber. One example might include a Project coordinator inviting the entire Project Staff on behalf of the Project Manager.

Case #5 Remote Access/Off-Line mode: A user is using a laptop from a remote location. The user can schedule meetings, create activities and work within the application in an off-line mode. Once a network connection has been re-established, the user's work (proposals) is uploaded.

Figure 36: High Level Service Diagram

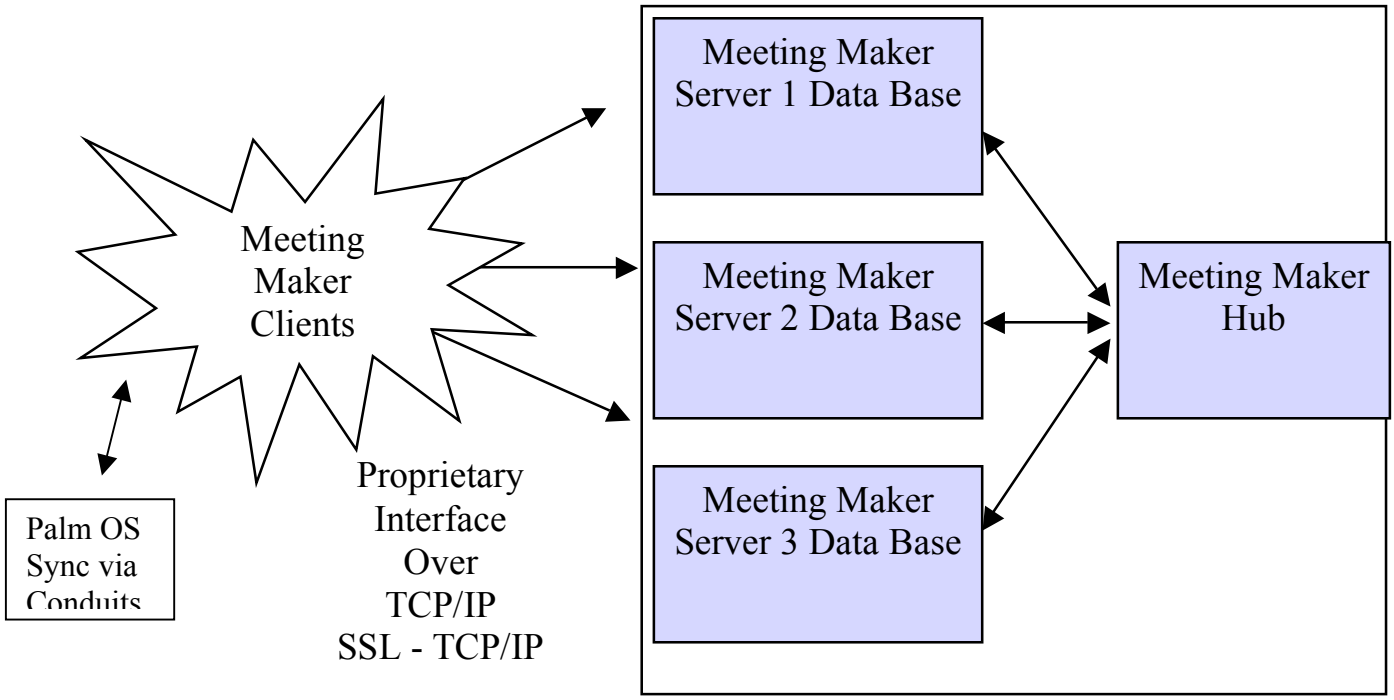

7.3.10 Production Network Diagram

Figure 37, Sun 420R

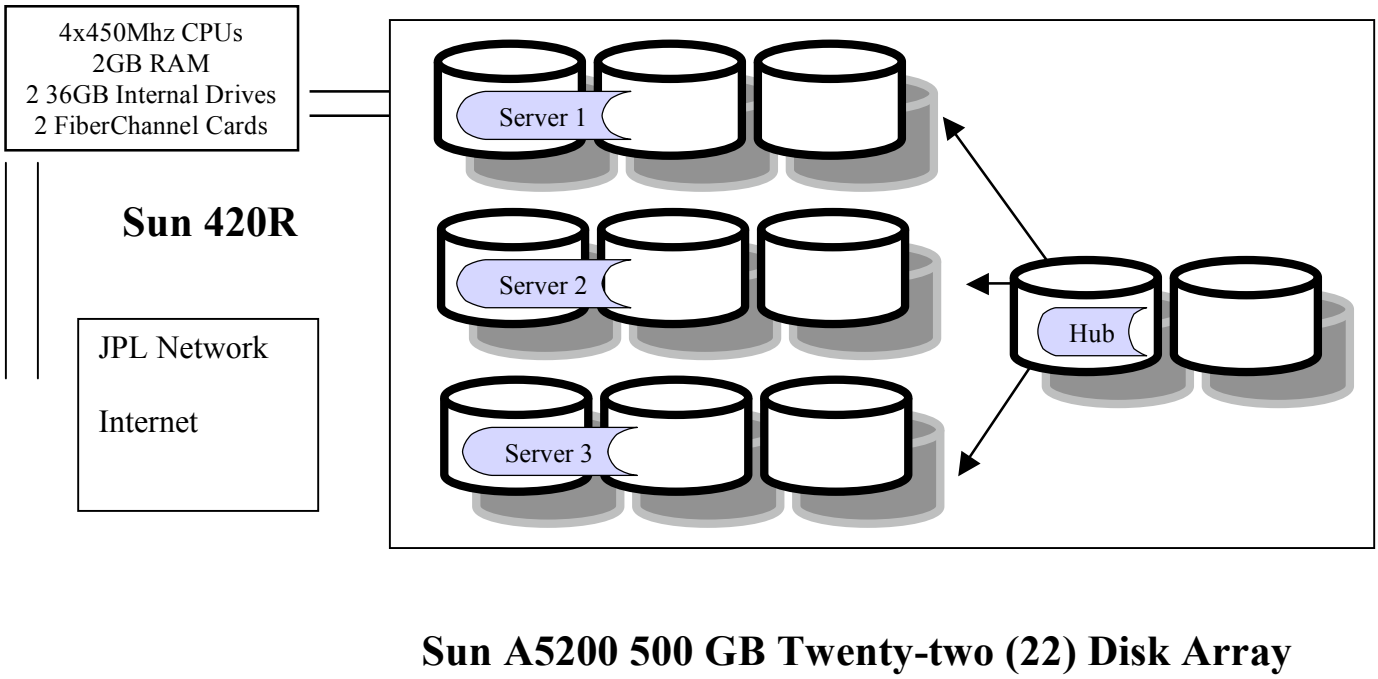

7.3.11 Systems and Support

In addition to the functional aspects of the JPL Calendar Service, it is also part of a larger service organization, namely the JPL Information Systems (JPLIS) Office. The JPL Calendar Service has support considerations that reach far beyond application functionality. Infrastructure services provide the following support to the Calendar Service in varying degrees.

Sustaining Engineering:
Hardware Sizing and Lifecycle
Operating System (OS) Support
OS Configuration Analysis, Performance Tuning and Lifecycle
System, Infrastructure Component and Meeting Maker Application Controls

Operational Monitoring and Collection
Operational Monitors (Alerts)
Service Transaction Monitors (Dials)
System Component Level Metrics Data
MeetingMaker Service Transaction Level Metrics Data
Metrics Data Correlation and Display

Service Interfaces
JPL Network Service
JPL Directory Service
JPL Web Service
JPL Messaging Service
JPL File Service (AFS)
UCS Chargeback Interface
Operations Metrics Displays
Backup
Tivoli Alert Service (SMN)

Operations and Administration
User Administration
Service Administration
Trouble Diagnosis
Sustaining Engineering
Remedy Workflow Management Service

Security
Secure communications
Authentication
Remote Access and Control

Configuration Management

Backup, Restore and Archival
Disaster Recovery Plan
Data Backup and Restore Plans
Backup Specifications
Archival Plan

User Outreach
Documentation
ICIS Web Pages
Outreach Tools
Training

Financial Systems
Business Models and Budgets
UCS Reporting and Collections

7.3.12 Facilities

The JPL Calendar Service Hardware is located in 230-B20. This room is in a controlled building dedicated to the operation of JPL mission critical systems.

Double card reader access controls are in place. The first tier is located at the door to the building and the second inside the building at the entrance to the controlled server room space.

There is no video surveillance. The room is un-manned

Power is provided by JPL facilities. All equipment in this facility is connected to the power infrastructure through intermediary power distribution units (PDU) that condition the power supply(s). This building also has power backup capabilities provided by building generators designed to failover in the event of a power loss.

Fire Suppression is provided by existing, water-based, JPL fire suppression systems.

7.3.13 Technology Flash Points

-Microsoft PDA Synchronization*
-LDAP Authentication
-Full HTML Client*
-Near-real-time user busytime queries*
-ACLs on Shared Accounts
-Group Management
-API access to Data structures (integrate with other apps)*
-Remote site integration or communication

*Features answered by deployment of existing, new or future product add-ons.

7.3.14 Compliance

Compliant with NASA and Federal regulations to the best of our knowledge.

7.3.15 Capabilities

Plan and schedule meetings
Send invitations, reserve meeting rooms and equipment (like slide projectors, VCRs, etc.) and schedule recurring meetings. Meetingmaker's Auto-Pick feature finds the earliest time that all required guests can attend your meeting.
Organize your personal calendar
Organize your personal calendar and keep other Meetingmaker users aware of your availability for meetings. Meetingmaker also reminds you of upcoming meetings and activities.
Let someone else keep track of your calendar
Assign a proxy to arrange your meetings, answer your messages, and schedule your activities. You can control whether the proxy can read or update your calendar, and whether or not the proxy sees descriptions of your activities or to-do items. Note: Proxies are people you assign to help manage your calendar (such as a secretary or supervisor).
Maintain a list of tasks

Use the To-Do List to organize and prioritize important tasks. You can also assign to-do tasks to other people who are part of your Meetingmaker environment.
Print your schedule
Print your schedule in sizes to fit your choice of popular personal organizers, including Day-Timer®, Day Runner®, Franklin Day Planner, and Dynodex.
Take your calendar with you
You can use your Meetingmaker calendar even when not connected to the network by working "offline."
Synchronize your calendar with a handheld device
You can synchronize your Meetingmaker calendar with Palm OS platform handheld devices, such as those made by Palm and Handspring.

7.3.16 To Be Condition

Budget and planning activities for FY04 are currently underway at JPL. The future of the JPL Calendar Service in its current form is one of many discussion points. Aside from deployment of smaller feature enhancements such as Web displays and PocketPC interface software, there are 2 additional, far-reaching directions that are currently under consideration.

Meeting Maker Capability Enhancement
Meeting Maker, Inc. provides a product suite (Web Services) that allows an XML/SOAP interface to the underlying calendar database. Desire has been expressed to provide Project calendar channels and a 'MyCalendar' channel in the JPL portal. This would be an example of the capability and a target application once this toolkit is deployed at JPL.

Transition to Oracle® Corporate Time
As mentioned earlier, the Meeting Maker upgrade from version 6.0.8 to 7.2.1 exposed significant performance issues. Since that time the Meeting Maker software has been upgraded to 7.5 and while the problems are not acute, there is some indication that Meeting Maker may not be as scalable as required in its current state. During the crisis level activities, JPL undertook a task to perform a cursory evaluation of other calendaring products. Corporate Time distinguished itself as a front-runner for conversion. JPL may revisit this task again in the coming FY.

7.3.17 Referenced Documents

Meeting Maker Documentation:
http://connect.meetingmaker.com/support/docs/documentation.cfm

<u>Document Management</u>

The Electronic Library Service at JPL assists projects, line organizations, business management organizations, and other work groups to establish and maintain electronic libraries in accordance with JPL requirements and best document management practices.

The service supports approximately 155 unique libraries, supporting 6000 users, 4000 of which are potential contributors. Most of these libraries are used as a central repository for sharing and storing documents and other types of files. Metadata is associated with each file. There are revision management and check-in/check-out features. Users can browse through a hierarchical folder view to find documents. Users can search metadata and text. There is a user subscription feature. There is a capability to save searches. There is a capability to automatically convert common file formats to HTML for on-line viewing.

7.3.18 As is Condition

The service is currently staffed with the following positions: Service Engineer, Team Lead, System Engineer, ELS Administrator, ELS Developer, System Administrator, Trainer, and Help Desk support. The service is operational. The ELS team supports day-to-operations and library maintenance, as well as researching and developing new tools and capabilities.

The Electronic Library Service provides the following services:

- A high-performance Unix-based architecture for reliable Web-server access and data storage including:
    - Primary and failover Sun Solaris servers
    - Netscape Web Server with SSL option
    - Network Attached Storage (NAS) devices with mirroring
    - Backup and recovery
    - JPL/NASA server level security
    - 24/7 operations and system monitoring
- A Web-based document management system application – DocuShare 2.2
    - Application installation, configuration, and optimization
    - On-going maintenance and upgrades
- Emergency technical support
- Customer support line – customers and library end-users can use 4-EIS1 to request help.
- Training and on-going consultation
- On-call emergency system administration
- Best practice and compliance recommendations

7.3.19 Systems description and Operational Concept

The Electronic Library Service serves the JPL community and also relies upon JPL Information Services as illustrated in the Figure 38.

Figure 38

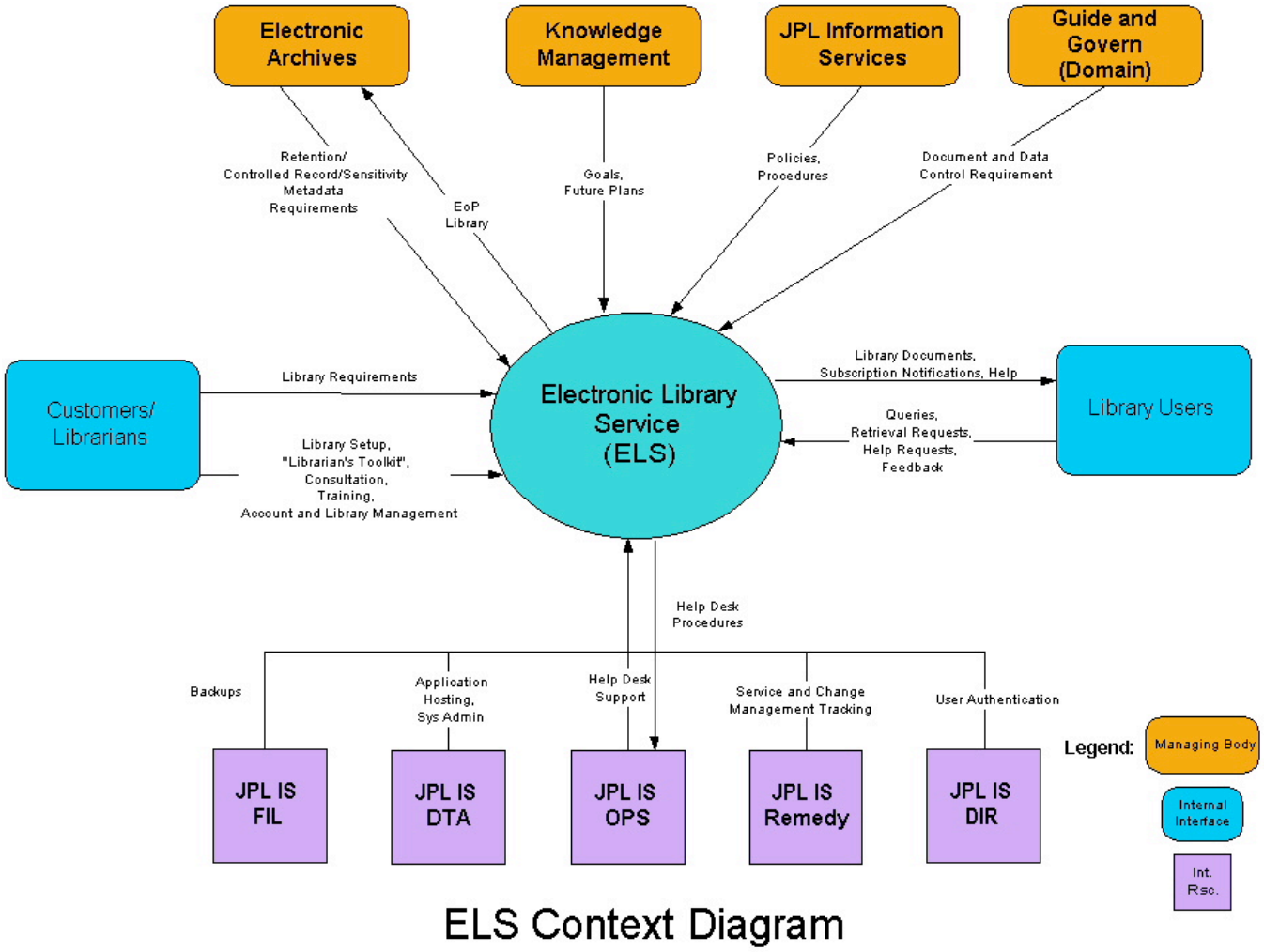

ELS Context Diagram

7.3.20 Production Network Diagram

The hardware and software architecture underlying the Electronic Library Service is illustrated in Figure 39.

Figure 39

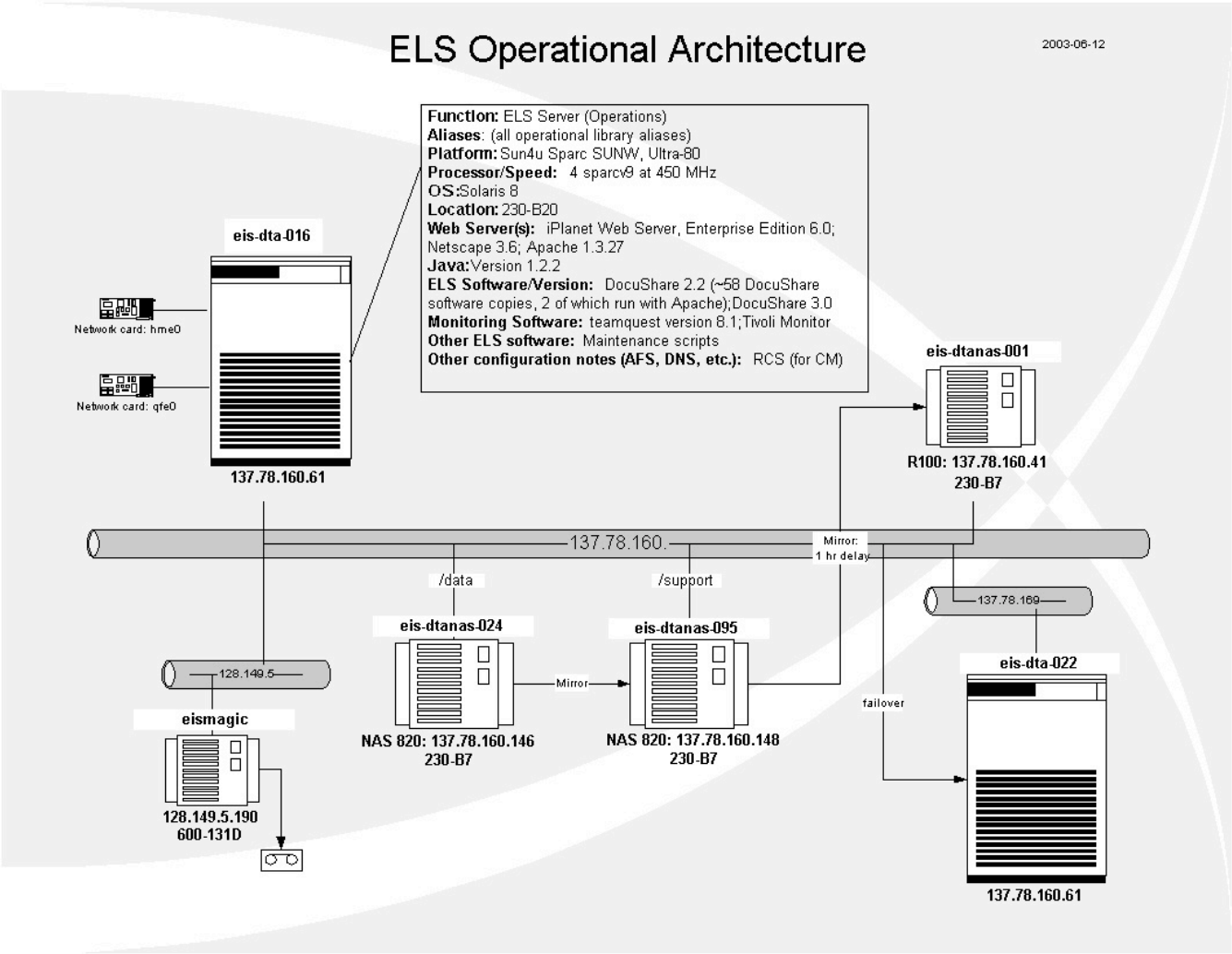

7.3.21 Systems and Support

The operational system for the Electronic Library Service requires high-availability, backup and recovery mechanisms, including off-site storage of backups, a 24x7 help desk, and emergency on-call system administration support. This support is provided to the Electronic Library Service by JPL Information Services. The individual services used are illustrated in Figure 38.

7.3.22 Facilities

The Electronic Library Service is hosted at JPL by JPL Information Services. Primary service and data server machines are located in building 230, the Space Flight Operations Facility, which is a restricted access building with its own backup generators in case of power failures.

7.3.23 Technology Flashpoints

None at this time.

7.3.24 Compliance

The goal of the ELS is to comply with the electronic repository requirements of JPL's Document and Data Control Requirement, and to help projects comply with that document's metadata requirements for projects. The ELS also supports projects in complying with JPL and NASA requirements for controlled records and data retention.

The current tool used by the ELS, DocuShare 2.2, can meet most of these requirements. Plans to upgrade to a more robust product will bring the ELS closer to the goal of providing a product that will completely support a project's compliance requirements.

7.3.25 Capabilities

The current ELS product, DocuShare 2.2, provides the following document management capabilities:

- Persistent document repository
- Complete Web accessibility
- Use of LDAP authentication
- Automated HTML conversion
- Ability to specify required metadata
- Version control
- Check-in/check out
- Individual and group access controls
- Subscription support
- Bulk-loading capabilities
- Sharing of informal documents
- Access to previous versions
- Category hierarchies (folders)
- Bulletin boards
- Calendars

7.3.26 To Be Condition

The ELS is looking forward. The ELS team recognizes its customers' needs for authoring support, work flow and life-cycle management support, compound document support, e-mail storage and management, and content reuse. The ELS realizes that the strengths of XML technology will soon need to be explored at JPL and need to be supported. With this in mind, the Electronic Library Service is planning to upgrade not only its document management tool to meet these needs, but to also expand its services to help customers easily meet NASA, JPL, and project requirements.

MeetingPlace, a WebEx type collaboration tool
As a collaborative tool, JPL makes use of the MeetingPlace voice and data conferencing system. This system currently provides 144 voice ports and 144 data ports for collaboration. The collaborative tools built into MeetingPlace from Latitude include teleconference functionality, a web interface, the ability to share any application from a personal computer and the ability to enable collaboration for connotation from any system participating in the data conference.

7.3.27 As is Condition

The MeetingPlace system configuration at JPL consists of a MeetingPlace proprietary server, a web server for scheduling and data conferencing and a server to provide integration with the corporate LDAP directory. The proprietary MeetingPlace server is the new architecture server, called M3, from Latitude, which provides redundant disk, power and CPU. This architecture also provides the ability to add capacity up to 1152 ports. The new architecture was deployed in April of 2003. The current port configuration is 144 ports using six T-1s.

7.3.28 Systems description and Operational Concept

The MeetingPlace proprietary server has six T-1 lines connected via a supertrunk allowing single number access to the system from inside and outside of JPL. While MeetingPlace is primarily a voice conferencing tool, data conferences are easily attended as part of a voice conference or separately as a collaboration tool. The voice conferencing portion of MeetingPlace provides online scheduling, built in security at various levels, ability to record meetings, and automatic electronic notification to participants. The Windows 2000 server, which is part of the MeetingPlace system, provides the online scheduling capability as well as acts as a data conferencing bridge. Another Windows 2000 server is part of the MeetingPlace system and provides integration with the corporate LDAP directory for MeetingPlace user database maintenance. All JPL and contract employees with a JPL badge number are provided a user profile for the use of MeetingPlace.

The following diagram describes the current MeetingPlace system configuration:

Figure 40

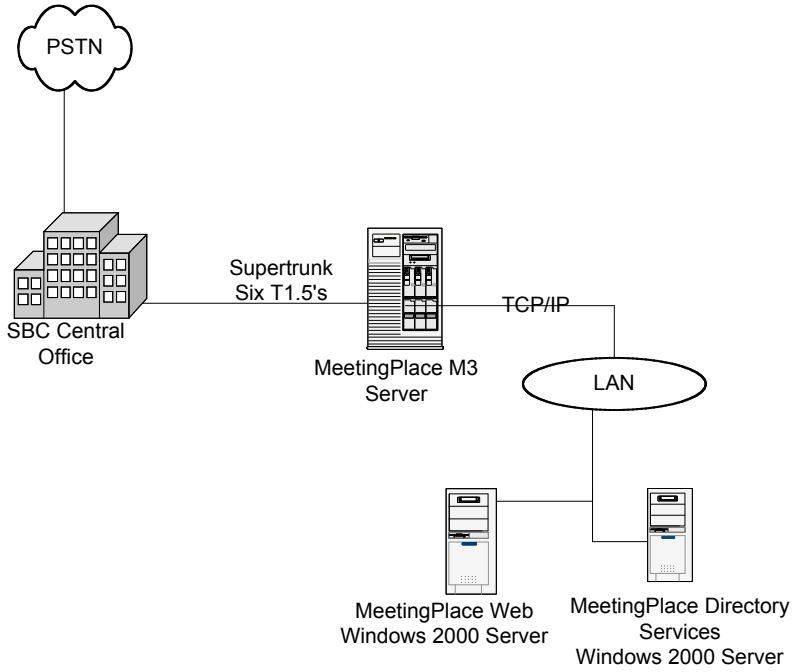

MeetingPlace is administered by the use of a client application called MeetingTime. MeetingTime allows administrators to view what meetings are in progress, how many ports are being used and how many meetings are scheduled for the day, all at a glance. MeetingTime also allows an administrator to schedule special use meetings, end meetings if necessary, and change user profiles (password, system defaults, etc) when needed.

7.3.29 Systems and Support

The current configuration for system and support requirements consists of less than 0.1 FTE of an engineer who plans future upgrades for the MeetingPlace system, system maintenance and some internal marketing and/or user training. Additionally, Latitude Communications provides a customer engineer who assists with major hardware and software upgrades or installation. The user support for MeetingPlace is provided as part of an IT support contract.

7.3.30 Facilities

The service is hosted by JPL Institutional Networks and Telecommunications and is therefore making use of facilities already in use for other institutionally provided services. Networking facilities, rack space and servers are part of the base infrastructure of the JPL network. The T-1 lines are provided by SBC from the local Central Office to JPL via fiber (on a Supertrunk), terminating on copper five feet from the proprietary server.

7.3.31 Technology Flashpoints

The only critical blocking issue associated with the lab wide success of MeetingPlace data conferencing is the inability of the system to support Mac users for sharing their documents. Mac users may view and collaborate with shared documents, however they are unable to share a document themselves.

7.3.32 Compliance

MeetingPlace is compliant with all NASA requirements for security and systems.

7.3.33 Capabilities

MeetingPlace capabilities include:
-Online scheduling
-Meeting recordings
-Automatic emails when participants are included during the scheduling
-Supports attachments during scheduling or during a meeting for participant access
-Security options for meetings (password protected, screened entry of participants)
-Sharing and collaboration of any type of document or application
-Continuous meeting capabilities for impromptu meetings
-Recurring meeting support
-Lecture style meetings for larger groups
-Browser based data conferencing

7.3.34 To Be Condition

The MeetingPlace system will be changing in the near future to make use of a new user interface for data conferencing. The new interface allows the end user to see who has joined their data conference as well as provides the capability to synchronize meeting recording between the voice and the data portions of a conference. This upgrade is planned for the end of this fiscal year and includes the addition of a new server.

The MeetingPlace proprietary server is also continually being monitored for usage and may very likely have ports added as usage increases due to attrition from an older system (Meet Me lines) or simply increased internal marketing.

7.3.35 Public Web Component

JPL home page – provides news, features and multimedia to public

7.3.36 As is Condition

One staging server; 2 round-robin servers; one search engine server

7.3.37 Systems Description and Operational Concept

The round robins systems consist of two Sun Enterprise 220R servers. Each E-220R is equipped with dual, 450MHz Sun UltraSparc II CPU's and 512Mbytes RAM. The staging server is a Sun Ultra-1 which consists of a single 167MHz Sun UltraSparc with 320Mbytes RAM. The search engine also runs on an Ultra-1 system with similar configuration as that on the staging server.

Web Contents - All web contents are first published on the staging server that restricts access only to JPL internal networks. The contents are pushed out to the two round robin servers on a regular basis. No users are allowed to access the round-robin servers.

7.3.38 Production Network Diagram

Figure 41: Network/Functional Flow Diagram

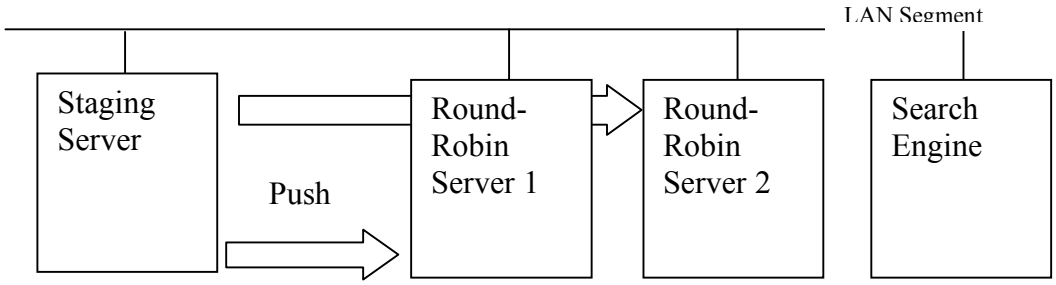

7.3.39 Systems and Support

Systems and Support are complied with NASA ITS requirement.

7.3.40 Facilities

Systems are housed behind access-restricted, secured area. Facility is protected with uninterruptible power supply (UPS) and gas powered generator.

7.3.41 Technology Flashpoints

We would like to give users the choice of more than just RealVideo for streaming capabilities.

7.3.42 Compliance

We make every effort to comply with section 508.

7.3.43 To Be Condition

We may upgrade our servers to prepare for expected increase in Web traffic for 2004 encounters.

8 JOHNSON SPACE CENTER (JSC)

8.1 Computing Services Segment

8.1.1 Desktop Hardware and Software Component

The Johnson Space Center (JSC) is made up of four separate facilities that support the Human Exploration Program for NASA. The facilities are the JSC, Ellington Air Field, Sonny Carter Training Facility, and the White Sands Test Facility. Supporting the JSC is an Institutional Infrastructure that provides services and support by providing services such as e-mail, file storage, and data communications.

8.1.2 As is Condition

This function provides the desktop computing services to the end-user community. Included are all general purpose, desktop computing hardware and software (OS, applications and utilities) components and support services, such as, design, build, operations, support (including help desk), and maintenance services.

8.1.3 Systems description and Operational Concept

As used throughout this document, a “client," "workstation," or "client workstation” may consist of a single computer or an entire network of personal computers connected to a system and used by individuals to access network-host applications and services.
Each client is connected and dependent upon the network of servers acting as host. The host provides client services, to include security, needed for effective communications with other clients on the LAN/MAN or WAN.
IT Security for individual clients is "built" around the multitude of servers (domain name, database, application, web, exchange, etc.) required to host applications and services. All servers have unique operating systems, functions, and security requirements based upon the functionality of the server network requirements and the security requirements outlined in the NPG 2810.1.
Some 10000+ ODIN client workstations are located on Johnson Space Center (JSC), Ellington Field, Sonny Carter Training Facility (SCTF), and 650+ NASA client workstations at White Sands Test Facility. These workstations support administrative and business functions in support of NASA under the ODIN contract.

Client workstations are used only as administrative tools to access office software packages, business applications, and host services. Client workstations support NASA JSC by providing a mechanism to process administrative and business functions.
Standard administrative applications include, but are not limited to: Microsoft Office products such as *Word* (word processor), *Excel* (spreadsheet), *Outlook 2000* (email & calendar), and *PowerPoint* (graphic presentations). Host services as provided to the client include print, email, Internet and shared files/directories.

Client workstations are available 24 hours a day, 7 days a week, if needed.

8.1.4 Production Network Diagram

Figure 42, JSC Institutional Network System

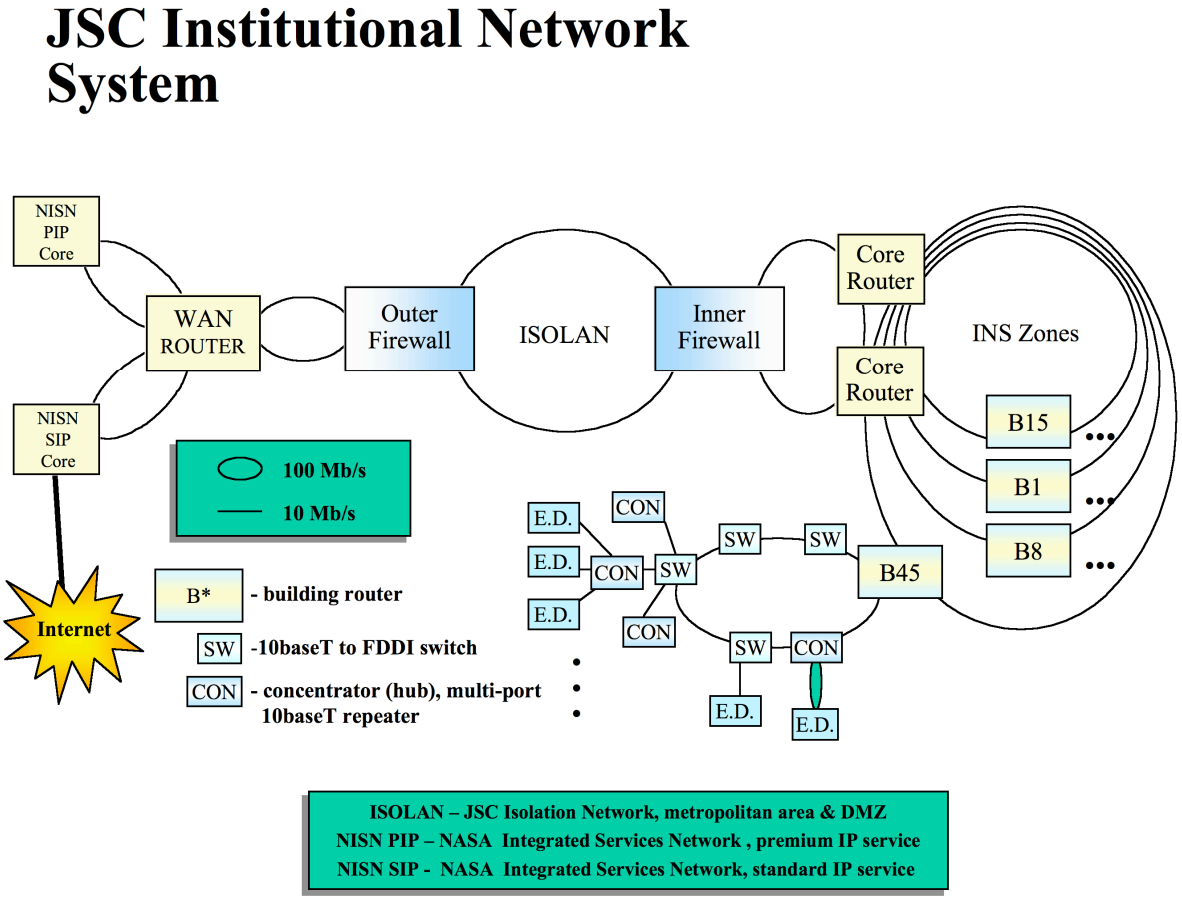

8.1.5 Systems and Support

Existing facilities (computer rooms, training, officer) are used to support the JSC Desktops. JSC provided computer room space and associated needs (e.g., power, security, etc.) to support routers, concentrators, and firewalls.

8.1.6 Technology Flashpoints

None.

8.1.7 Compliance

The JSC Desktops complies with the policy and guidelines of the NASA and the JSC IT Strategic Plan and Security documents (NPG2810 and JPG 2810). The use of COTS packages and a commitment to industry standards promotes interoperability and flexibility in choosing vendors. Leveraging existing infrastructures as much as possible promotes resource sharing.

8.1.8 Capabilities

The JSC desktop-computing services provided to users includes all general purpose, desktop computing hardware and software (OS, applications and utilities) components and services (including design, build, operations, support (including help desk), and maintenance services).

8.1.9 To Be Condition

The to-be condition will be similar to the as-is. The exceptions will be that the desktops will have greater CPU power, more features, such as CD writers, DVD writers, and flat panel plasma monitors. It is likely that the user will be more mobile than today, so wireless systems and docking station desktops will become more widespread. Desktop video conferencing is also on the horizon. Implementation of Windows XP and Office XP.

8.1.10 Application Services Component

The Johnson Space Center (JSC) is made up of four separate facilities that support the Human Exploration Program for NASA. The facilities are the JSC, Ellington Air Field, Sonny Carter Training Facility, and the White Sands Test Facility. Supporting the JSC is an Institutional Infrastructure that provides services and support such as e-mail, file storage, and data communications. The Local Area Network, or JSC Institutional Network, is the institutional network backbone for the JSC.

8.1.11 As is Condition

The Information Systems Directorate (ISD) provides software development and software technology support services to the JSC Programs and Institution for the development and sustaining engineering of world-wide-web (WWW) based application systems. The scope of development support ranges from general-purpose web applications that provide access to user managed content, to full-featured transaction processing and workflow management systems. In addition, individual organizations develop and maintain organizational web systems and applications. Technology upgrades, noted below, are underway to ensure the continued viability of the associated hardware platforms and COTS environments.

8.1.12 Systems Description and Operational Concept

The Application System consists of all applications, IT resources and maintenance items, which have been created by ISD, ISD contractors and organizations for use within the JSC customer community, and includes:

- Organizational and Institutional Web Applications Servers
- Organizational Web Systems
- JSC Document Systems
- Design and Data Management System (DDMS)
- ISD Customer Service System (CSS)
- Collaborative Computing (Bldg 1/room 945)
- Consolidated Storage Management
- Knowledge Management and Help Desk
- Corrective Action Systems
- User Information System (UIS)
- Shuttle Interagency Debris Database (SIDD)
- JSC Public Key Infrastructure (PKI)
- Correspondence Management System (CMS)
- STI Center Web System
- JSC Historical Systems
- JSC Forms System
- JSC Emergency Notification System (JENS)
- Search – Center wide search engine interfaces with Spider server

These systems are provided on a set of distributed servers on the JSC Institutional network.

8.1.13 Systems and Support

Systems and support consists of the following elements:

- Systems hardware and software
- Development and engineering
- Configuration Management and Planning

The systems hardware and software element is comprised of off-the-shelf servers and software components that provide the foundational layer of the applications system. There is no custom hardware within the current application system, and software customizations typically exist only in the scripting layer of the application systems (i.e., Java, Cold Fusion). Operating environments are predominantly Windows NT, although Unix is also employed for selected systems. Application systems, which require back-end database support, typically use Microsoft SQL Server, although Oracle is used for selected systems.

Development and engineering resources are primarily provided through the Application Development and Support Contract (ADSC) and the IMPASS contract. A small civil service staff provides contract insight / oversight, planning, and some hands-on development for unique

application requirements and for skills-building to maintain technology expertise and qualified project leadership.

Configuration management and planning is integral to the development and sustaining engineering process, and is performed within the auspices of the ISD Control Board (ICB).

8.1.14 Facilities

Most of the processing platforms associated with the application system reside in building 46 of the Johnson Space Center. Production and development resources are physically separated within the facility. The organizational systems are distributed throughout the JSC facilities.

8.1.15 Technology Flashpoints

Key flashpoints of importance to the Application System consist primarily of technology driven incompatibilities in the following areas:

- Workstation hardware and operating system environment.
- Server hardware and operating system environment.
- Other application systems.

Mitigation for system incompatibilities is achieved through consistent management across development and production platforms, with configuration management processes that ensure adequate testing and documentation is performed.

8.1.16 Compliance

The JSC Application System complies with the policy and guidelines of the NASA and the JSC IT Strategic Plan and Security documents (NPG2810 and JPG 2810). The use of COTS packages and a commitment to industry standards promotes interoperability and flexibility in choosing vendors. Leveraging existing infrastructures as much as possible promotes resource sharing.

8.1.17 Capabilities

The ISD Application System provides for web-based application systems that meet wide-ranging information processing requirements. These requirements range from process automation to information dissemination to engineering design data management. Several examples are:

- Engineering Design Data Management
- Electronic Document Management
- Digital Imagery Management
- ISO Corrective Action Process
- Executive Correspondence Management
- Knowledge Management

8.1.18 To Be Condition

Growth in the size and number of general web applications is nominally 10% per year for the majority of application systems within the overall External Applications System. Server obsolescence and workload consolidation and balancing are the primary drivers underlying a three-year replacement cycle for processing platforms. FY03 activities are underway to replace the aging application server infrastructure with newer, mid-range platforms. Most notably, the architecture is being revised to allow for separation of developed and COTS workloads, in order to reduce the number and likelihood of integration problems. Staging and integration environments are also being introduced in order to improve the effectiveness of testing and the overall quality of the production systems.

The Design and Data Management System (DDMS) and Electronic Document Management System (EDMS) represent the most notable areas of growth for ISD application support through FY04, with additional growth anticipated in FY04 and beyond. Expected growth in the number of products is roughly 50%. Architectural changes will be driven by system reliability, availability, and interoperability requirements as necessary.

8.2 Communications Segment

8.2.1 Wide Area Network Component

JSC does not have any WAN components

8.2.2 Local Area Network Component

The Johnson Space Center (JSC) is made up of four separate facilities that support the Human Exploration Program for NASA. The facilities are the JSC, Ellington Air Field, Sonny Carter Training Facility, and the White Sands Test Facility. Supporting the JSC is an Institutional Infrastructure that provides services and support such as e-mail, file storage, and data communications. The Local Area Network, or JSC Institutional Network, is the institutional network backbone for the JSC.

8.2.3 As is Condition

This function provides digital networking services within the buildings and across the Center, including hardware, software, and services for approximately 13000 users and systems. Also provided is Center-wide IT security services for the network.

8.2.4 Systems Description and Operational Concept

The JSC Institutional Network is a local area network with a primary FDDI ring and several FDDI subnets connected by Cisco routers. The desktop workstations and servers tie to the network at concentrators. The FDDI campus backbone connects the JSC buildings with a 100 Mbps FDDI. The Backbone is currently being upgraded to a switched mesh Gigabit backbone. Currently about 1/3 of the buildings on site have been transitioned to the new backbone. The connectivity for the end workstations is also in transition. In legacy areas of the LAN workstations connect to the LAN with a 10 Mbps shared connectivity. In the areas where the network has been modified workstations are connected to a 100Mbs switched mesh system.

As part of the networking services, JSC operates a Windows 2000 Forest which is configured as the Center Master Authentication Domain. All systems users have a domain account and the ID is used to access most network resources at the center. The server resources are still a mix of Windows 2000 and Windows NT4.0.

The supported user functions provided by the Information Systems Directorate include:

- User accounts
- Messaging
- User system configuration management and services
- Print services, file services, web services
- JSC user organization office automation and applications
- Networking services

8.2.5 Production Network Diagram

The JSC network consists of 3 zones of protection. There are firewalls installed to separate the 3 zones. This architecture allows for the protection of core systems and at the same time allows for the required external connectivity.

Zone 1: is the internet, including the other NASA centers. Very few JSC resources reside in this zone. One example of a service that resides here is our External "public" web site. In fact, the public web site is completely outsourced and is off of our internal bandwidth and address space.
Zone 2: "the DMZ" is where many of our local contractors are connected. While the inner firewall protects JSC from these connections, the connections are not protected from one another. Before being connected here, each company has to acknowledge that they are not being provided security services and must protect themselves. In addition, zone2 contains a number of services that are accessed from the internet (the public, other centers, and/or local contractors). Access is usually restricted to specific services. "public" web sites and the PPTP tunnel services are examples.
Zone 3: is the internal network of the center. Most of the JSC resources reside here. Desktop workstations, e-mail servers, files servers are all resources that reside in this zone.

Other protected areas at JSC are contained within zone 3. These areas are of significant importance and/or criticality that they warrant protections above the protections provided by Zone 3. The Mission Control Center is a good example.

Figure 43 shows the high level JSC network architecture. With the internal networks on the right and the WAN connectivity on the left.

Figure 43, JSC Institutional Network

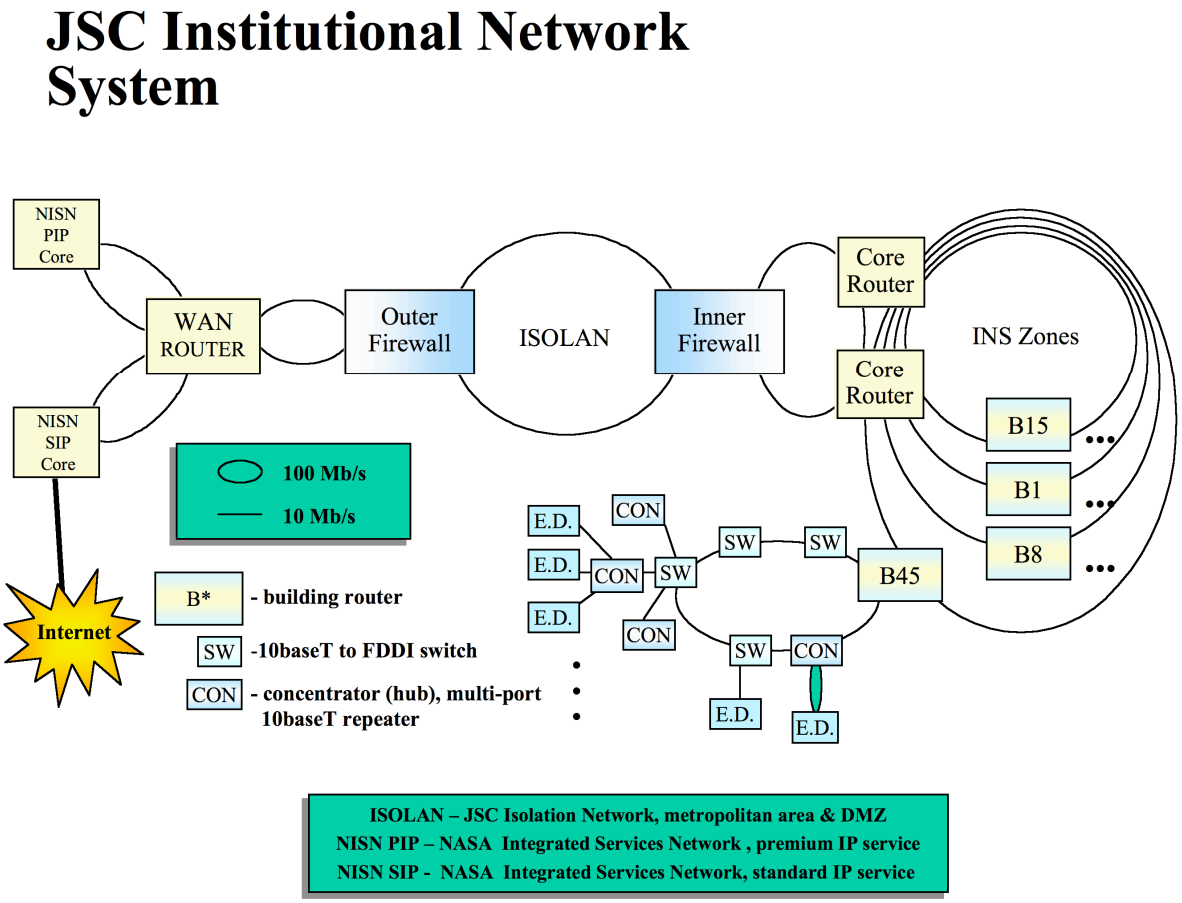

8.2.6 Systems and Support

<u>Configuration Management</u>
High level configuration management of the LAN is controlled by the Network Access Control board. This board reviews and approves all external connection requirements. In addition, it monitors the architecture of the system to assure that it continues to meet agency design and security requirements.

<u>Implementation</u>

Implementation of the network is managed by the Information Systems Directorate. A mixture of Civil Service and contractor personnel are used to design and implement the network. The Firewall system is considered so sensitive that a separate contract has been let to directly assist the CS staff.

Maintenance

The LAN is maintained by the Information systems directorate. The Firewall systems are considered so sensitive that a separate contract has been let to directly assist the CS staff. The balance of the network is operated and maintained by the ODIN contractor. The system is actively monitored 24x7x365 to assure that problems are addressed early.

User support

The users are supported thru the ODIN contract. The Odin helpdesk intercepts all user calls and relays any issues to the LAN maintenance teams.

8.2.7 Facilities

JSC provides the facilities (computer rooms, training, officer) that are used to support the JSC Institutional Network. The bulk of the JSC provided computer room space and associated needs (e.g., power, security, etc.) are provided in two separate buildings. Building 46 contains the servers and the backbone resources. B17 contains the equipment to support the connections to the Wide Area Network. Both buildings are equipped with redundant power and are configured to support computer systems. The rest of the network is supported in a series of wiring closets in each building to support the distributed nature of a LAN.

8.2.8 Technology Flashpoints

Bandwidth requirements to the WAN - Requirements for bandwidth continue to grow
Firewall and web filtering for gigabit networks -The capability of the firewall and web filtering systems are being strained by the growth in traffic between JSC, other centers, and the internet. Additional demands for bandwidth are a continuing factor. For example, if one of the One-NASA Email Systems (OES) that are currently being piloted is in fact used for the agency email, then ALL email traffic will traverse the wide area network and the firewall systems at the center.
Use of Multicast technologies
Voice Over IP

8.2.9 Compliance

The JSC Institutional network complies with the policy and guidelines of the NASA and the JSC IT Strategic Plan and Security documents (NPG2810 and JPG 2810). The use of COTS packages and a commitment to industry standards promotes interoperability and flexibility in choosing vendors. Leveraging existing infrastructures as much as possible promotes resource sharing.

8.2.10 Capabilities

-User accounts
-Messaging
-User system configuration management and services
-Print services, file services, web services
-JSC user organization office automation and applications
-Networking services

8.2.11 To Be Condition

The to-be condition will be a completion of the work that is being done now. The backbone of the LAN will have a gigabit of bandwidth from point to point. Internal to JSC buildings bandwidth to the desktop will be 100Mb and will be a switched environment instead of a shared environment or aggregate environment. The topology will be converted from a "zone" to a "core" routing topology.

8.2.12 Voice Component

The Johnson Space Center (JSC) is made up of four separate facilities that support the Human Exploration Program for NASA. The facilities are the JSC, Ellington Air Field, Sonny Carter Training Facility, and the White Sands Test Facility. Supporting the JSC is an Institutional Infrastructure that provides services and support by providing services such as e-mail, file storage, and data communications.

8.2.13 As is Condition

This function provides voice services to users including hardware, software, services and communications that are not provided by NASA WANs. Examples are wireless pagers, cell phones, and local and long distance telephone services.

Systems description and Operational Concept

The CTS provides the following services to authorized users:

- Telephone service: local telephone service within the JSC facilities, including but not limited to, Ellington Field and Sonny Carter Test Facility, local outside line service, and long distance service. The service provides direct inward dialing.
- Voice mail service: voice mail service with password control
- Data service: inward and outward dialing from modem equipped computers and facsimile machines attached to analog subscriber lines.
- ISDN service is not provided to users although the system can support it.

The hub of the CTS is JSC, Building 17, and room 134. This room contains the host EWSD™ switch and voice mail system along with the Main Distribution Frame (MDF) connecting to the Southwestern Bell Telephone Company (SWBT) trunks, to the Federal Telecommunications

System (FTS) trunks via the National Aeronautics and Space Administration (NASA) NASA Integrated Services Network (NISN), and to the Satellite Distribution Frames (SDF) at the remote switch unit locations. Building 17 also contains the spares inventory.
The host and three remote switching units serve over 13,000 digital and 2,700 analog subscriber lines located throughout the JSC complex, including Ellington Field and Sonny Carter Training Facility (SCTF). A remote processor is installed in JSC Building 30A, Room 1069E; this is linked to the Building 17 facilities through new copper backbone cable support. The Ellington Field system, located in building E260, consists of a remote processor that is connected to the JSC EWSD™ host via the INS. The SCTF remote processor is located in the SDIL Building and connected to the JSC EWSD™ host via the INS. Support for switched data communications is provided by the CTS to users with modem equipped terminals and analog telephone sets. Data calls to and from offsite locations are routed through the EWSD™ system. Voice traffic to other NASA and Government locations is routed from the CTS through the NASA Integrated Services Network (NISN) and FTS-2000/FTS-2001. The JSC NISN switch is located in a room adjacent to the primary CTS center in Building 17. The Remote Access To ETN (RAETN), also known as Direct Inward System Access (DISA), feature allows an authorized caller from the POTS network to dial a Directory Number and, when prompted for a Security Code and an Authorization Code, to gain access to the translation and routing facilities of the EWSD telephone system located at the Johnson Space Center.

8.2.14 Production Network Diagram

Figure 44

NASA
Johnson Space Center
EWSD Trunking Network

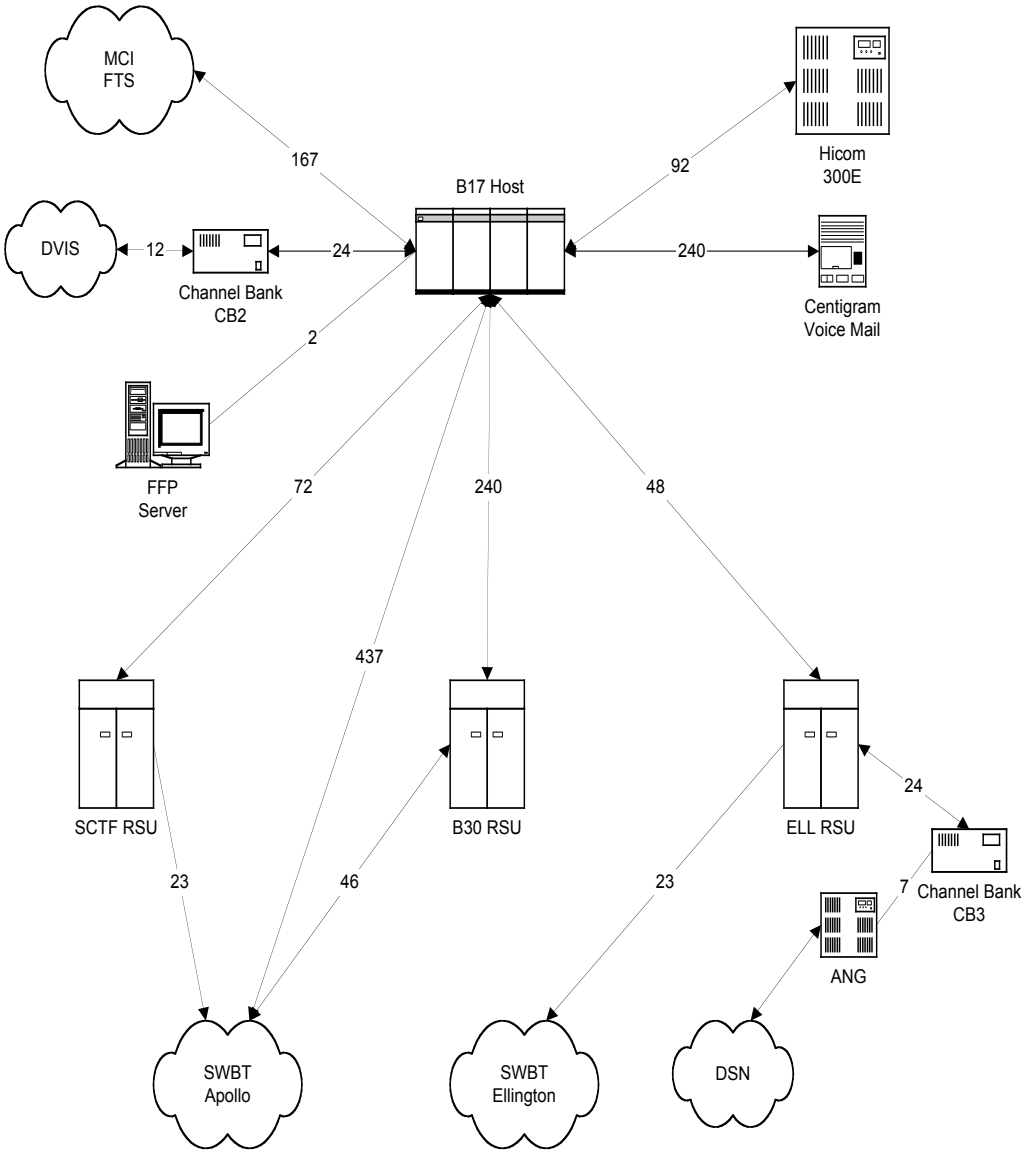

8.2.15 Facilities

JSC provides the facilities (computer rooms, training, officer) that are used to support the JSC Voice CTS. The bulk of the JSC provided space and associated needs (e.g., power, security, etc.) are provided in Building 17, and room 134, where the hub of the CTS is located. B17 contains the equipment to support the connections to the external systems. The buildings are equipped with redundant power and are configured to support computer systems. The rest of the network is supported in a series of wiring closets in each building to support the distributed nature of the phone system.

8.2.16 Technology Flashpoints

None.

8.2.17 Compliance

The JSC Voice system complies with the policy and guidelines of the NASA and the JSC IT Strategic Plan and Security documents (NPG2810 and JPG 2810). The use of COTS packages and a commitment to industry standards promotes interoperability and flexibility in choosing vendors. Leveraging existing infrastructures as much as possible promotes resource sharing.

8.2.18 Capabilities

Telephone service: local telephone service within the JSC facilities, including but not limited to, Ellington Field and Sonny Carter Test Facility, local outside line service, and long distance service. The service provides direct inward dialing.
Voice mail service: voice mail service with password control
Data service: inward and outward dialing from modem equipped computers and facsimile machines attached to analog subscriber lines.

8.2.19 To Be Condition

Voice over IP
Integrated voice, video, fax, and data
Message based phone mail (accessible by computer)

8.2.20 Video Component

The Johnson Space Center (JSC) is made up of four separate facilities that support the Human Exploration Program for NASA. The facilities are the JSC, Ellington Air Field, Sonny Carter Training Facility, and the White Sands Test Facility. Supporting the JSC is an Institutional Infrastructure that provides services and support by providing services such as e-mail, file storage, data communications

8.2.21 Systems description and Operational Concept

Television systems at JSC designed and operated by ISD support all elements of the Center's goals, and contribute to many programs at other Centers and NASA Headquarters. The systems utilize a number of different television technologies (e.g. cable, RF, analog, digital). This document describes the major ISD television systems, their purpose, and a short description on each systems future. Television is continuing to be an effective communication tool for NASA and currently no specific capability is slated to be retired. (Old unsupportable technologies are being retired and replaced). Reference the attached diagram.

System and support requirements for the television systems originate from various organizational elements at JSC. Reference the following paragraphs where a notation has been made to describe whose organizational requirements are being met by the system. Some systems (such as the networks, tape duplication, signal validation) support all organizations and programs, others were designed to perform specific functions for unique requirements. Where possible duplicate systems have not been constructed to perform similar functions for different organizations. For example the mission video processing requirements for both Shuttle and International Space Station are being performed by a consolidation of systems located in a single area with operators that support both activities simultaneously.

Legend:
(SSP): Space Shuttle Program
(ISSP): International Space Station Program
(PAO): Public Affairs Office (and by definition supporting all NASA organizational requirements for dissemination of information)
(All): consolidated system built to satisfy all JSC requirements, including ISS, Shuttle and PAO.

<u>BASEBAND TRANSMISSION NETWORK</u>

The baseband video network is used to transport video and audio signals between JSC facilities for recording, distribution for viewing, or re-transmission to other facilities and external interfaces.

Most signals are transmitted in an analog NTSC format over fiber optic cabling.

Upgrade projects are in work to replace analog linegear with digital (uncompressed) linegear and to replace older (unsupportable) twin axial copper and multi-mode fiber with single mode fiber that can also carry higher data rates associated with high definition television. ISD is also utilizing unused spare cabling laid in for the Center's data networks to carry television signals and is investigating compressing television signals for carriage over the center's I/P network. (All (see Legend above))

<u>ROUTING</u>

Routing of television signals is under control of the video operators in building 8 and building 2 who have control panels that select any input to any output, via interfaces to a control system. Complex routing operations can be pre-stored and executed under a few key strokes.

Analog signals are routed in a baseband format, digital signals are routed using a different set of switchers and operate in an SDI (Serial Digital Interface) format, generally at the 270Mbs rate.

Upgrade paths include expanding the capacity of the digital routers, retiring the analog routers, and adding a new capability to route high definition signals. (Currently the high definition capability design sends HD signals directly with no routing capability). (All)

VIDEO DOWNLINK RECORDING/PLAYBACK SYSTEM (VDRPS)

Used to record and replay ISS and Shuttle downlink video signals.

Uses a hybrid of COTS digital betacam tape and MPEG 2 video server recording technology and the system is operated using a custom control system. The quantities have recordings have not yet necessitated employing an automated juke box type system for making the recordings.

An upgrade plan is being formulated to address the proposal for increasing the spacecraft downlink capability to 150Mbs (and the ability to downlink more television signals). Also as the JEM and Columbus modules come online with their video systems the number of video sources will increase. When high definition television becomes a permanent feature of spacecraft downlink systems the ground system will have to be modified to record these signals. (SSP/ISSP)

VIDEO ASSET MANAGEMENT SYSTEM (VAMS)

Used as a tool to catalog and describe the subject matter in downlinked and onboard ISS and Shuttle video, and publish it for searching at all NASA sites. The system makes a low resolution version of the video and makes it accessible, along with the catalog and metadata via a web interface at http://jsc-isd-vid02.jsc.nasa.gov/screeningroom/

No specific upgrades are planned except to make this resource available to PI's and international partners outside the @NASA domain. This system is PC based and will require a significant amount of sustaining engineering to make it compatible with future operating systems. (SSP/ISSP)

SIGNAL VALIDATION AND ADJUSTMENT SYSTEM (SVAS)

Technical control and switching hub for the television network. Includes distribution equipment, analog test equipment, confidence and display monitors. Operator call sign Johnson TV. The operators performs circuit validations and are in audio communication with the MCC-H and other NASA entities overseeing video.

Upgrade path to include retiring some of the analog test equipment and bring online digital circuit transmission test equipment. Replace monitors as they become degraded and un-repairable. (All)

TAPE DUPLICATION FACILITY (TDF)

Used to produce high volume video tape copies of master recordings and PAO productions. Has a small capability to make DVD copies.

Upgrade path to automate signal routing from the master machines to the copying machines, by adding a router. Add a solely digital dub capability, and expand the disk production capability.

As the collection of video recordings age it is necessary to transfer them to newer video media. (Because tape eventually decays and the older machines are not available to play back the original material). ISD has aggressively performed this function and will continue to plan for new machines to make the newer recordings. Eventually the new recordings are retired to NARA). (All)

DIGITAL MASTERING SYSTEM (DMS)

Used to master and edit video material in the digital domain. A modern design that can be expanded to include other digital formats as they been standardized. Editing of standard definition television material is done on hard drives (non linear) editing of high definition television is done on video tape. Migration to non-linear HD editing is not cost effective at this time. (All)

MASTER RECORD/PLAYBACK AREA MRPA

Used for processing spacecraft onboard video tapes returned by Shuttle and Soyuz vehicles, and performing master recordings of institutional activities. A redesign of this system is being planned to replace old un-repairable equipment and to make the area an efficient place to handle the onboard tapes. (This system and area used to produce Shuttle downlink recordings as its prime function and that work is now performed in the VDRPS system). (All)

VIDEO TELECONFERENCING (VTC)

Video teleconferencing systems are used to conduct NASA business meetings and to transmit operational mission and test video to other NASA and ISS foreign locations.

ISD (and NISN) are currently in the process of replacing room systems that rely on an analog video line interfaces to building 8, with systems that contain a CODEC in the room, and a direct connection to an ISDN service. This is being done to retire the unsupportable analog lines and to also retire the custom unsupportable room control systems, with COTS systems. (All)

No change is envisioned with the systems that support overseas connections (follow the market and employ better compression codec as they become available)

The capability to conduct VTC's over I/P is being studied ISD and NISN.

CABLE TELEVISION (CATV)

Transmits 36 channels of television over coaxial cable using radio frequencies (RF). Appears in most buildings on the tunnel system and some of the outlying buildings. Carries programming that supports a mission and institutional role. In some buildings internal video signals are also RF modulated over the same cable. Current termination points are approximately 1,500 site wide.

Smaller independent CATV systems also have been installed at the SCTF and Ellington Field.

A migration path is being investigated to use a COTS equipment and hybrid fiber/coax network at JSC to deliver more channels and enhanced services such as video on demand. (All)

OMNI MICROWAVE

This system transmits four channels of television programming over the air-waves out to a radius of ten miles from JSC. (The antennas are on the roof of building 1). The radio frequency assignment for two of the channels has been reassigned by the FCC for satellite cell phone use and if the licensee in the Houston area decides to provide this service we will have to cease operations for two channels. ISD is investigating alternatives such as video over I/P for service to SCTF and Ellington Field. (All)

SATELLITE RECEPTION

ISD operates several satellite dishes that are available to receive programming transmitted in C and Ku-bands. No capability upgrades are envisioned for these systems. The dishes are steerable and require a aggressive PM work schedule and sometimes repair. (All)

TEST AND TRAINING FACILITIES

Test and training facilities operated primarily by the Engineering and Mission Operations directorates are equipped with video systems for monitoring and recording the facility test or training activities. All the systems are analog. The systems that are contain unique environments such as vacuum chambers and the NBL are custom designed. As subsystems and parts become obsolete replacements will be recommended. A sustaining engineering function is performed to maintain these systems to defer wholesale replacements. (All)

TELCO

The baseband video system interfaces with SBC (formerly Southwestern Bell) for external interfaces to the NBL and can be utilized for interfaces to other remote locations. This interface could be replaced to carry compressed video and provide lower cost service over the traditional video tariffs SBC utilizes. (All)

PAO/MEDIA DISTRIBUTION

ISD maintains a video interface with the video systems operated by PAO in building 2, and distribution of video signals to media interfaces next to building 9. When digital television is offered by NASA we expect to upgrade the media interface to be compatible. The NASA digital television working group is proposing a multi-channel distribution of NASA Television and other channels throughout the USA. ISD will be supporting these upgrades with digital transmission and interfaces.

Note that the design, and installation of television systems used by PAO for Production work is provided by ISD when requested (and funded). (PAO)

MISSION CONTROL CENTER (MCC)

A significant baseband analog and digital interface exists between the Video Control Center in building 8 and the MCC. This interface is being transitioned to a digital interface as the spacecraft signals move to digital. A small capability to transmit HDTV at JSC is being planned in conjunction with an HDTV downlink capability being planned for the ISS (STS-114 is slated for the delivery of this system). (SSP/ISSP)

8.2.22 Production Network Diagram

Figure 45, Baseband Video Network

Baseband Video Network

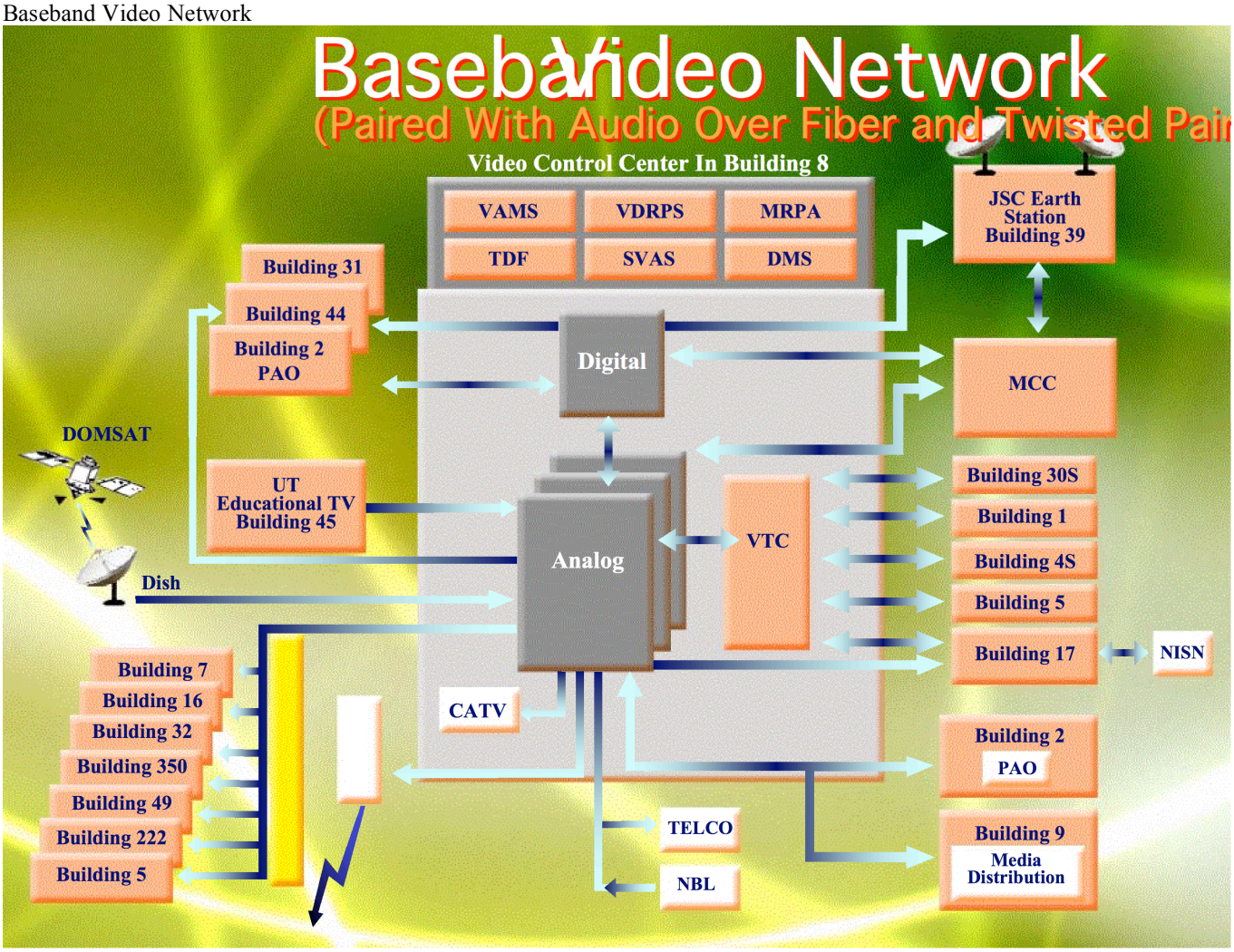

8.2.23 Systems and Support

System and support requirements for the television systems originate from various organizational elements at JSC. Reference the preceding paragraphs where a notation has been made to describe whose organizational requirements are being met by the system. Some systems (such as the networks, tape duplication, signal validation) support all organizations and programs, others were designed to perform specific functions for unique requirements. Where possible duplicate systems have not been constructed to perform similar functions for different organizations. For example the mission video processing requirements for both Shuttle and International Space Station are being performed by a consolidation of systems located in a single area with operators that support both activities simultaneously.

8.2.24 Technology Flashpoints

None identified.

8.2.25 Compliance

The JSC Video Services complies with the policy and guidelines of the NASA and the JSC IT Strategic Plan and ***Security documents (NPG2810 and JPG 2810).*** The use of COTS packages and a commitment to industry standards promotes interoperability and flexibility in choosing vendors. Leveraging existing infrastructures as much as possible promotes resource sharing.

8.2.26 To Be Condition

Digital TV (both standard definition and high definition), transmission, recording and archiving. Tapeless video recording and product delivery.
Note some elements of analog TV will remain if they are cost effective to retain and still meet valid requirements.

8.3 Electronic Work Environment Segment

8.3.1 Messaging and Collaboration Component

The Johnson Space Center (JSC) is made up of four separate facilities that support the Human Exploration Program for NASA. The facilities are the JSC, Ellington Air Field, Sonny Carter Training Facility, and the White Sands Test Facility. Supporting the JSC is an Institutional Infrastructure that provides services and support by providing services such as e-mail, file storage, and data communications. The JSC messaging system is an Exchange e-mail system for institutional support with additional collaborative tools and systems that support specific needs.

8.3.2 As is Condition

The Exchange Email Messaging system provides basic institutional mail delivery for the Johnson Space Center (JSC). Microsoft Exchange Server is an enterprise messaging and groupware system, which includes, but is not limited to, mailbox, public folders, IIS, Outlook Web Access (OWA), blackberry enterprise services, and gateway servers. It is tightly integrated with the Windows 2000 operating systems. A high level of integration ensures that Exchange is optimized to use the features and capabilities of Windows 2000, and takes full advantage of the already familiar management and reporting tools built in. The system is protected by anti-virus software installed on the Exchange Mailbox servers and an anti-virus perimeter that scans all incoming and outgoing email between the JSC Institutional Infrastructure and the Internet and/or external NASA sites.

8.3.3 Systems description and Operational Concept

The JSC Email Infrastructure currently consists of 25 servers.
Data for the 8 mailbox servers is stored in a SAN architecture consisting of 3 PV-660F and 3 PV-224F that have a total of 3.7Tb disk space, fiber-connected to the servers.

All servers are currently connected to the network by either 100mb Ethernet or 1-gigabit interfaces. All Servers are Member servers in the JSC-EMS resource domain (except the Domain Controllers) running NT 4.0 or Windows 2000 (Advanced) Server. All equipment except the Monitoring server and the JSC-EMS resource domain controllers are owned by the Government, these last servers are owned by LMIT Corporation. All servers in this Infrastructure operate on a 24 hour, 7 day a week schedule and are located in Building 46 at the Johnson Space Center.

Blackberry Services:
An overview of the system architecture for the BlackBerry Enterprise Server and BlackBerry Desktop Software is provided in Figure 48. At the heart of this wireless email solution is the BlackBerry Desktop Software (A) and the BlackBerry Enterprise Server (B). Both products use the Microsoft Exchange Server's storage (C) for keeping unique information for each user, including security information, specialized forwarding rules and handheld identification.

Whether using the BlackBerry Desktop Software or BlackBerry Enterprise Server, each user controls his or her own filter rules and encryption key information in the BlackBerry Desktop Manager component of the Desktop Software. The Desktop Manager runs on its own PC or laptop (A), no matter if the BlackBerry Desktop Software or BlackBerry Exchange Edition is being used. The Desktop Manager stores the configuration information in hidden folders in the user's Exchange message store (C). The BlackBerry Enterprise Server also stores redirection statistics in the same location, so that either the desktop user or the Management Information System (MIS) staff can view the statistics to determine if a given handheld is working correctly.

The BlackBerry Desktop Software uses an email transport protocol (D) to reach the BlackBerry handheld, while the BlackBerry Enterprise Server maintains a constant direct TCP/IP level connection (Server Routing Protocol or SRP) to the wireless network (E). Once delivered, information can only be decrypted by the BlackBerry handheld. Information is encrypted and decrypted directly on the user's desktop PC or the company's server as well as on the user's BlackBerry handheld. Assuming the company's server is secure within its building, the only two places the information is accessible, within the BlackBerry solution, are on the handheld and at the company (ex. the user's PC).

Figure 46, Production Network Diagram

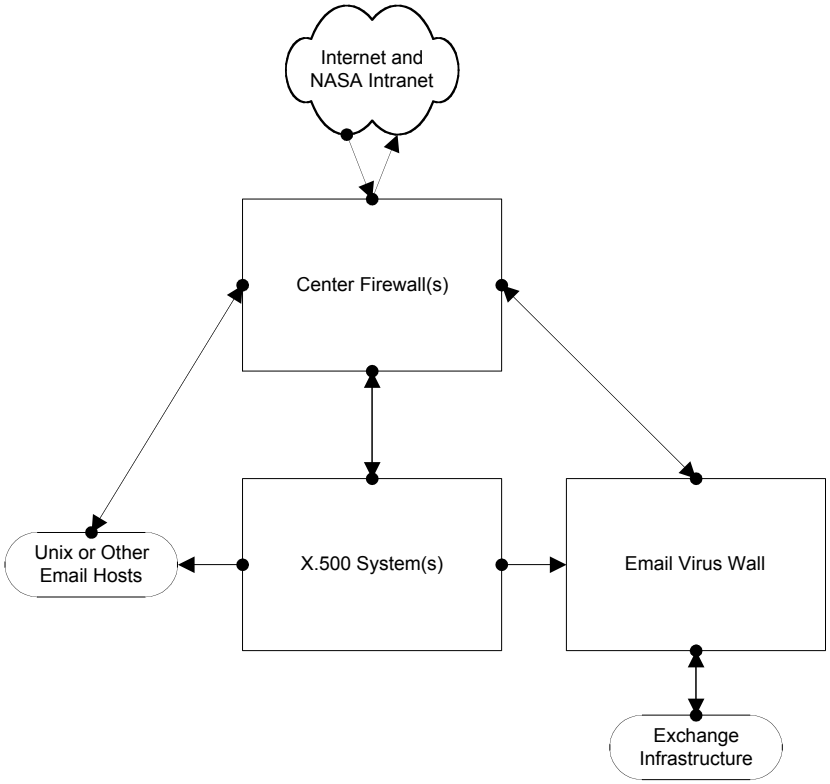

Production Network Diagram

Figure 47

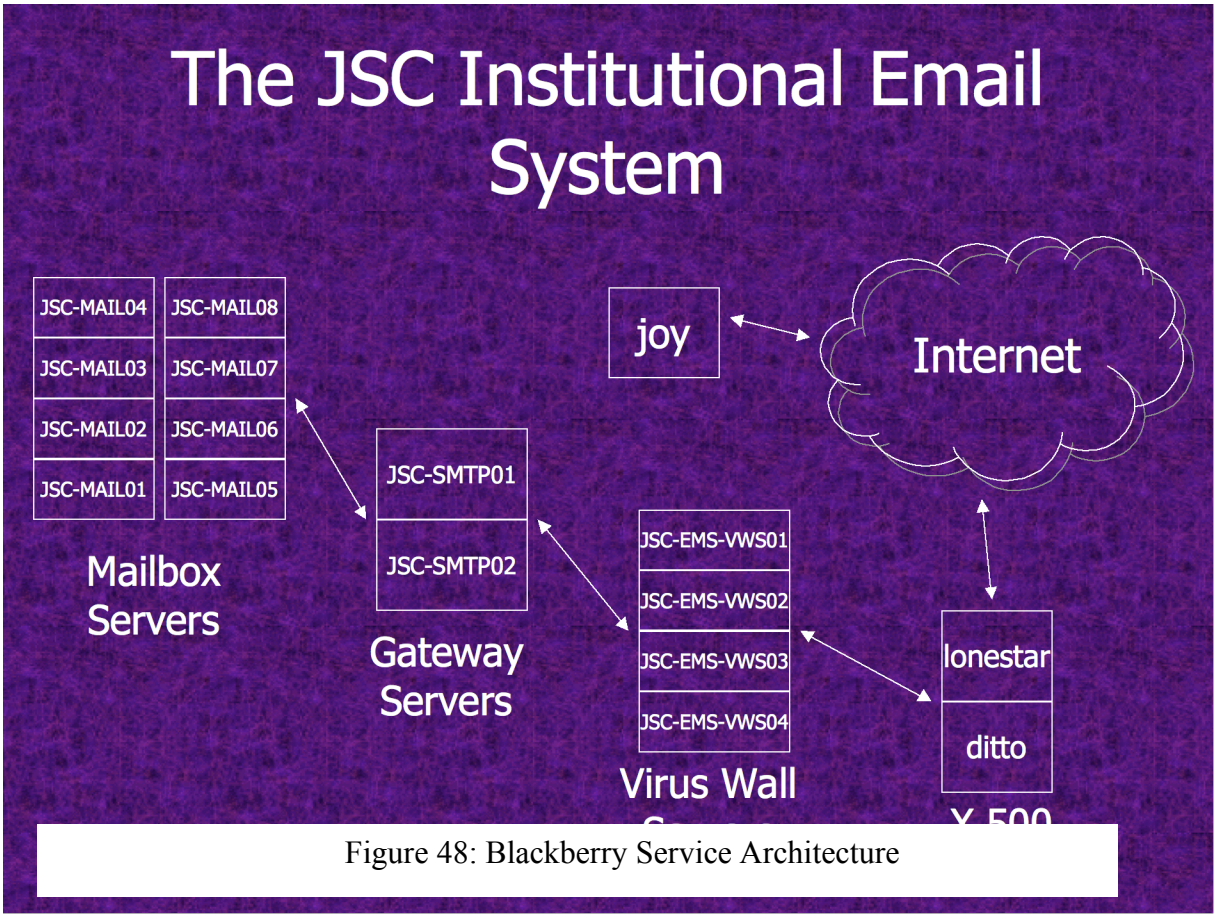

Figure 48: Blackberry Service Architecture

Figure 48: Blackberry Enterprise Server

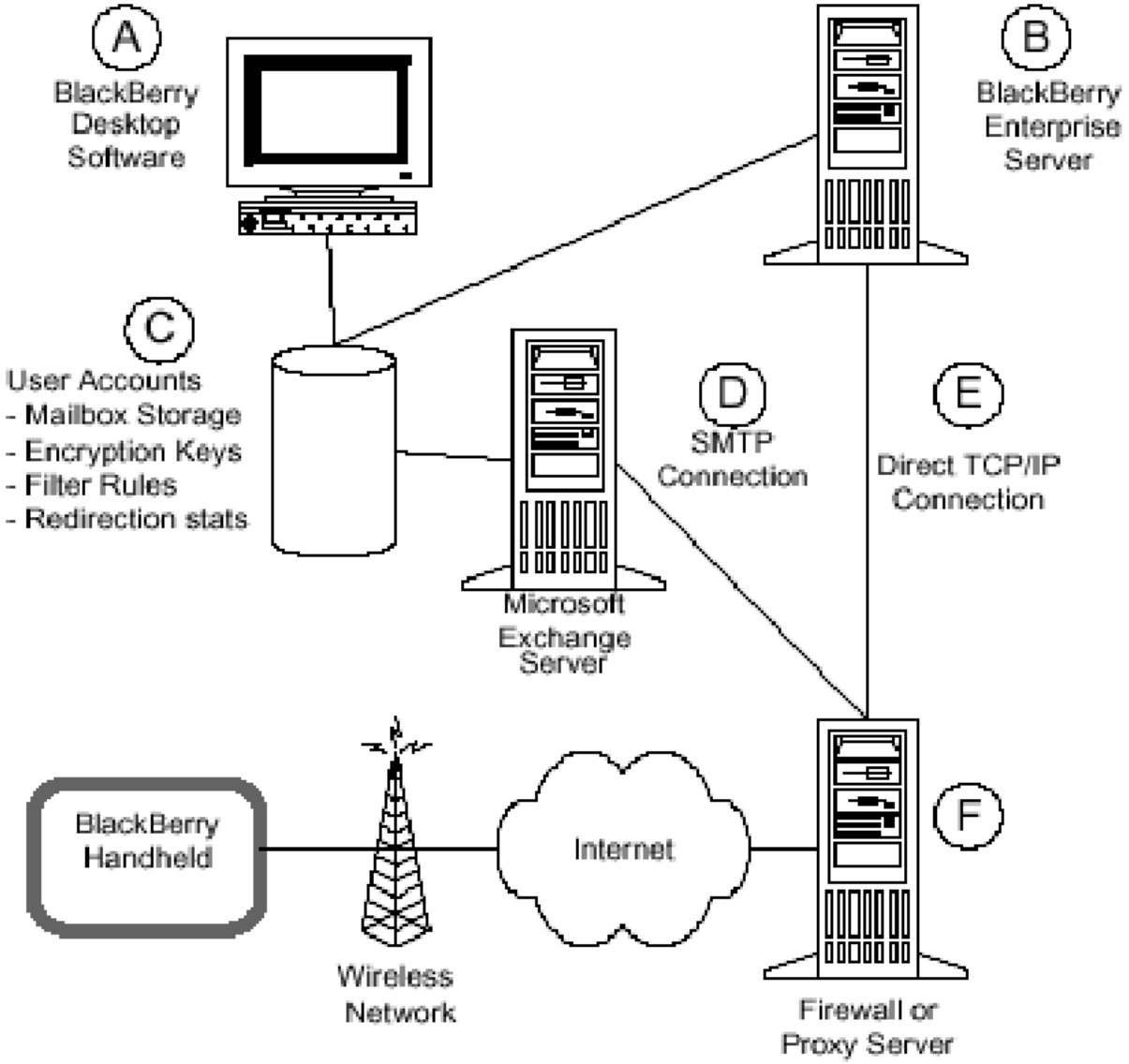

8.3.4 Systems and Support

The function and hardware are as follows:

8 Mailbox servers; DELL 8450 servers with 8 Pentium III 700Mhz processors.
4 Gateway servers: 2 Compaq 4500 servers with multiple 100Mhz Pentium processors; 2 DELL 8450 servers with 8 Pentium III 700Mhz processors.
6 Public Folder servers: 4 Compaq 4500 servers with multiple 100 MHz Pentium processors; 2 DELL 8450 servers with 8 Pentium III 700Mhz processors.
1 Outlook Web Access (OWA) server: DELL 8450 with 4 Pentium III 700Mhz processors

1 Monitor server: Compaq 1600 with a single processor
4 JSC-EMS resource domain controllers: Compaq 1600 servers with single processor
2 Exchange development/backup servers: both DELL 8450 servers with 8 Pentium III 700Mhz processors.
1 Blackberry Enterprise Server: DELL Omniplex workstation with a single 2Ghz processor (to be upgraded to server class hardware)

Maintenance

The Messaging system is maintained by the Information systems directorate. The servers and gateways are operated and maintained by the ODIN contractor. The system is actively monitored 24x7x365 to assure that problems are addressed early.

8.3.5 Facilities

Existing facilities (computer rooms, training, officer) are used to support the JSC Messaging System. JSC provided computer room space and associated needs (e.g., power, security, etc.) to support the Exchange servers.

8.3.6 Compliance

The JSC Messaging System complies with the policy and guidelines of the NASA and the JSC IT Strategic Plan and Security documents (NPG2810 and JPG 2810). The use of COTS packages and a commitment to industry standards promotes interoperability and flexibility in choosing vendors. Leveraging existing infrastructures as much as possible promotes resource sharing.

8.3.7 Capabilities

The JSC Messaging System includes:
e-mail
Wireless e-mail
Calendaring
Scheduling
Task tracking

8.3.8 To Be Condition

The JSC is currently in the strategy development of transitioning the current Exchange 5.5 system to Exchange 2000. However, this is currently on hold pending the decision on the Agency Enterprise Messaging System.

8.3.9 Public Web Component

The Johnson Space Center (JSC) is made up of four separate facilities that support the Human Exploration Program for NASA. The facilities are the JSC, Ellington Air Field, Sonny Carter Training Facility, and the White Sands Test Facility. Supporting the JSC is an Institutional Infrastructure that provides services and support such as e-mail, file storage, and data communications. The Local Area Network, or JSC Institutional Network, is the institutional network backbone for the JSC.

8.3.10 As is Condition

The JSC public web services are made up of several distributed web servers both internal and external to the JSC Institutional Network external boundary. The humanspaceflight.gov web site is currently housed by an outsourced service through PSINet (recently purchased by Cogent). The JSC public Unix web server (Vesuvius) is known as www.jsc.nasa.gov, vesuvius.jsc.nasa.gov and listserv.jsc.nasa.gov. Vesuvius is the true hostname; all others are alias names. The system provides two public services, which are SMTP and HTTP. Private services for contractors and/or NASA employees are FTP, telnet and SSH.

8.3.11 Systems Description and Operational Concept

IMPASS Web Developers maintain two Web sites, the Human Space Flight Web (HSF), hosted by PSINet, and the external JSC Web, hosted on a local JSC server. Figure 49 illustrates the general architecture of the hardware that makes up the development, staging, and production environments of the HSF and JSC external Web sites.

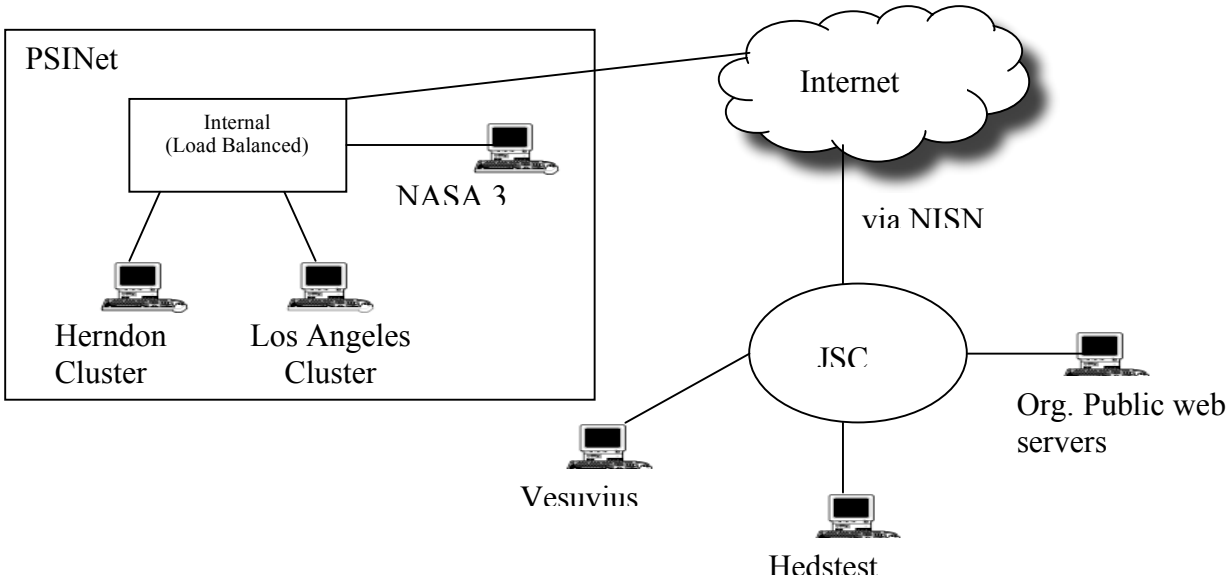

Figure 49: JSC Public Web Network Web

A three-stage approach is used for publishing content to the Human Space Flight Web. First, new pages are developed on a local JSC server maintained by IMPASS. Once pages are complete, reviewed, and approved, they are uploaded to an off-site staging server owned and maintained by PSINet, where they are tested a second time. Finally, updates to site content are automatically propagated by software provided by PSINet, to four off-site PSINet production servers, where they are accessible to the public.

The development environment for both the HSF and JSC sites is located on HEDSTEST (HEDSTEST.JSC.NASA.GOV), a Sun Ultra Enterprise 450 running Solaris 2.7, located in JSC Building 46. HSF developers interact directly with this server through a utility that serves UNIX file systems to NT networks. An Apache Web server runs on this server, and has a virtual machine defined for the local copy of the site, so work in progress can be tested directly from the development server.

PSINet provides access via FTP and TELNET to a staging server offsite, an HP server running HP-Unix. This server mirrors the configuration of the production (public) servers. Every 15 minutes, an automated propagation script on the staging server distributes any additions, deletions, or changes to content to the production servers. The staging server is the only PSINet server to which HSF developers have direct access via FTP or TELNET.

8.3.12 Production Network Diagram

Figure 49 above illustrates the general architecture of the hardware that makes up the development, staging, and production environments of the HSF and JSC external Web sites.

8.3.13 Systems and Support

The public web servers that support the JSC are distributed on several different platforms and web server applications. Following is the types of operating systems and the types of web services applications:

- OS
  - AIX
  - Linux
  - MAC
  - Windows NT
  - Windows 2000
  - Solaris
- Web services application
  - Apache
  - AppleShare
  - Claris FileMaker Pro Web
  - IIS
  - IPlanet
  - Oracle Web Server
  - Stronghold

The development, maintenance, and operations of these systems and services are provided by outsourcing, contractor, or civil servant labor depending on the system and the organization. The outsourcing for the Humanspaceflight.gov website is with PSINet and the content development is performed by IMPASS.

There are four production servers which serve the Human Space Flight Web site to the public - two on the west coast and two on the east coast. All four are HP servers running HP-UNIX, with configurations identical to the staging server. These servers are load-balanced so that each user requesting a page from spaceflight.nasa.gov is automatically and transparently routed to the server with the least traffic. Each coast has one server which is directly updated by the staging server propagation script, and one NetCache server which pulls its content from the other server on that coast. HSF developers can check content either to the whole site through the spaceflight.nasa.gov URL, or on each of the four production servers by specifying IP address. This permits periodic verification that propagation is working correctly.

8.3.14 Facilities

The Human Space Flight Web site is supported and maintained by PSINet at a facility on the west (Los Angeles, CA) and one on the east (Herndon, VA) coast. JSC provides the facilities (computer rooms, training, offices) that are used to support the JSC Public Web Services at JSC.

8.3.15 Technology Flashpoints

None.

8.3.16 Compliance

The JSC Web Services complies with the policy and guidelines of the NASA and the JSC IT Strategic Plan and Security documents (NPG2810 and JPG 2810). The use of COTS packages and a commitment to industry standards promotes interoperability and flexibility in choosing vendors. Leveraging existing infrastructures as much as possible promotes resource sharing.

8.3.17 Capabilities

SMTP
HTTP
FTP from NASA to PSINet

8.3.18 To Be Condition

Integrated with the OneNASA Web Services where applicable.
XML implementation for information exchange.
Distributed server consolidation and integration.

9 Kennedy Space Center (KSC)

9.1 Introduction

The goal of the Enterprise Architecture team is to develop a strategic enterprise tool used to align NASA's business mission and IT strategy. Enterprise Architecture identifies strategic IT focus areas in support of the agency mission. IT Infrastructure Architecture is one of the critical elements in the accomplishment of NASA Enterprise Architecture. This allows integration and coordination across the enterprise.

9.1.1 Purpose

In order to examine the range of IT infrastructure, each center was tasked with detailing the major components of office automation, IT infrastructure and telecommunications. A pre-designed template was used to collect the "As-Is" documents that provided detailed analysis of the IT components and services that support the delivery of business process and/or services. One point of concern was that the technology flashpoints might be controlled by cultural demands versus IT demands.

9.2 Computing Services Segment

9.2.1 Desktop Architecture Component

The KSC desktop environment consists of a variety of hardware, operating systems, and software, utilizing network services to perform functions such as: Launch preparation research, business management, document production & management, communications, and education.

9.2.2 As is Condition

The Outsourced Desktop Initiative for NASA (ODIN) contract, which covers approximately one quarter of KSC's approximately 14000 desktop systems. ODIN provides end users with a standard desktop system, a centralized help desk, and a standard software load, which includes common business, administrative, and security software on Macintosh, Windows, and Unix operating systems. ODIN also manages the local area network to which all of Langley's desktop systems are connected.

Other IT providers at KSC are the primary KSC contractors, United Space alliance (USA), Boeing (CAPPS), and other smaller contractors. Each maintains different OS postures, loads, and applications.

9.3 Communications Segment

9.3.1 Wide Area Network Component

The KSC managed wide area network (WAN) utilizes off-the-shelf products to provide standards-based connectivity for devices requiring off-Center connectivity to other NASA Centers and to the Internet.

9.3.2 As is Condition

The WAN connects to the local area network (LAN) via a security perimeter network referred to as the "Isolation Network". KSC has two center wide interface points known as “ISO West” and “ISO East”. ISO West is the NISN/NASA primary interface point and ISO East is the primary interface to Cape Canaveral Air Station launch complex.

The LAN connects to the Isolation Network at two points. These interface points are a combination of screening routers and clustered Firewall-1 firewalls. The ISO West/NISN interface to the Firewall system is the primary ingress and exit point to NASA and the internet. Here the three primary network security zones (Private, Public & Open) have been implemented. ISO East interfaces to the 45th Space Wings DMZ network and Canaveral launch facilities.

9.3.3 Systems description and Operational Concept

Two service providers connect to the Primary ISO West Network, NASA Integrated Services Network (NISN) and Time Warner Communications (TWC)/Quest. NISN provides two types of services, Standard IP (SIP) and Premium IP (PIP). Those routes not provided by NISN are provided by Bellsouth. The traffic flow is distributed approximately 85% NISN SIP, 10% NISN PIP, 5% Bellsouth.

9.3.4 Facilities

Wiring space is maintained for housing network infrastructure devices. Isolation Network facilities maintain proper environment and back-up power. Workspace is also provided to civil servants and contractors who maintain the network. This includes space for the local network operations center.

9.3.5 Local Area Network Component

The Kennedy Space Center managed local area network (LAN) utilizes off-the-shelf products to provide standards based connectivity to over 14,000 research, support, and infrastructure

devices. The Kennedy Space Center LAN, referred to locally as KNET, is Kennedy Space Center's primary business network serving the over 12,000 employees and visitors on the center.

9.3.6 As is Condition

KNET utilizes a combination of media that includes copper, fiber, and RF wireless.

The following describes the breakdown of connections and media.

- 50% of connections Category 5e copper
- 45% of connections Category 3 copper
- 5% of connections coaxial
- <1% of connections single or multimode fiber
- <1% of connections RF wireless

Some Cat 5e star wired local to rooms, not in locked Communications rooms

The network services over 14,000 nodes. The breakdown of the node types follows.

- 80% PC/Windows desktops and servers
- 10% UNIX desktops and servers
- 5% Apple/Mac desktops and servers
- 5% Printers
- <1% Other desktops and servers

Desktop bandwidth capability is provided at the following ratios.

- 70% at 10 Mbps
- 30% at 100 Mbps
- <1% at 1000 Mbps

The primary media access technology is Ethernet. Internet Protocol (IP) is the primary routable protocol for KSC. AppleTalk and Internetwork Packet Exchange (IPX) are available in limited areas, but are slowly being phased out. This media and protocol allow for a wide array of applications that support the user's requirement for electronic messaging, data streaming, file sharing, and file storage.

9.3.7 Systems description and Operational Concept

KNET is composed of a switched core layer, a routed distribution layer, and a switched access layer architecture.

The core of KNET is known locally as the Kennedy Metropolitan Area Network (KMAN) backbone. This Ethernet backbone is based on two redundant high performance switches and one redundant medium performance switch. The primary backbone link composes of two high performance switches are connected at 1Gbps and the medium switch connected at 100Mbps. The secondary link has similar connections.

The distribution layer consists only of routers attached to the primary and secondary core switches. The routers connect to the core switches via gigabit at the major facilities and 100Mbps links at the other facilities.

The access layer devices connect to the distribution layer routers via gigabit or 100Mbps links. The access layer devices consist of 10/100Mbps switches and 10Mbps hubs. The wireless LAN with enhanced security is integrated as part of the access layer device. Digital subscriber line devices are also part of the access layer devices.

The wide area connectivity is provided through the firewall systems routers that are attached to the KMAN. Dial-up connectivity is provided via two ISDN PRI lines that allow 46 simultaneous connections. Voice over IP is provided in limited areas. Client-to-Network VPN service is in beta testing.

Four security zones are recognized at KSC. The "open" network resides outside the Center's primary firewalls. These networks are considered low-risk and only have access to the Internet and public resources with KSC. The "public" network is partially secure and is only somewhat more secure than the open networks. The "private" network provides user connections inside the KSC firewall infrastructure. These are high-risk connections that include Internet and Inter-Center connections. Finally, there are the special projects and operational networks. These customer owned and maintained networks must have their own security plans that are subject for approval by the IT organization.

Center policy designates the Communications Services Branch, under the Information Technology and Communication Services Directorate, as the sole managing agent for the institutional network. This includes accountability for cabling, electronics, and security.

Network Diagrams

KSC general network diagram.

Figure 50

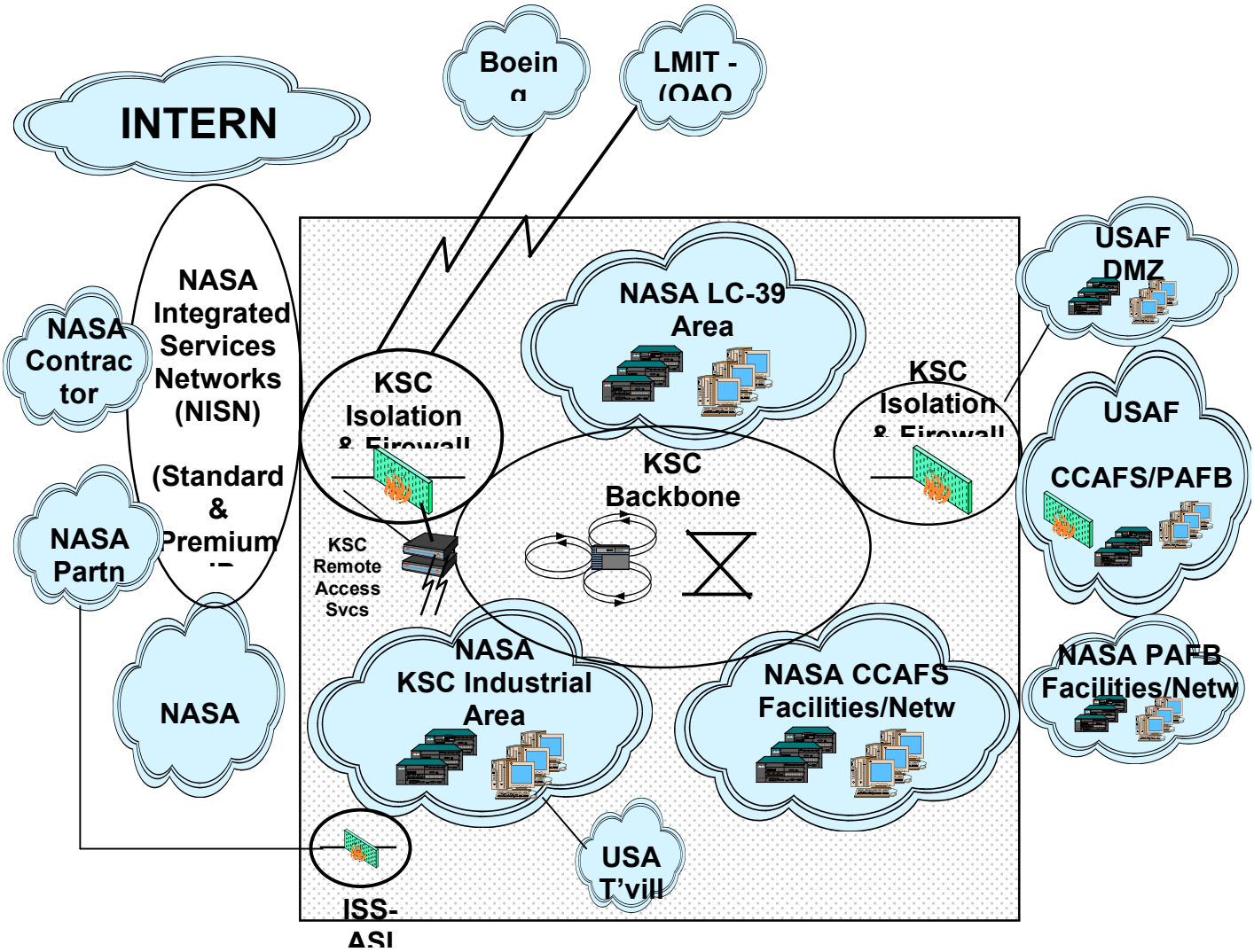

Figure 51

Kennedy Metropolitan Area Network (KMAN)

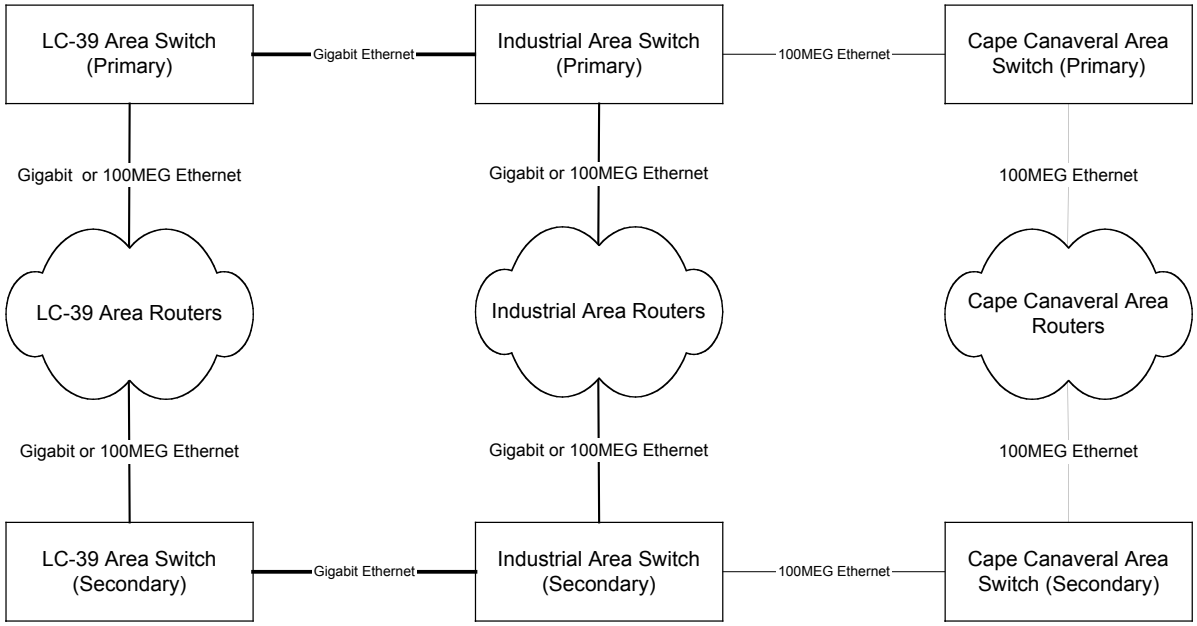

9.3.8 Systems and Support

Configuration and management of almost all of the KNET system is performed by the Consolidated Space Operations Contract (CSOC). CSOC operates an on-site help desk that is manned 16 hours a day, 5 days a week with 24 hours support during launches and critical tests. Cold spares are maintained for all network devices.

CSOC provides security for the KNET. CSOC manages all security related devices including, but not limited to, routers, switches, and network management servers.

9.3.9 Facilities

KSC has over 200 facilities across more than 6000 acres. Most facilities have wiring closets for housing network infrastructure devices. Major wiring facilities maintain proper environment and back-up power. Workspace is also provided to civil servants and contractors who maintain the network. This includes space for the local network operations center.

9.3.10 Technology Flashpoints

Antiquated network devices provide a challenging management problem. The older network objects are dispersed throughout the network and lack many of the features and controls of state-of-the-art devices. An effort is being made to reduce the number of these devices, but sustaining these devices becomes increasingly difficult as time goes by due to the increased chance of failure and the increased difficulty in obtaining replacements.

Inadequate premise wiring and complete documentation provide difficulties in managing and upgrading network system. Security is harder to maintain without an upgraded infrastructure.

Illegal devices on the network provide a management and a security challenge. In spite of NASA policy, many of these devices are connected to the network without permission or waiver. In some cases, lack of infrastructure prevents the installation of supported equipment.

Wireless technology provides a management and a security challenge. Wireless networking is very appealing to users with mobile computers and many illegal devices are connected to the network. However, due to the lack of security in the current open standards, many wireless access points provide an illegal entry point into the network.

9.3.11 Compliance

All networking systems comply with NASA security policies such as NASA NPG 2810. Most network infrastructure device types and software revisions are operations certified. The systems support open standards and off-the-shelf products.

9.3.12 Capabilities

The KNET system supports many capabilities including:
-Ethernet, Fast Ethernet, and Gigabit Ethernet connectivity
-Support for applications including electronic mail, World Wide Web, and remote access
-Dial-up network access
-Voice Over IP (limited)
-Dynamic Host Configuration Protocol
-Domain Name Service
-VPN network access (beta)
-Inter-Center connectivity
-Internet connectivity
-Support for IP (with minimum support for AppleTalk and IPX)

9.3.13 To Be Condition

The "To be" condition is such that all outdated systems are replaced by state-of-the-art switches and wiring. The end state will incorporate access switches that will provide a minimum of 100Mbps switched network to the desktop. This configuration would allow the reasonable use of voice and video over the network infrastructure.

9.3.14 References

NASA NPG 28510 - Security of Information Technology

9.3.15 Video Component

The KSC Visual Imaging and Timing Services network is a broadband and baseband video distribution system that utilizes commercial off-the–shelf hardware to provide launch operations support, research, educational, training, and timing services to KSC and CCAS employees.

9.3.16 As is Condition

The KSC video system consists of several major components supporting various aspects of KSC activities. The following is a brief list of those services:

Photographic Services - Provides still and motion picture film image acquisition and processing for KSC/Shuttle and CCAFS customers, and provides photographic and optical equipment maintenance and repair to NASA and CCAFS participating customers.

Television Services - Provides the live and recorded video feeds that support launch and landing activities, shuttle processing, payloads processing, ISS and cable TV distribution to KSC Users, Customers, and the Media for Public Release.

Timing Services - Provides timing synchronization and count down (T&CD) information to operational users through out KSC.

Production Network Diagrams

Figure 52

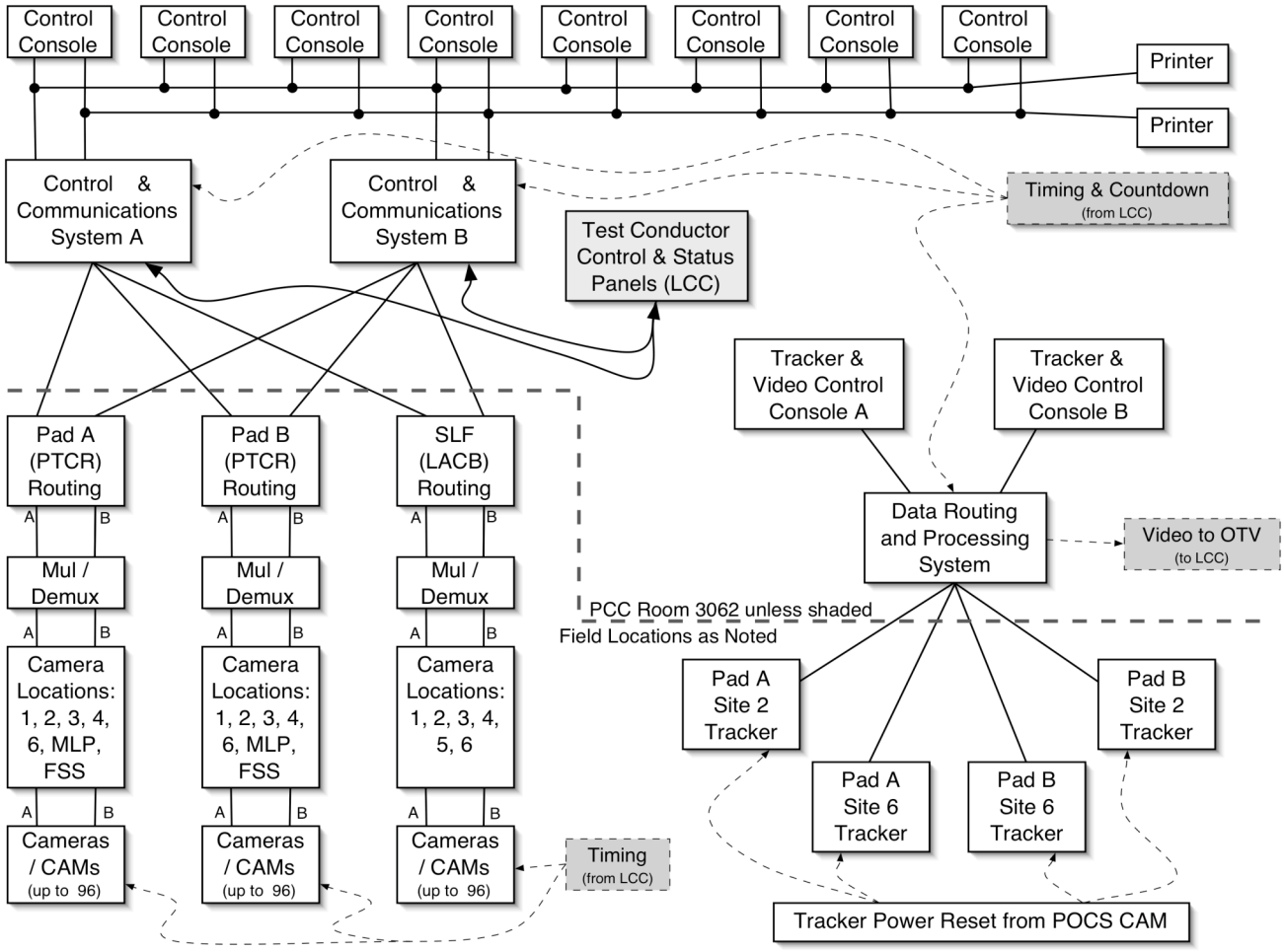

9.3.17 Voice Component

Telephone System Architecture

The KSC Telephone System utilizes off-the-shelf products to provide telephone and voicemail service to the Kennedy Space Center.

9.3.18 As Is Condition

In 1999, a Siemens EWSD Class 5 Central Office with remotes in major buildings and an integrated Centigram Voice Mail system were installed at NASA Kennedy Space Center (KSC). These systems support telephony, voice messaging, video conferencing, and a low-speed data network services for KSC and together comprise the KSC Telephone System. This system supplanted existing analog outdated voice switching systems. While providing all standard telephone capabilities such as extension dialing, local calling and access to the Federal Telecommunications System long distance service (FTS), the EWSD introduced users and organizations to new and powerful features such as E911, transfer, forward, caller ID, message waiting lights, Automated Call Distribution (ACD), Voice Mail, and much more. The EWSD has undergone several software version upgrades and the EWSD is at the next to highest release.

9.3.19 System Description and Operational Concept

Telephony services are provided by the EWSD. The thirteen remotes, in addition to the host, that comprise the telephone system are distributed within thirteen major buildings, or operational areas, such as Pad's A&B. The EWSD and it's remotes are DC powered and receives power from facilities located in or adjacent to each switch room. The Integrated Services Digital Network (ISDN) data feature of the EWSD provides the capability to transmit voice, data and video across the center and off center. The center has a Multi port Conferencing Unit (MCU) which is integrated with the EWSD to provide video conferencing to the center and other government entities, both over Primary Rate Interface (PRI) and Basic Rate Interface (BRI).

Supported end user equipment includes Siemens Optiset ISDN and the majority of stations are CLASS capable analog telephones (with speakerphone) equipment, standard DTMF analog telephone sets, and Polycom Soundstations. Optisets with expansion units are used for telephone operator functions.

Telephone service to the local calling area is delivered through Time Warner Telecom. Domestic and international long distance telephone service is provided via trunks to the FTS2000 network,

System recordings and ACD messages are delivered by Cognitronics digital voice announcers.

Call Detail messages from the EWSD are processed by the EWSD system.

Voice messaging is provided by a Centigram system which is tightly integrated with the KSC EWSD. The Centigram Voice Mail system is located at the EWSD host telephone equipment switch room.

Dial-up modem access to the EWSD are through the Kennedy Unified Dial-in Access (KUDA) to extend access into the data network. This

access supports rates up to 128 kb/s.

KSC has a SecureLogix telephony firewall to protect the voice system from unwanted intrusions. The SecureLogix system is capable of logging and/or blocking any call inbound or outbound and can detect fax or data type calls any time in the call stream by pre-established parameters..

The KSC telephone system also provides a 96-port conference bridge.

KSC operates and maintains it's own full-blown Public Safety Answering Point (PSAP) to handle E911 calls from the Center and CCAFS. This system with it's integrated data base can pin point E911 callers to the exact location where the call originated.

Spare parts for frequently used and major system components are maintained in the NASA Building CD&SC facility.

Detailed Description
Siemens EWSD Class 5 Central Office
48 volt DC-powered
Software release 18
13 remotes
ACD option
CDR feature, delivered on CD
15,000 CLASS analog telephone ports
3599 ISDN ports
18 Two way PRI spans to Time Warner
9 Two way PRI spans to FTS

Centigram Voice Mail System

Latitude Conference Bridge

PictureTel MCU

SecureLogix Telephony Firewall

The EWSD remote hardware (RSU's and RCU's) associated with KSC Telephone System services is housed in thirteen switch rooms across the KSC campus. The remotes are connected by T-1's on SONET or redundant EZT3's links over fiber.

9.3.20 Systems and Support

Configuration and management of the KSC Telephone System is performed entirely by the Outsourced Desktop Initiative for NASA (ODIN) contract. ODIN operates an off-site help desk 24 hours a day, 7 days a week, and ODIN personnel also provide on-site technical support from 6am to 6pm on business days. The ODIN contract specifies 4-hour return-to-service for

infrastructure components, and ODIN maintains a spares inventory of frequently used and major system components.

9.3.21 Facilities

Wiring space is maintained for housing the telephone infrastructure in all KSC facilities. The CD&SC facility houses the host components of the EWSD switch. Telephone system maintenance personnel are provided workspace in the CD&SC and the Operations Support Building (OSB). The major wiring facilities/switch rooms, in the aforementioned buildings, are maintained with the proper environment and at least 8 hours of emergency power.

9.3.22 Technology Flashpoints

Aside from a significant natural disaster, there are no other concerns.

VoIP is the leading technology to replace the existing telephone system. KSC has recently installed a 300+ station VoIP system in a new KSC/State of Florida R&D facility. Technology convergence is being monitored and when the economics can justify the migration to VoIP, KSC intends to have the hands on experience to capitalize on that technology.

9.3.23 Compliance

The current telephony system is compliant with NASA security policies. The telephony software is maintained at the highest level possible for the existing hardware platform. The SecureLogix system provides access limitation for security purposes to the lowest common denominator in a multiplicity of variables.

9.3.24 To Be Condition

No firm plans to replace the existing telephony system.

References

http://www.Siemens.com
KSC on-line EWSD documentation

9.3.25 Messaging and Collaboration Component

<u>Electronic Mail System Architecture</u>

KSC Electronic Messaging infrastructure is a loosely organized collection of Microsoft Exchange Systems, Sendmail Servers, and Unix workstations running sendmail. Centralized

services are provide by the Syntegra Mail*Hub including mail routing and X.500 Directory Services. There are over 14,000 users at KSC will e-mail capability.

9.3.26 As is Condition

KSC messaging architecture is fragmented and complex with minimum central control. Each contract is allowed to provide, operate, maintain, and manage their own separate mail system. In-bound and out-bound messages are controlled by the operating organization and addressing conventions are inconsistent. Organizations provide user names and address to the X.500 Directory which provides centralized user address resolution. The preferred mail routing is for all outbound messages to delivered through the Syntegra Mail*Hub where the address is re-written to the center standard format (*FirstName.LastName-1*@ksc.nasa.gov) for everyone except Civil Servants which get the OneNASA address style (*FirstName.I.LastName*@nasa.gov). Replies to or new messages addressed to the standard address formats will be delivered back to KSC through the Mail*Hub. The front-end system provides message routing and some virus protection through denial of delivery for certain file types. Virus protection is provided at the individual mail system and the product varies but most use Norton for Exchange. Mail clients are predominately Outlook but the version varies from system to system. There is no standard client for the Unix based systems. Over ninety percent of the 14000 users at KSC have Outlook clients with Exchange servers on the back-end.

9.3.27 Systems description and Operational Concept

KSC provides a well know entry point for mail, the Syntegra Mail*Hub (Kmail), that resolves addresses and re-routes mail to the proper servers. The primary system configuration at KSC is Microsoft Exchange Server (10 separate sites) with Outlook Clients on the desktop. There are numerous Unix systems providing mail support to applications and small numbers of users with POP or Web clients for mail access. Users access their mail though MAPI, POP, IMAP or Web clients based on their needs and location. External access is limited to Web based access for security reasons. Kmail provides the X.500 Directory services that support PKI, address/name resolution, and address re-writing.

9.3.28 Systems and Support

The Outsourced Desktop Initiative for NASA (ODIN) contract performs configuration and management of the Email system. ODIN operates an on-site help desk that is manned from 6 a.m. to 6 p.m. during business days. It operates an off-site help desk 24 hours a day, 7 days a week.

Contractors provide their own support and it varied according to their needs. Data backups and restoration services are provide by each system with disk mirroring utilized by some to minimize data loss.

9.3.29 Facilities

In most cases Email systems are located in server rooms properly equipped with back-up power and appropriate HVAC. Workspace is also provided to civil servants and contractors who maintain and administer the systems.

9.3.30 Technology Flashpoints

KSC's lack of consolidation in the messaging architecture prevents timely, reliable delivery of mail to all users. Each contractor is allowed to operate without center-wide management controls for release levels, virus definition updates, message content, or message routing.

Inconsistent updating of the X.500 Directory data causes problems in delivery. Organizations are asked to provide daily update of user addressing data but many organizations provides update only when pressured. These infrequent updates mean that we are unable to depend on our mail system to contact every person with important news including emergency notices.

9.3.31 Compliance

The Email system complies with NASA security policies such as 2810. It also complies with NASA standard 2815, NASA Electronic Message Architecture, Standards and Products.

9.3.32 Capabilities

The Email System supports many capabilities including

- SMTP
- MIME/SMIME
- MAPI
- POP
- IMAP
- Fuzzy lookup
- ph server
- finger server
- whose server
- Web access to directory
- Webmail access
- Auto forward
- Single message size limit of 20 megabytes
- Remote access through dial-in service
- Backup/Restore information store for disaster recovery
- Backup/Restore programming and system logs
- Password grooming
- Ability to block spam on some systems
- Ensured delivery, troubleshooting logging

- System monitoring

9.3.33 To Be Condition

Plans are in work to consolidate services but it will take a long time to implement due to contract language issues.

10 Langley Research Center (LaRC)

10.1 Computing Services Segment

10.1.1 Desktop Hardware and Software Component

The Langley desktop environment consists of a variety of hardware, operating systems, and software, utilizing network services to perform functions such as: research, business management, document production & management, communications, and education.

10.1.2 As is Condition

The desktop systems can be divided into two major categories: interoperable and legacy systems. Interoperable systems are those that provide the end user with business and administrative tools necessary to complete duties associated with their position. Legacy systems include all systems running specialized software necessary to support the unique missions of Langley Research Center.

Acquisition and maintenance of the desktop systems is accomplished through civil service workforce efforts or contractor provided services. The primary source for desktops at Langley is the Outsourced Desktop Initiative for NASA (ODIN) contract, which covers approximately one third to Langley's more than 6000 desktop systems. ODIN provides end users with a standard desktop system, a centralized help desk, and a standard software load, which includes common business, administrative, and security software on Macintosh, Windows, and Unix operating systems. ODIN also manages the local area network to which all of Langley's desktop systems are connected.

The following provides an estimated breakdown for the desktops by operating system:

1/3 Unix (IRIX, SunOS, Solaris, Linux, HP-UX)
1/3 Macintosh (OS 7.x through OS X)
1/3 Microsoft (DOS through Windows XP)

The Unix and Macintosh systems operate for the most as independent devices, relying on local (on device) authentication and control. While the Microsoft devices are operate in a mix of local and centralized authentication and control, managed through Langley's 200+ workgroups and domains. The center does have a central Windows 2000 domain (larc.nasa.gov), which manages the majority of the ODIN customer accounts.

10.1.3 Systems description and Operational Concept

All Langley's desktop systems consist of commercially available hardware, operating systems and software that provide the workforce with data processing, storage, transmission, protection (backup & anti-virus), and security (intrusion, theft & tampering safeguards) necessary to complete their assigned duties. For those desktops covered under the ODIN contract, the details of how the desktops are configured and supported are contained in the ODIN Delivery Order L – 70717D. Desktops not provided by ODIN are configured and supported by support service contracts and/or civil service personnel. These desktop systems do have to conform to NASA standards/requirements pertaining to IT security and desktop system back up.

10.1.4 Systems and Support

The means for acquiring desktop systems and support are determined by the end user. This allows the individual/organization to select the best solution to meet the primary mission of research. At a minimum the system should:

Comply with NASA-STD-2804 & 2805
Be protected by the central wide Anti-virus software
Be supported by a qualified Administrator, who will:
Maintain OS and software patches
Ensure system and network access security
Perform and verify routine backups

10.1.5 Facilities

Safety, cooling, electrical and space requirement are the responsibility of the end users/organization and should comply with all equipment manufacturer and NASA specifications.

10.1.6 Technology Flashpoints

The ease of obtaining hardware, operating systems, software and patches, both commercially and via the internet, in conjunction with, users having full or limited administrative control over their systems, makes it difficult to assure/maintain system integrity and has the potential to compromise the best security efforts.

Lack of clear guidance on account management and user authentication --and a means to enforce it-- is hindering the effort to have an effective system for desktop administration and contributes to factors that weaken network security.

10.1.7 Compliance

Custom applications and configurations are highly discouraged. All systems should comply with NASA-STD-2814, 2805 & 2804 where possible.

10.1.8 Capabilities

Due the vast number of vender and contract vehicles desktop system capabilities are greatly varied and hard to define.

10.1.9 To Be Condition

All ODIN desktop system configurations will be managed through a center provided configuration management tool called Marimba Desktop/Mobile Management. This tool will also be available to all other system managers in an effort to reduce desktop vulnerabilities.

10.1.10 References

NASA-STD-2814, 2805 & 2804
NPD 2810

10.2 Application Services Component

10.2.1 Introduction

Langley application services include three categories: (1) IT Support for the NASA Scientific and Technical Information (STI) Program, (2) Langley business and web-based applications, and (3) Langley geometry modeling and data visualization services.

10.2.2 As is Condition

<u>IT Support for the NASA Scientific and Technical Information (STI) Program</u>

The NASA Center for AeroSpace Information (CASI), under the auspices of the Agency-wide Scientific and Technical Information (STI) Program, supports the review, capture, collection, organization, and dissemination to NASA, its contractors and grantees, and the public of NASA-

sponsored and -funded scientific and technical information. It also collects U.S. and worldwide STI that is pertinent to NASA's current and future missions. To support its mission, NASA CASI uses computer systems, database systems, a content management system, mass storage technology, scalable software, associated hardware and backup systems. Serving NASA employees, contractors and grantees, and external users, the recent upgrades to the CASI systems allow NASA to provide its STI to the users' desktops in electronic formats. Information is collected from 10 NASA Centers and Headquarters, other U.S. sources, and numerous foreign countries to provide one of the world's largest aerospace-related information databases.

Langley business and web-based applications

Business and administrative applications support human resources, asset management, procurement, security, safety and mission assurance, and logistics management. The operational environment consists of a Central Business and Administrative Computing Center (CBACC). The Center operates as one of the remote sites of the NASA ADP Consolidation Center (NACC) located in Marshall Space Flight Center (MSFC) in Huntsville, Alabama.

The Langley business and administrative applications software portfolio consists of both Agency standard systems (host based), developed under the NASA Automated Information Management (AIM) Program and unique Langley applications (both host based and distributed) developed and maintained by Langley. The Consolidated Information Technology Services (ConITS) contract maintains existing business and administrative application software to conform to changes in equipment or operating systems, to comply with new regulations or laws governing the Agency's business data processing, to correct software errors, or to enhance or improve the functional capability of the applications. Langley also facilitates the development, upgrade and maintenance of WWW sites and web-based applications in support of the Center's organizations, teams, programs, projects, and initiatives. Langley has partnered with the ConITS contract to provide end-to-end services to the customer ranging from consultation and development to customer training and maintenance. The contractor develops, implements, and maintains computer security controls and procedures necessary to prevent unauthorized access to business and administrative computer resources.

Langley geometry modeling and data visualization services

The Data Visualization and Analysis Laboratory (DVAL) and the Geometry Laboratory (GEOLAB) are facilities maintained and to provide centralized capabilities for research support at Langley. DVAL provides a capability for enhancing, visualizing, interpreting, and exploring experimental and computational datasets from a variety of disciplines in support of Langley programs and projects. Highly skilled specialists working with state-of-the-art hardware and software can produce effective data visualizations and custom solutions. Products are developed for distributed platforms, ranging from laptops and desktops to fully immersive environments. DVAL projects support many phases of the project life cycle, including concept development, project advocacy, mission design and analysis, real-time flight visualization, and post-processing. The Geometry Laboratory (GEOLAB) provides a capability for the development of surface and volume grids about aerospace configurations as required for many computational fluids and structures applications. GEOLAB was created to develop the tools, techniques, and

expertise to streamline the geometry modeling and grid development process, and to provide an effective resource to meet the multitude and variety of grid geometry requirements at Langley. The GEOLAB provides and maintains expertise in both structured and unstructured grid generation techniques; supports a capability in the state-of-the-art surface modeling techniques using a broad variety of CAD software; investigates and applies methods to construct high fidelity surfaces from data acquired by digital scanners; and develops necessary tools and interfaces to integrate the use of geometry tools into analysis software tools. The capabilities available in the GEOLAB eliminate the requirement for individual researchers to be geometry experts and enable them to concentrate on other aspects of the solution process.

10.2.3 Systems and Support

Langley business and web-based applications, geometry modeling and data visualization services are provided through the Consolidated Information Technology Services (ConITS) contract, which is an award-fee task-based contract.
The Agency STI Program services are provided primarily by an 8(a) Tribal-Owned Small Disadvantaged Business at the NASA Center for Aerospace Information.

10.2.4 To Be Condition

The geometry modeling and data visualization computing environment must migrate away from high-end specialized computers to commodity off-the-shelf personal computers. This migration is being driven by rising computer hardware maintenance costs, shifts in support provided by the commercial software vendors towards PC platforms, and the rapid increase in PC computing speeds and graphics display capabilities. This migration is necessary to maintain services and build new capabilities while controlling costs. Within the next 24 months, it is expected that the existing DVAL/GEOLAB high-end computers and associated software will be replaced with PC and MAC hardware and software.

10.3 Data Center Component

<u>Mass Storage Device Architecture</u>

The LaRC's general-purpose mass storage service is provided by the Distributed Mass Storage System (DMSS). This system is available to civil servants and contractors at LaRC and other NASA centers. It is used for various data requirements that encompass archive, system backup repositories and extended desktop or server storage.

10.3.1 As is Condition

DMSS's current configurations are as follows:

Hardware:
1 IBM F50 server
1 IBM H80 server
1 Sun Ultra 10 server
3 StorageTek (STK) 9310 Robotic Silos
6 Timberline tape drives
8 9940-A tape drives
6 9940-B tape drives
2.5 Terabytes (TB) STK D200 Fibre Channel (FC) disk array system
2 SILKWORM 3800 FC Switch

Software:
HPSS: A Hierarchical Storage Management software marketed by IBM
DCE: The Distributed Computing Environment software marketed by IBM
Encina: A DCE application used by HPSS, marketed by IBM
SAMMI: a software used by HPSS, marketed by Kinesix
ACSLS: tape library management software marketed by STK

Network
Internal Fibre Channel Network connecting the tape drives, disk array systems and HPSS servers
External GigE connection to the LaRC Local Area Network (LaRCNet)
Systems description and Operational Concept

The DMSS is a highly scalable and distributed mass storage system using the HSM called HPSS. The HPSS server components are distributed between two IBM RS/6000 servers. The storage media consist of a 2.5 TB of Fibre Channel disk array system, a potential 3.4 Petabytes (PB) of tape storage in the StorageTek 9310 Robotic Silo using Timberline and 9940A and 9940B tape technologies. The system has 133 Terabytes of user data and 3.8 million files. It currently handles 2-4 terabytes of data traffic a week coming from around 450 workstations and servers. HPSS's potential for growth is among the highest, if not the highest in the storage industry, in terms of the total number of files, total storage capacity, total data traffic, total concurrent accesses and high performance access capability. Employing this software architecture allows us to face up to the data challenges that the information age brings to aerospace and earth sciences researches and business process of the Center and Agency.

The requirements for DMSS operation are:
-24x7 availability for the production system except for scheduled outage for holidays, severe weather conditions, system upgrades, hardware preventive maintenance and system maintenance requiring quiescence
-Automation of system monitoring as much as possible
-Maintenance of a small secondary system for system problem investigations, system upgrade preparations, software developments and new feature explorations
-An effective central point of contact for system problem reporting or user requests
-The maintenance of a web-page for current DMSS information
-System report provision that encompasses traffic, storage utilization and accounting

-System security provision that encompasses computer security and the physical and environmental soundness of the servers and storage areas
-Disaster recovery provision that includes the documentation, the periodic testing and verification of the method, and the daily maintenance of tasks to accomplish this capability
-Software development for user interface, system administration, or special project requirements
-Maintenance of a high level of expertise to strategize on storage services and to address users storage requirements from desktop to mass storage

10.3.2 Production DMSS Diagram

Figure 53

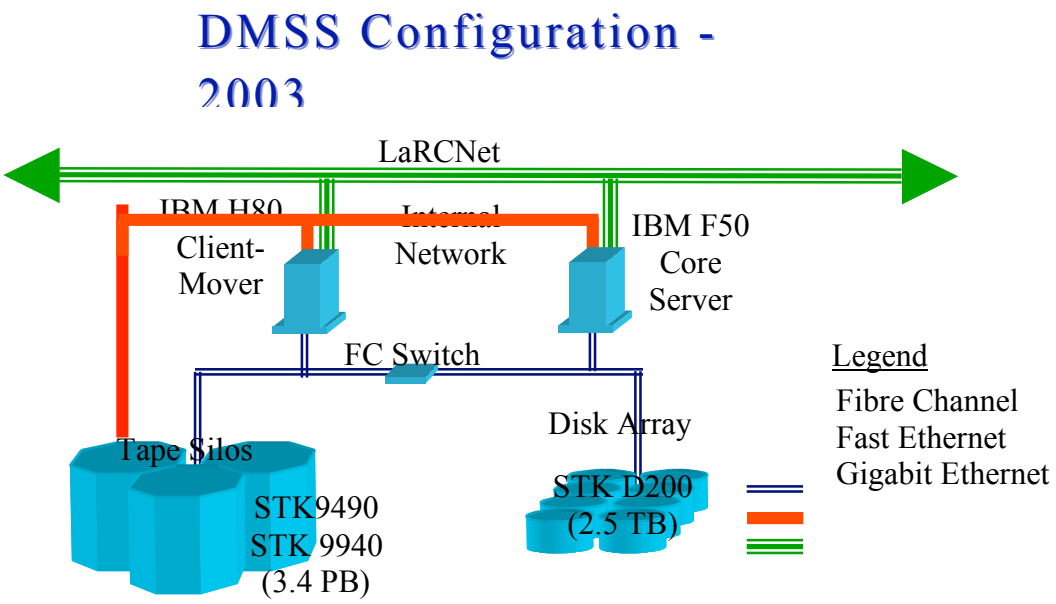

10.3.3 Systems and Support

Configuration, management and user services of the DMSS are performed by the Consolidated Information Technology Services (ConITS) contract at LaRC. ConITS support team operates the system 24 hours a day and 7 days a week. The system administration team is on-site during prime shift, perform periodic remote monitoring during 2nd and 3rd shifts of weekdays and all three shifts on weekend, and are on-call during non-prime shifts on need basis. The contract calls for a 2-hour response time during prime shift and 4 hours for non-prime time.

10.3.4 Facilities

The DMSS facility is environmentally controlled by environment monitoring and physically controlled by electronic key access. Access permissions, user registration, user revalidation, password aging and firewall control the data in it.

10.3.5 Technology Flashpoints

The HPSS software used by DMSS has a small but most performance-demanding customer base consisting of mostly national supercomputing centers, high-energy research laboratories and weather prediction facilities. The server platform and storage technologies supported gear toward high performance, thus the variety are limited. However, the strategy for IBM for HPSS is to address this issue and to expand their user base. Current plan is to support Linux platform and peripherals supported by Linux boxes.

10.3.6 Compliance

DMSS system complies with NASA security policies such as NPG 2810 and has passed the Agency's Security Audit of 2000 as a Scientific, Engineering and Research (SER) system.

10.3.7 Capabilities

The DMSS system supports capabilities including:
-Data archive for Center/Agency research data and IT service data
-Extended desktop and computation server storage
-Data repository back ending NASA's information systems such as for wind tunnel testing and data analysis
-Campus system backup repository
-Disaster recovery data repository for IT services (due to all second copy data being sent to off-site secure site)
-Temporary and permanent data sharing repository for projects

10.3.8 To Be Condition

The DMSS is in a position to need no storage technology upgrade for a while, since the current tape technology, the StorageTek 9940B with 200GB tape cartridges, expand the total capacity of the system to 3.4 Petabytes. At 1.5X growth rate the system usage will be at 1 Petabyte in 5 years; at 2X growth rate the system usage will be at 4 TB in 5 years. Current trend is more toward the former. Near term expansion are likely disk cache expansion based on storage and access performance requirements increased due to the network infrastructure upgrade.

10.3.9 References

NPG 2810 Security of Information Technology

10.4 Communications Segment

10.4.1 Wide Area Network Component

The Langley-managed wide area network (WAN) utilizes off-the-shelf products to provide standards-based connectivity for devices requiring off-Center connectivity to other NASA Centers and to the Internet.

10.4.2 As is Condition

The WAN connects to the local area network (LAN) via a security perimeter network referred to as the "Isolation Network". The Isolation Network utilizes a combination of copper and fiber media. The core of the network uses FDDI. However, it is being upgraded to switched Ethernet. Most traffic is Internet Protocol (IP) based with very little DECNet connectivity to Goddard Space Flight Center.

10.4.3 Systems description and Operational Concept

Two service providers connect to the Isolation Network, NASA Integrated Services Network (NISN) and Cox Communications. NISN provides two types of services, Standard IP (SIP) and Premium IP (PIP). NISN's SIP service provides routes to a limited number of Internet and Internet 2 sites. NISN's PIP service provides routes to other NASA Centers and has the capability to route to the Internet. Those routes not provided by NISN are provided by Cox Communications. The traffic flow is distributed approximately 50% Cox, 40% NISN SIP, and 10% NISN PIP.

The LAN connects to the Isolation Network at two points. One is the connection to the Public Network. This is a network that is front-ended by a screening router and allows connectivity to and from special projects devices. The second location is the Center firewall network. The Center firewall protects the general production networks by limiting the origination of connections to and from certain ports and IP addresses.

Center policy designates the Network and Computer Services Branch (NCSB), under the Office of the Chief Information Officer, as the sole managing agent for the production networks. This includes the accountability for cabling, electronics, and security of WAN devices managed by Langley. These policies are outlined in LAPD 2400.3 and LAPD 2810.2.

10.4.4 Production Network Diagram

Figure 54, Langley Isolation Network diagram

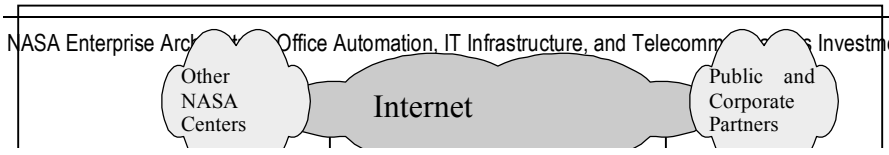

10.4.5 Systems and Support

Configuration and management of all of the Langley-managed WAN systems is performed by the Outsourced Desktop Initiative for NASA (ODIN) contract. ODIN operates an on-site help desk that is manned from 6 a.m. to 6 p.m. during business days. It operates an off-site help desk 24 hours a day, 7 days a week. The contract calls for a 4 hour return to service during business hours. Cold spares are maintained for all network devices.

Security on the Isolation Network is provided by the Consolidated Information Technology Systems (ConITS) contract. ConITS manages all security-related devices including, but not limited to, firewalls, virtual private networks (VPNs), and intrusion detection systems.

10.4.6 Facilities

Wiring space is maintained for housing network infrastructure devices. Isolation Network facilities maintain proper environment and back-up power. Workspace is also provided to civil servants and contractors who maintain the network. This includes space for the local network operations center.

10.4.7 Technology Flashpoints

Antiquated network devices provide a challenging management problem. Implementation of a switched Ethernet architecture has begun and should be completed in the next 6 months. During that time, FDDI devices will be supported.

10.4.8 Compliance

All networking systems comply with NASA security policies such as LAPD 2810. Langley-supported network infrastructure device types and software revisions are production certified using a SmartBits tester. The systems are Y2K compatible. The systems support open standards and off-the-shelf products.

10.4.9 Capabilities

The WAN system supports many capabilities including:
- Ethernet, Fast Ethernet, and gigabit Ethernet connectivity
- FDDI connectivity
- Inter-Center connectivity
- Internet connectivity
- Routing for IP and DECNet

10.4.10 To Be Condition

The "To be" condition is such that the Isolation Network will utilize switched Ethernet to interconnect the WAN providers to the security perimeter and the LAN. The end state will incorporate routing switches to maintain routing. A firewall will be placed in front of the Public Network in order to reduce security risks on its networks. A firewall will also be placed on the Isolation Network to support Earth Observing Systems (EOS) data flows.

10.4.11 Referenced Documents

LAPD 2400.3 - Langley Research Center Computer Networks and Data Communications
LAPD 2810.2 - Minimum Information Technology Security Requirements for LaRCNET

10.5 Local Area Network Component

The Langley managed local area network (LAN) utilizes off-the-shelf products to provide standards based connectivity to over 12,000 research, support, and infrastructure devices. The LAN, referred to locally as LaRCNET, is Langley's only research and business network serving the over 4,000 employees and visitors on the center.

10.5.1 As is Condition

LaRCNET utilizes a combination of media that includes copper, fiber, and optical wireless.

The following describes the breakdown of connections and media.
-50% of connections Category 5E copper
-45% of connections Category 3 copper
-5% of connections single or multimode fiber
-Optical wireless composes much less than 1%

The network services 12,300 nodes. The breakdown of the node types follows.
-5,400 PC/Windows desktops and servers
-2,000 Apple/Mac desktops and servers
-2,100 Printers
-700 Network Infrastructure devices
-2,100 Other desktops and servers

Desktop bandwidth capability is provided at the following ratios.
-46% at 10 Mbps
-52% at 100 Mbps
-2% at 1000 Mbps

Optic

The primary media access technology is Ethernet with a small and decreasing percentage of Fiber Data Distributed Interface (FDDI). Most routable protocols are supported including Internet Protocol (IP), AppleTalk, DECNet, and Internetwork Packet Exchange (IPX). These allow for a wide array of applications that support the user's requirement for electronic messaging, data streaming, file sharing, and file storage.

10.5.2 Systems Description and Operational Concept

The core of LaRCNET is the Ethernet backbone network. The backbone is based on four high performance routing switches that interconnect at 1 Gbps. The interconnections can be upgraded to 40 Gbps to meet future demands. The four switches are located strategically in order to distribute the data load and segment local data traffic. The core switches connect to distribution switches via gigabit Ethernet connections. The distribution switches exist primarily at the building level. These switches also act as access switches making the architecture a collapsed distribution/access design. The access level of the network is a combination of switched Ethernet at 10 and 100 Mbps and shared Ethernet 10 Mbps hubs. Aside from the Ethernet backbone, an FDDI backbone exists that connects into the Ethernet backbone. The FDDI backbone supports less than 4% of the total number of connections at Langley.

Wide area connectivity is provided by several means. The NASA Integrated Services Network, NISN, and a commodity provider, Cox Communications, provide inter-Center and Internet connectivity. Short-haul connectivity to research partners is provided via Fast Ethernet, Ethernet, and T1. Dial-up connectivity is provided via two ISDN PRI lines that allow 46 simultaneous connections. Client-to-Network VPN service is also available.

Four security zones are recognized. The "open" networks are those networks whose management is shared with Langley. These are high-risk connections that include Internet and Inter-Center connections. The "public/de-militarized zone (DMZ)" networks are those networks that are partially secure and are only somewhat more secure than the open networks. The "general production" networks are those that reside behind the Center's primary firewalls. These networks are considered low-risk and are where most devices reside. Finally, there are the special projects and wind tunnel networks. These networks either do not connect to the general production network or connect to the general production network via a dedicated firewall.

Center policy designates the Network and Computer Services Branch (NCSB), under the Office of the Chief Information Officer, as the sole managing agent for the production networks. This includes accountability for cabling, electronics, and security. These policies are outlined in LAPD 2400.3 and LAPD 2810.2.

10.5.3 Production Network Diagrams

Langley general network diagram. The Isolation Switch/Router is currently an FDDI ring. Target transition is July 2003.

Figure 55

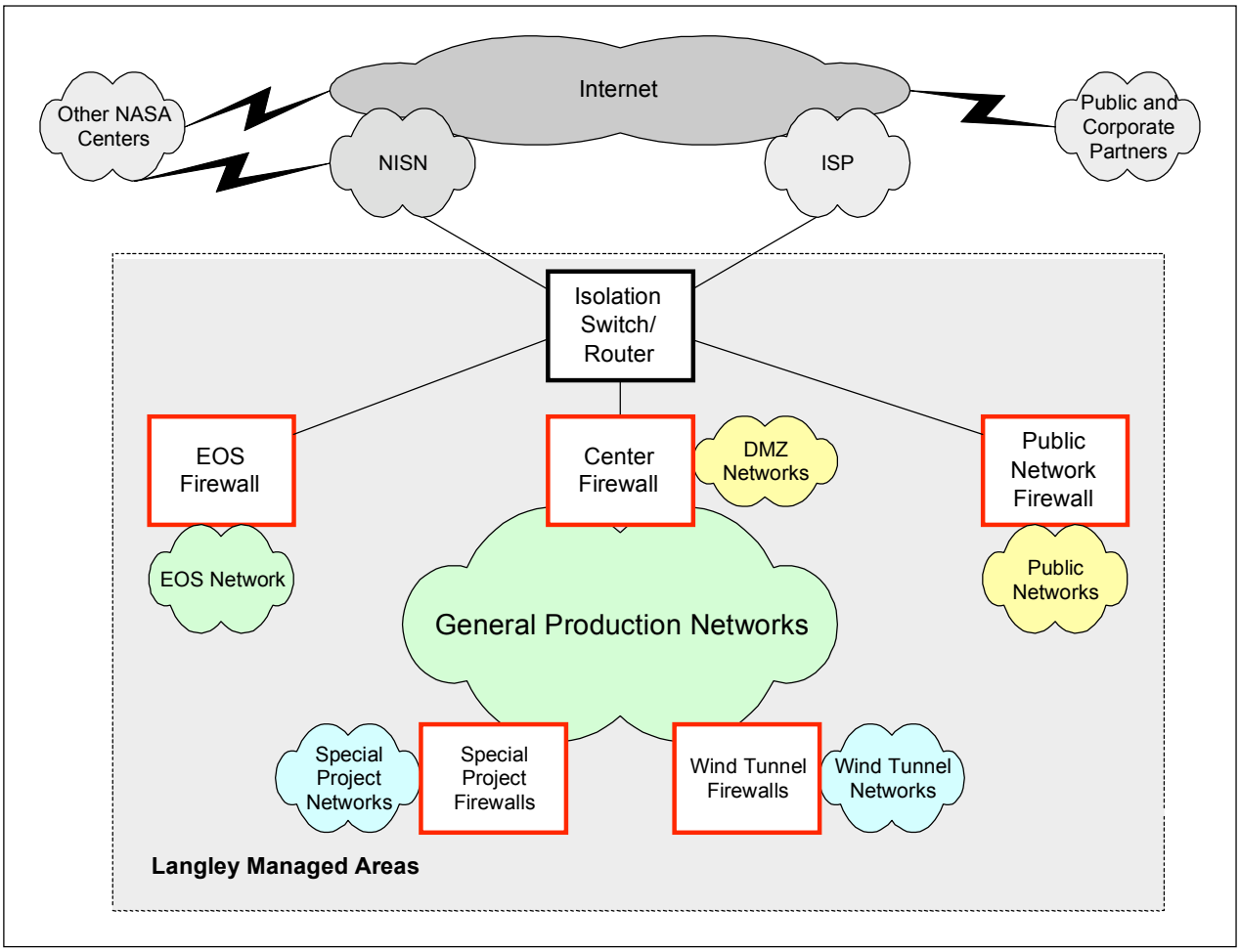

Figure 56, Langley Ethernet backbone.

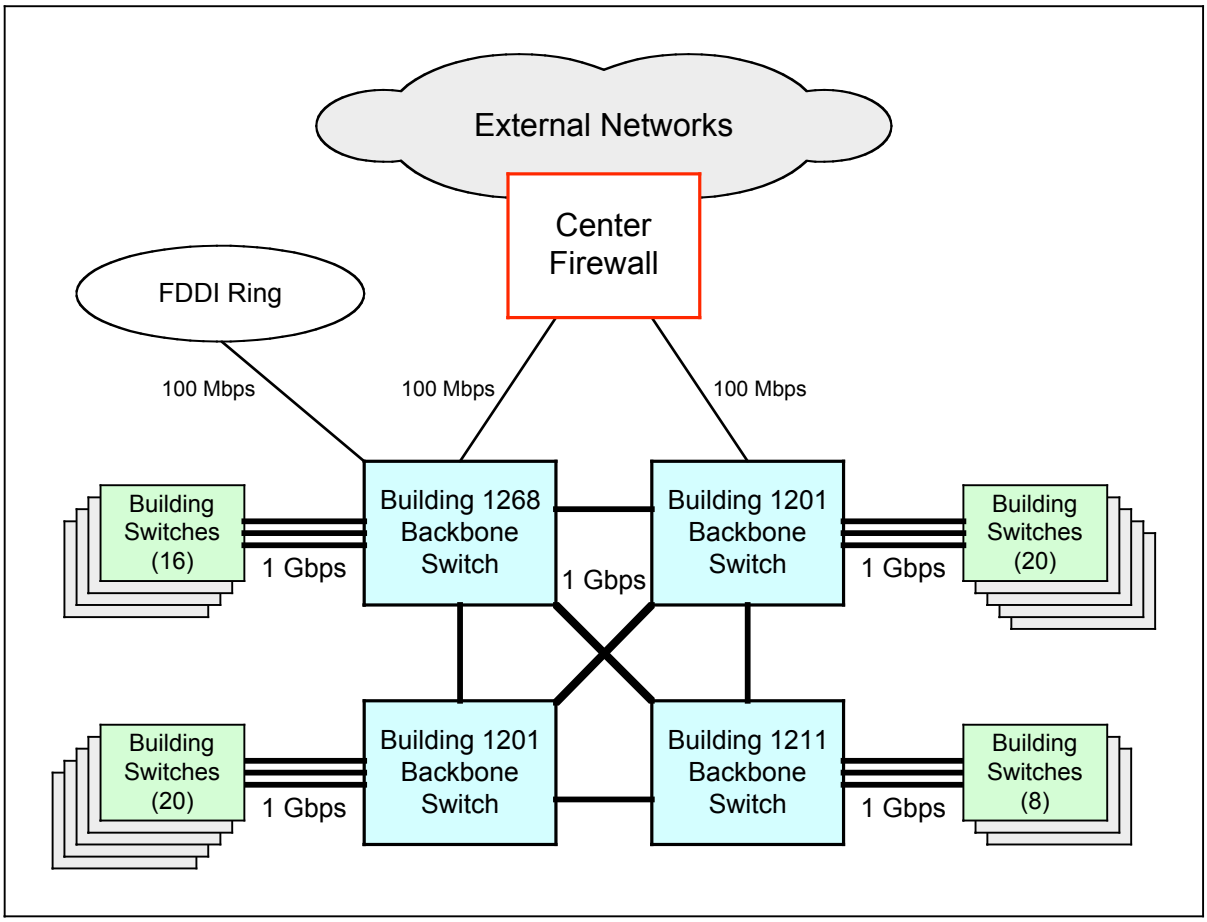

10.5.4 Systems and Support

Configuration and management of almost all of the LaRCNET system is performed by the Outsourced Desktop Initiative for NASA (ODIN) contract. ODIN operates an on-site help desk that is manned from 6 a.m. to 6 p.m. during business days. It operates an off-site help desk 24 hours a day, 7 days a week. The contract calls for a 4 hour return to service during business hours. Cold spares are maintained for all network devices.

Security is provided by the Consolidated Information Technology Systems (ConITS) contract. ConITS manages all security related devices including, but not limited to, firewalls, virtual private networks (VPNs), and intrusion detection systems.

10.5.5 Facilities

Wiring space is maintained for housing network infrastructure devices. Major wiring facilities maintain proper environment and back-up power. Workspace is also provided to civil servants and contractors who maintain the network. This includes space for the local network operations center.

10.5.6 Technology Flashpoints

Antiquated network devices provide a challenging management problem. These objects are dispersed throughout the network and lack many of the features and controls of state-of-the-art devices. An effort is being made to reduce the number of these devices, but sustaining these devices becomes increasingly difficult as time goes by due to the increased chance of failure and the increased difficulty in obtaining replacements.

Illegal devices on the network provide a management and a security challenge. In spite of NASA policy, many of these devices are connected to the network without permission or waiver. In some cases, lack of infrastructure prevents the installation of supported equipment.

Wireless technology provides a management and a security challenge. Wireless networking is very appealing to users with mobile computers and many illegal devices are connected to the network. However, due to the lack of security in the current open standards, many wireless access points provide an illegal entry point into the network.

10.5.7 Compliance

All networking systems comply with NASA security policies such as LAPD 2810. Most network infrastructure device types and software revisions are production certified using a SmartBits tester. The systems are Y2K compatible. The systems support open standards and off-the-shelf products.

10.5.8 Capabilities

The LaRCNET system supports many capabilities including:
- Ethernet, Fast Ethernet, and gigabit Ethernet connectivity
- FDDI connectivity
- Support for applications including electronic mail, World Wide Web, and remote access
- Dial-up network access
- VPN network access
- Inter-Center connectivity
- Internet connectivity
- Support for IP, AppleTalk, DECNet, and IPX

10.5.9 To Be Condition

The "To be" condition is such that all outdated systems are replaced by state-of-the-art switches and wiring. The end state will incorporate switches into the access level in a collapsed core and distributed/access architecture. Access switches will provide 100 Mbps to 1 Gbps of bandwidth per devices. A routing protocol supporting variable length subnet masking will be used to segment the network into IP subnet domains. This will allow for the reasonable use of voice and video over the shared infrastructure.

10.5.10 Referenced Documents

LAPD 2400.3 - Langley Research Center Computer Networks and Data Communications
LAPD 2810.2 - Minimum Information Technology Security Requirements for LaRCNET

10.6 VOICE Component

10.6.1 Telephone System Architecture

The LaRC Telephone System (LaTS) utilizes off-the-shelf products to provide telephone and voicemail service to the Langley Research Center campus.

10.6.2 As Is Condition

In 1989, a ROLM 9751 Computerized Branch Exchange (CBX) and an integrated ROLM PhoneMail system were installed at NASA Langley Research Center (LaRC). These systems support telephony, voice messaging, and a low-speed data network services for LaRC and together comprise the LaRC Telephone System, or LaTS. The LaTS supplanted existing Centrex telephone services from Verizon and the campus wide MICOM, Inc. (MICOM) low-speed asynchronous data switching facilities. While providing all standard telephone capabilities such as extension dialing, local calling and access to the Federal Telecommunications System long distance service (FTS), the CBX introduced users and organizations to new and powerful features such as transfer, forward, name display, Automated Call Distribution (ACD), PhoneMail, and much more. Since initial installation, hardware upgrades to the CBX include 70MB hard disk drives and Turn-Around Motherboards (TAMA/TAMB) that facilitate error free CPU switchovers. Hardware upgrade to the PhoneMail system includes the conversion from Release 3 to Release 4. The CBX and PhoneMail have undergone several software version upgrades and the CBX is at the highest release available for Release 9004 and the Phonemail is at the “next to highest” in Release 4.

10.6.3 System Description and Operational Concept

Telephony services are provided by the ROLM 9751 CBX with software release 9004.4.38. The thirteen nodes that comprise the telephone system are distributed within three buildings, or telephone switch rooms. The CBX is DC powered and receives power from facilities located adjacent to each switch room. The ROLM data feature of the CBX provides the backbone of a low-speed data switching network, however, the ROLM data feature is not widely used.

Supported end user equipment includes ROLM RP120/D, RP240/D, RP400/D, ADCM and RMDCM telephone and data station equipment, standard DTMF analog telephone sets, and a few dozen DTMF analog speakerphones, primarily Coherent Conference Masters and Polycom Soundstations. ROLM model 9755 attendant consoles are used for telephone operator functions.

Telephone service to the local calling area is delivered through Verizon. Domestic long distance telephone service is provided via trunks to the FTS2000 network, and international long distance service is provided via AT&T. AT&T is also utilized for domestic long distance telephone service when FTS service is unavailable or down.

System recordings and ACD messages are delivered by Interalia model MMU2 digital voice announcers.

In the event of a catastrophic telephone system failure, bypass telephones are activated. Bypass telephones provide a direct connection to the local carrier. The activation of the bypass telephones is automatic and is controlled by Gordon Kapes model BP2-24 Power Failure Transfer Units.

Call Detail messages from the CBX are processed by an ISI Infortext, Inc., OS Plus Call Accounting System.

Voice messaging is provided by a ROLM Release 4 PhoneMail system which is tightly integrated with the LaRC ROLM CBX. The software level is 4.2.2.1. The multi-node LaRC PhoneMail system is comprised of six nodes located within two telephone equipment switch rooms. There is a NISN-provided toll-free telephone number for toll-free access into PhoneMail.

Dial-up modem access to the ROLM CBX low speed data switching network utilizes Racal Vadic model RMD 3264 and Telebit Trailblazer modems. The modems are connected to ROLM rack-mounted data communications modules (RMDCM) to extend access into the data network. This
access is rarely used anymore, since it supports rates only as high as 9600 baud.

The emergency announcement system utilizes an Interalia model MLU2-56-1 digital voice announcer. The announcer receives calls directed to it through the ROLM CBX and delivers a recorded message to the caller. The system supports up to fifty-five simultaneous callers and supports remote access for updating recorded messages. At LaRC, messages are recorded and updated as needed by the NASA Public Affairs Office. There is a dedicated, NISN-provided toll-free telephone number for toll-free access to the emergency announcement system.

On-site system access for the maintenance and administration of the CBX and PhoneMail systems is facilitated with a MICOM Micro 600 single node port selector. The Micro 600 provides port contention arbitration and selection for terminal access to CBX and PhoneMail administration ports. The node is located in the main switch room and is extended to other switch rooms and remote locations via MICOM model M480 T1-multiplexers.

The LaTS telephone system also provides analog voice lines to a Tellabs, inc., conference bridge that is used and controlled by the Flight Simulation group.

Spare parts for frequently used and major system components are maintained in the NASA Building 1201 facilities.

Detailed Description
ROLM CBX
9751, Model 70, DC-powered
Software release 9004.4.38
13 nodes
ACD option
CDR list feature
1500 standard analog telephone ports
6800 digital RolmPhone ports
3 model 9755 attendant console ports
94 2-wire loop start DID trunks to Verizon
114 2-wire ground start CO (DOD) trunks to Verizon
72T1D3 ports in 3 T1 spans to FTS

ROLM PhoneMail
Software release 4.2.2.1
6 nodes
2 330MB hard disk drives per node
16 voice channels per node
4360 subscribers

Tellabs Conference Bridge

12	2804M1 line circuit
144	2802 compression amplifier
132	2801 access trunk
11	9194 conference amplifier
11	2806 security tone supply
11	9131 universal timer
12	8035 DC power supply

The hardware associated with LaTS services is housed in three switch rooms. Specific equipment located in each switch room is listed below:

Building 1201 Main Switch Room

8 CBX nodes
4 PhoneMail nodes
1 Interalia MLU2-56-1 digital voice announcer (Emergency Announcement System)
2 Interalia MMU2 digital voice announcers (system and ACD recordings)
10 Dual channel Racal Vadic 3264 modems
23 Telebit Trailblazer modems
MICOM Micro 600 port selector
Tellabs conference bridge

Building 1211 Switch Room

4 CBX nodes
2 PhoneMail nodes

Building 641 Switch Room

1 CBX node

Systems and Support

Configuration and management of the LaTS is performed entirely by the Outsourced Desktop Initiative for NASA (ODIN) contract. ODIN operates an off-site help desk 24 hours a day, 7 days a week, and ODIN personnel also provide on-site technical support from 6am to 6pm on business days. The ODIN contract specifies 4-hour return-to-service for infrastructure components, and ODIN maintains a spares inventory of frequently used and major system components.

10.6.4 Facilities

Wiring space is maintained for housing the telephone infrastructure devices. Building 1201,1211, and 641 are facilities that house the various components and nodes of the Rolm switch. Telephone system maintenance personnel are provided workspace in Building 1201.The major wiring facilities/switch rooms, in the aforementioned buildings, are maintained with the proper environment and back-up power.

10.6.5 Technology Flashpoints

Aside from a significant natural disaster, the two concerns for management are the aging technology of the existing switch and the physical security of Building 1201. The current switch has been very reliable but it is 14 years old. Consequently, there has been funding proposed for FY06 and the next two fiscal years beyond to invest in a new technology telephony system. Regarding the second concern, Building 1201 is located very close to a major thoroughfare that borders the Center property. There is a proposal for FY04 that would significantly alleviate the

physical security concerns with Building 1201. This proposal, if funded, would establish a redundancy of Building 1201's functionality in a building well within the interior of the Center.

10.6.6 Compliance

The current telephony system is compliant with NASA security policies. The telephony software is maintained at the highest level possible for the existing hardware platform.

10.6.7 To Be Condition

No firm plans prior to FY06 to replace the existing telephony system.

10.6.8 References

-IBM 9751 CBX System Service Manual #GU30-3030-01
-ROLM PhoneMail Maintenance Information Manual #GU30-0127-02
-http://www.Siemens.com
-Interalia MMU-2 and XMU operating guides
-http://www.Interalia.com
-http://www.gordonkapes.com
- http://www.tellabs.com

10.7 Video Component

The Langley managed video network (LaRCViN) is a broadband and baseband video distribution system that utilizes commercial off-the–shelf hardware to provide research, educational and other information to Langley employees.

10.7.1 As is Condition

The broadband video system, referred locally as LaRC TV, utilizes a combination of media that includes coaxial and fiber optic cable to provide 14 TV channels to 405 locations in 120 facilities. The headend, located in building 1201, contains all necessary electronic equipment to receive, record and transmit analog NTSC video signals and serves as the focal point for LaRCViN.

The baseband video system utilizes fiber optic cable and associated hardware for point-to-point video transmission for 10 facilities. The headend in building 1201 is the central terminal point for the baseband system.

10.7.2 Systems description and Operational Concept

The core of LaRCViN is the headend. Video signals are received by the primary multi-beam satellite antenna and 3 backup single beam antennas located at building 1201. The signals are processed by satellite receivers and routed to modulators and fiber optic transmitters for Center-wide or point-to-point distribution, or are recorded on VTR's for later playback and archival purposes. Videotapes can be recorded in VHS, S-VHS, and Beta SP formats. Live or taped locally produced video programs originating from a building connected by baseband video can be broadcast directly on LaRC TV or on NASA TV by satellite uplink. Test equipment is used to monitor and adjust video and audio signals. PC's are used to program the router/switcher, automatically start and stop VTR's, and to generate graphics and titles for program information on individual channels. News broadcasts from the 3 major network affiliated local TV stations are received by antenna and recorded daily for use by the Langley Public Affairs Office.

The headend houses an Emergency Broadcast System (EBS) that can be activated remotely by the Langley Office of Safety and Facility Assurance (OSFA). The EBS permits an emergency message to be broadcast on any or all LaRC TV channels simultaneously. The PC that controls the EBS is connected by modem and can be controlled from identical PC's located in the OSFA office building and the Langley Fire Station.

A separate broadband video system is operated and maintained by Langley to provide commercial service from the local CATV provider, Cox Communications. Langley is responsible for the portion of the system from the point of presence at building 1201 to 42 locations in 11 facilities, including the Langley fire station.

The baseband video system utilizes the LaRCNET fiber optic cable system for point-to-point video signal transmission. Ten facilities are connected to the baseband system. The baseband video system is

also connected to the LaRC TV satellite uplink facility and a two-way microwave link to the local PBS TV station in Norfolk. All signals are switched or routed from the LaRC TV headend.

10.7.3 Production Network Diagrams

Figure 57, Langley Video Network Headend diagram.

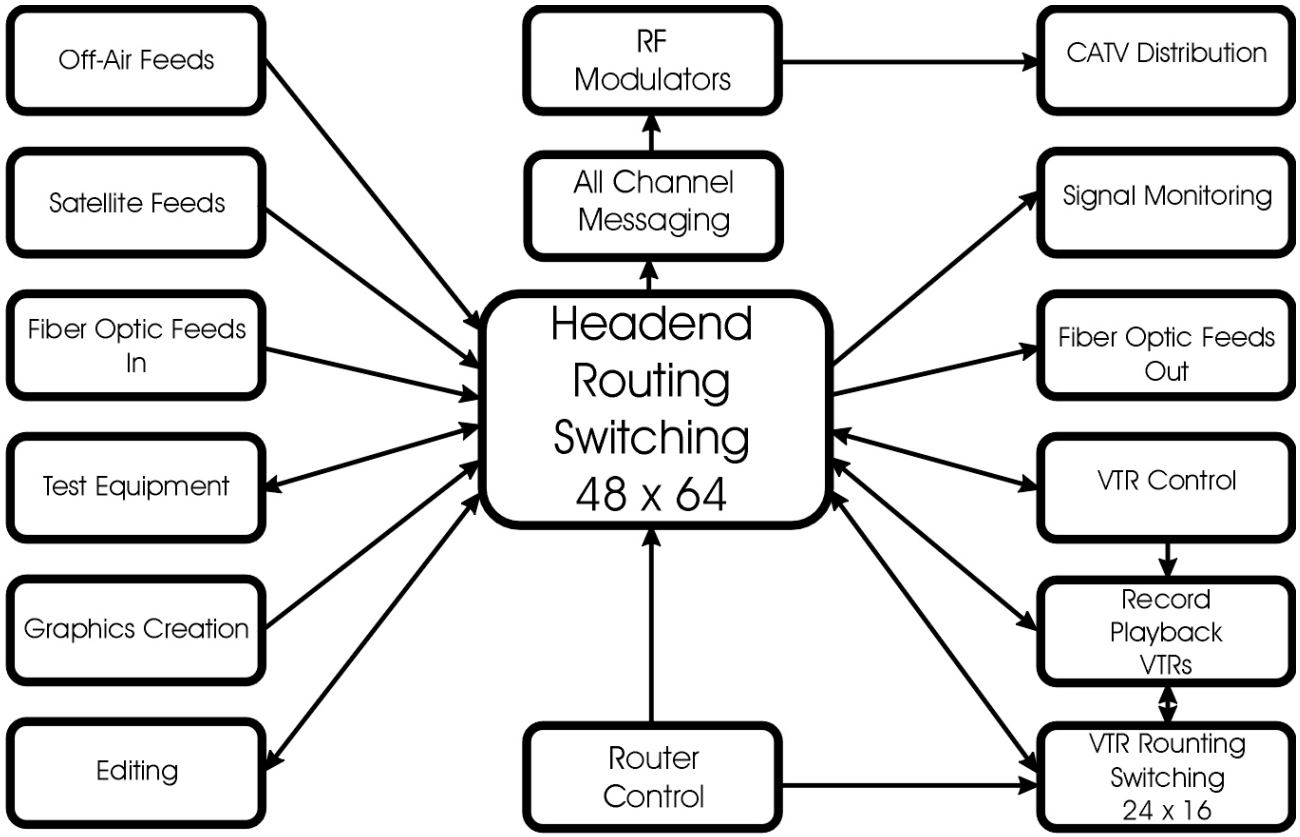

Headend Block

Figure 58, Langley Video Network Distribution Amplifier diagram.

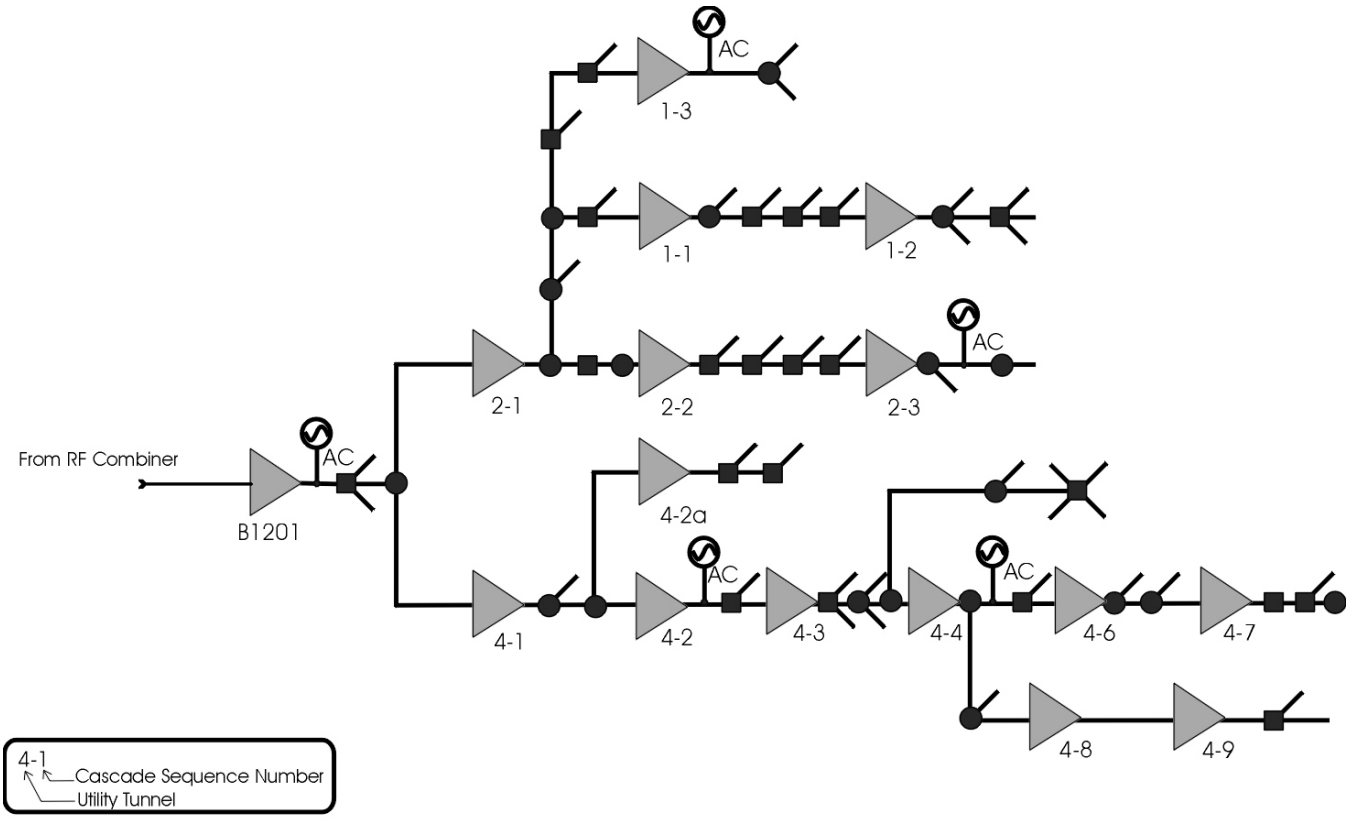

CATV Distribution

Figure 59, Emergency Broadcast System diagram.

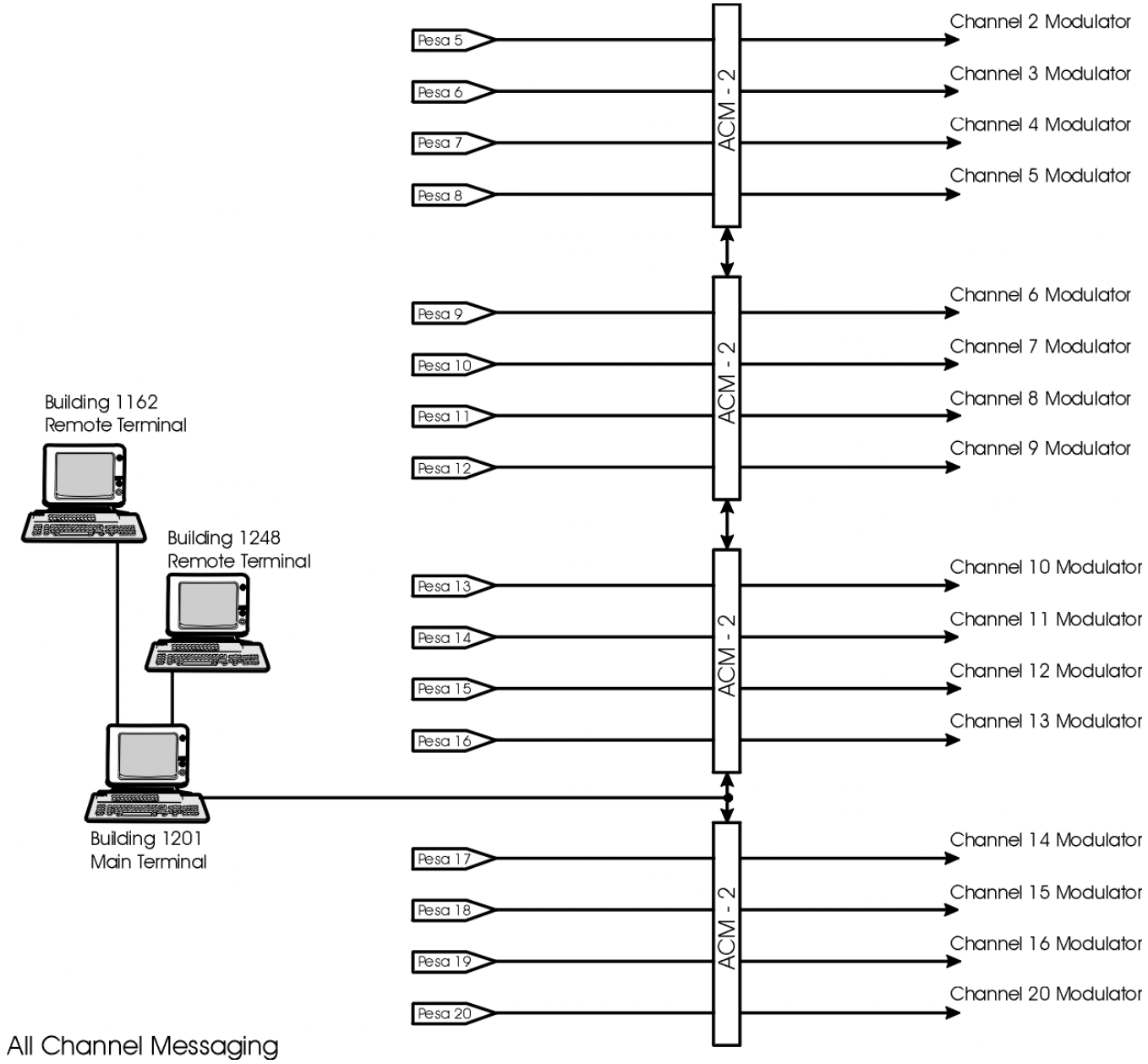

10.7.4 Systems and Support

The Outsourcing Desktop Initiative for NASA (ODIN) contract performs configuration and management of the LaRCViN system. ODIN operates an on-site help desk that is manned from 6 a.m. to 6 p.m. during business days. It operates an off-site help desk 24 hours a day, 7 days a week. The contractor is required to restore to service by close of the next business day.

10.7.5 Facilities

The LaRCViN headend is maintained for proper environment and uninterruptible power. Workspace is also provided to ODIN technicians who maintain the system.

10.7.6 Technology Flashpoints

RF filters that block LaRC TV channels 2 through 6 to prevent users from viewing content on these channels are located at various locations and are sometimes removed by unauthorized persons. An effort is being made to locate the filters in inaccessible locations.

The coaxial cable system within buildings is subject to being tampered with by users who connect unauthorized TVs to the LaRC TV system. Unauthorized connections often cause interference and a drop in signal levels to other TVs on the system.

10.7.7 Compliance

The LaRC TV system complies with the FCC rules and regulations for signal measurements and maximum allowable signal leakage. The LaRCViN system supports open standards and off the shelf products.

10.7.8 Capabilities

The LaRCViN system supports many capabilities including:
-Broadcast of authorized video programming on designated LaRC TV channels
-Satellite downlink of video programming for recording and/or distribution
-Satellite uplink of video content for NASA TV
-Point-to-point baseband video distribution

10.7.9 To Be Condition

The LaRCViN system will be upgraded to digital television capability as commercial off-the-shelf equipment becomes available while maintaining the current analog system capability. The NASA Digital TV Working Group recommends that NASA closely monitor and examine industry strategies aimed at providing CATV and video to the desktop services. Digital CATV and video to the desktop streaming solutions have yet to yield to clear industry standards. Therefore, an exact timeframe for implementation has not been established.

10.7.10 References

FCC 47CFR, Part 76 Multichannel Video and Cable Television Service

10.8 Electronic Work Environment Segment

10.8.1 Messaging and Collaboration Component

LaRC Electronic Mail System Architecture

The Electronic Post Office (Email system) utilizes off-the-shelf products to provide standards based email services to 5000 employees, both civil servant and non-civil servants.

10.8.2 As is Condition

The system is a combination of a single front-end email system to provide high security, address rewriting and message validity checking. A high-speed rear end system provides email access to users with protocols such as POP, IMAP and access via the web. The front-end system provides virus checking, spam control, and the central SMTP services. The user community uses POP or IMAP clients (predominantly Eudora) to transfer mail to their desktops and webmail to access their mail on the server.

10.8.3 Systems description and Operational Concept

The Email System is centered on Syntegra's IntraStore Server and eMail Sentinel. IntraStore Server is an information server ported on a Sun Microsystems UNIX platform. Unlike other servers, it is not limited to providing one type of service, such as web or e-mail server. The IntraStore Server supports multiprotocol access to combine web, messaging, and directory services. This makes the IntraStore Server information centric opening up a far broader range of communication. The IntraStore Server directory is fully compatible with the current Mail*Hub/93 Directory installed at NASA/LARC to provide directory services that go hand in hand with the email services. eMail Sentinel is a high-volume messaging gatekeeper that provides centralized enterprise wide protection against virus and spam attacks from the Internet.

10.8.4 Production Network Diagram

The overall architecture for the NASA Langley eMail Sentinel architecture is as shown below. This consists of the following primary components:

- A DNS server administered by NASA Langley situated inside the firewall (External to the Email system)

- Internet routing through the firewall routes to the eMail Sentinel system
- The Email Sentinel server routes to an IntraStore Server
- The ISS machine utilizes a RAID sub-system for data and message storage
- The ISS may route to other UNIX systems according to forwarding information configured by the user
- User systems may retrieve mail from the ISS using POP, IMAP or WebMail.

Figure 60

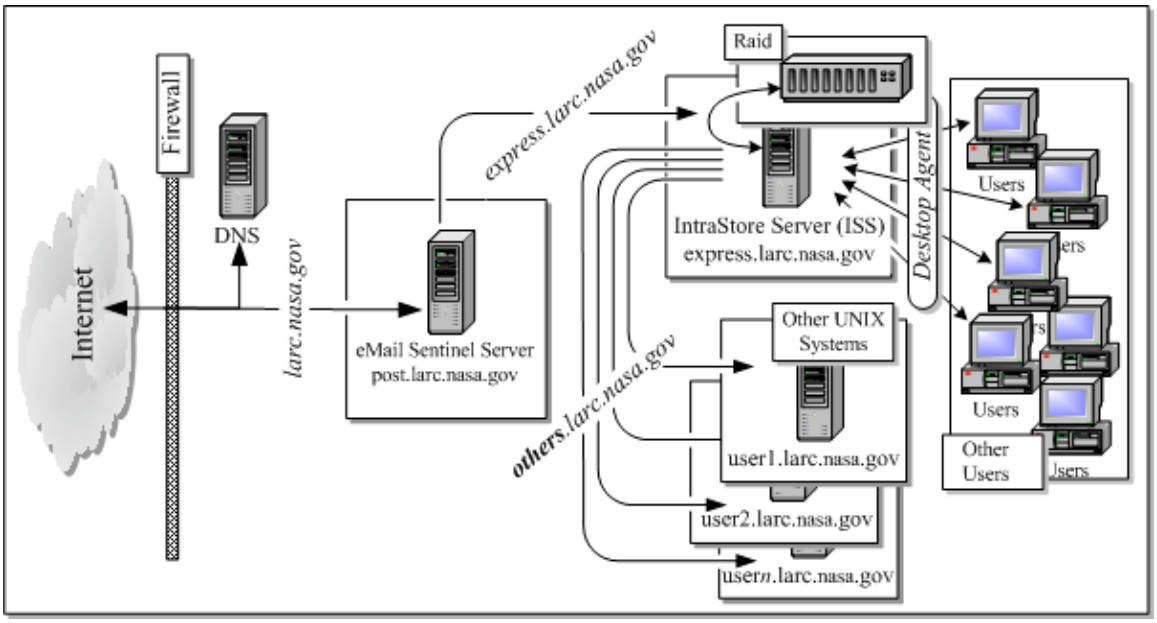

10.8.5 Systems and Support

The Outsourced Desktop Initiative for NASA (ODIN) contract performs configuration and management of the Email system. ODIN operates an on-site help desk that is manned from 6 a.m. to 6 p.m. during business days. It operates an off-site help desk 24 hours a day, 7 days a week. For the message store, there is disk mirroring with a hot standby to ensure minimal loss of data in case of failure.

10.8.6 Facilities

The Email system is located in server rooms properly equipped with back-up power and appropriate HVAC. Workspace is also provided to civil servants and contractors who maintain and administer the systems.

10.8.7 Technology Flashpoints

None.

10.8.8 Compliance

The Email system complies with NASA security policies such as LAPD 2810. It also complies with NASA standard 2815, NASA electronic Message Architecture, Standards and Products.

10.8.9 Capabilities

The Email System supports many capabilities including
-SMTP
-POP
-IMAP
-Fuzzy lookup
-ph server
-finger server
-whose server
-Web access to directory
-Alias Lists – static, automated, and dynamic
-Webmail access
-Changes to user account using a web interface.
-Auto forward
-Support password changes from within POP client
-Single message size limit of 32 megabytes
-Remote access
-Import personnel data
-Backup/Restore individual mailbox
-Backup/Restore programming and system logs
-Password grooming
-Protocol used for backup compatibility
-Automated load balancing
-Ability to block spam
-Ensured delivery, troubleshooting logging
-System monitoring

10.8.10 To Be Condition

No plans.

11 Marshall Space Flight Center (MSFC)

11.1 Computing Services Segment

11.1.1 Desktop Hardware and Software Component

Desktop services (including network services which are bundled with the desktop) described by the ODIN Service Model are composed of a set of IT characteristics (e.g., hardware and software acquisition, installation, maintenance, refreshment, administration, network access, customer support, relocation, training). These desktop services are bundled according to NASA's functional and performance requirements into one of several "service categories." This bundling includes any servers (e.g., email, print, file, and similar end user and domain based application servers) and/or "back office" products and services required to deliver the functionality to the desktop seats as well as an Integrated Customer Support/Help Service Level to support ODIN services.

11.1.2 As is Condition

ODIN provides desktop systems, including the necessary OS, software, and hardware for office automation. As part of the contract defined service levels associated with each systems entitlement, ODIN provides system refreshes, maintenance, OS and software upgrades, software support, server file space, moves, system administration, peripheral services, and Help Desk support.

Services provided on ODIN systems include the necessary OS, software, and hardware for office automation.
Supported hardware platforms are PC, Macintosh, and UNIX.

Current list of supported security features and applications in the standard load are in the tables below.

TABLE 27

PC APPLICATION	Version	VENDOR
Acrobat Reader	5.05	Adobe
Informed Forms		Shana
Micrografx Flowchart Reader		Micrografx
MS Office XP, SR2	Professional	Microsoft
Netscape	4.78	Netscape
Norton Antivirus		Symantec
OEMLOGO.bmp	Same	

Quicktime		
QVT Term	**None**	**QPC**
Registry Modifications	**Unique**	
Security Patches	**Unique**	
SNMP	**None**	**Microsoft**
Timbuktu Pro		**Netopia**
WinZip	**8**	**Winzip**
WS FTP	**6.6**	**Ipswitch**
OS	**Windows 2000, SP3**	**Microsoft**
Macintosh APPLICATION	**Version**	**VENDOR**
MacOS	**10.2.4/9.2.2**	**Apple**
Word X	**10.1.1 (2425)**	**Microsoft**
Excel X	**10.1.0 (2015)**	**Microsoft**
PowerPoint X	**10.1.0 (2013)**	**Microsoft**
Internet Explorer	**5.2.2**	**Microsoft**
Communicator	**7.01**	**Netscape**
Outlook 2001	**9.0 (1808)**	**Microsoft**
Eudora	**5.2**	**Qualcomm**
MS Entourage X		**Microsoft**
Acrobat Reader	**5.1**	**Adobe**
Stuffit Expander	**6.5.1**	**Aladdin**
Norton AntiVirus	**8.0.4**	**Symantec**
Timbuktu Pro	**6.0.3**	**Netopia**
netOctopus	**4.1.1**	**Netopia**
MacOS	**built in to OS**	**Apple**
MacTelnet	**3.0a29**	**K.Grant**
tn3270 X	**3.0b3**	**Brown Univ.**
Rbrowser Lite	**3.0.5.1**	**R.Vasvari**
MacX		**Apple**
Shana Eforms	**4.0.2**	**Shana**
Citrix Client		**Citrix**

11.1.3 Systems Description and Operational Concept

Each quarter, through the ODIN Attachment R process, the hardware for the new desktop systems to be delivered during that quarter is performance tested by Alterion Corporation and submitted to NASA, and approved by NASA. ODIN provides a standard load on all new system it delivers.

In addition to the standard load, ODIN supports a common desktop interface, Integrated Desktop Services (IDS), that contains additional applications and utilities the end user can install or run. This common interface provides an easy method for the end user to find and use the supported applications. Each of the applications has been tested in the MSFC environment and configured to install with a minimum of user interaction. This common interface combined with the

Standard Load makes supporting and upgrading these applications much easier in that support personnel know the default application configurations.

ODIN provides network infrastructure printing services as described in the ODIN contract. In addition, the customer can order additional ODIN print services through either a PRN seat or a LAN C seat. PRN seats are for printers that are purchased through ODIN, added to the network, and managed and maintained by ODIN. LAN C seats are for customer owned networked printers where ODIN maintains the print queues.

11.1.4 Systems and Support

The general metric for support calls related to problems with an ODIN supplied desktop system at MSFC is 4 hours Return to Service (RTS). This return to service metric varies by system specific seat service level entitlements as described in the ODIN contract. Some users have 2 hour contiguous RTS entitlements. Default support hours for deskside support on desktop systems is 6am to 6pm on workdays. MSFC ODIN users have 24/7 Help Desk support.
In order to receive support, the customer calls the ODIN Help Desk. If the Help Desk can not resolve the call, the ticket associated with the call is dispatched to the appropriate ODIN support group. Return to Service metrics are part of the ODIN contract Service Level Agreement metrics. Some of the major functions that the Help Desk provides include: reset user domain passwords; assistance with account issues; monitor MSFC's network and server status through HP Open View maps; add machines to the domain; issue IP addresses and update NetID; provide desktop back-up support; clear network printer queues; and provide user support through trouble shooting, education, and where appropriate establishing a remote control session to the callers system.

11.1.5 Compliance

ODIN works with the MSFC customer to provide upgrades based on contract and customer requirements. ODIN follows 2804 and 2805 requirements within the MSFC Change Board and implementation framework.

11.1.6 To Be Condition

In compliance with 2804 and 2805, ODIN is currently upgrading all Macintosh systems to OS X, and will be upgrading Windows systems to Office and Windows XP.

11.1.7 Application Services Component

For the purposes of this TF, Applications consist of all end-user/client-side elements commonly referred to as "the desktop". The four primary elements of the Applications component of the NASA Integrated IT Architecture are:

1. Basic Client Component (e.g., the desktop hardware, network interface, system software and security authentication mechanism)
2. Digital Object Creation Applications (e.g., office automation suite and other applications)
3. Collaborative Applications (e.g., email client, browser, conference application)
4. Object Analysis Applications (e.g., mathematical and graphical modeling)

(Note: It should be noted in this TF that NASA is well into the process of "outsourcing" the management, and, significantly, the ownership of these components within the Outsourced Desktop Initiative for NASA (ODIN). It should also be noted, however, that NASA has explicitly chosen to retain responsibility and control over the definition of the "architecture". The ability to define standards and modular IT component relationships within these kinds of frameworks are considered by the government to be essential. In that vein, it should also be noted that NASA has every intention to partner with the outsourcer service providers in order to ensure a value added product for the NASA end-users while providing the outsourcing entity the opportunity to manage their task in a cost effective manner.)

Each of the following sections defining the primary elements include an element description, relevant industry and NASA standards and future direction.

11.1.8 Basic Client Components

Each client or end-user requires two basic tools to operate, and interoperate, within the NASA IT Architecture. The first is a hardware device (desktop/end-user hardware) and associated operating system with the capability of accessing the Architecture Services and Infrastructure. A goal of the architecture is to provide access to any suitable class of devices including, but not limited to, desktop central processing units (CPU's), laptop CPU's, personal digital assistants, and devices providing Internet access. The devices may connect via cable, modem or wireless protocols. Other components in this category include those hardware and software mechanisms that enable access to the Architecture Network Service.

The second tool is a digital signature certificate containing a private key (see Security discussion) issued by the Agency Certificate Authority which authenticates the user to the Network Service and other systems and resources. Use of the certificate requires a file or message and a password. The combination of the appropriate device, operating system and certificate ensures a flexible means of access which can take advantage of new device technologies, while maintaining system security.

Relevant Industry and NASA Standards. Client devices are subject to *Minimum Hardware Configurations* (NASA-STD-2805). This NASA Technical Standard describes the minimum

hardware requirements for interoperability as well as minimum acquisition requirements to help ensure future interoperability. Personal Computer (PC) and Macintosh configurations are explicitly stated. UNIX hardware, software, and operating system configuration standards are defined in a separate set of documents.

Future Direction. NASA will continue to evolve basic client component options, including the anticipated trend towards network computers. Interoperability between heterogeneous environments of PC, Macintosh, and UNIX systems will be ensured for a wide but bounded list of configurations.

11.1.9 Digital Object Creation Applications

Object Creators are end-user tools used to create, visualize, store, organize and protect digital objects (information). These are commonly referred to as desktop applications. The application functionality is often an integration of the desktop application and other services discussed in this architecture. The created digital objects may be of any type or format depending on the tool and may be exchanged with other users. The exchange of these objects is the end user's primary means of interacting with systems.

Object creators fall into common application categories including, but not limited to, word processing, spreadsheet, presentation, web content tools, graphics, engineering, CAD/CAM, electronic forms, database records, and program code development.

Relevant Industry and NASA Standards. Common object creators are subject to *Minimum Office Automation Software Suite Interface Standards and Product Standards* (NASA-STD-2805). File interface standards and product standards and recommendations for PC's and Macintosh systems are provided in this NASA Technical Standard. Utilities for interoperating within the Internet environment are recommended.

Future Direction. NASA will continue to evolve common object creator applications, including requisite hardware and software requirements. Interoperability between heterogeneous environments of PC, Mac, and UNIX systems will be ensured. Solutions which preserve the native "look and feel" of the specific operating environment while providing cross-platform interoperability are most highly desirable.

11.1.10 Collaborative Applications

To collaborate is to labor together, work jointly, or to share in literary, scientific or intellectual production. In order to collaborate in a digital environment, end-users utilize digital objects (documents, drawings, text messages) databases, to share ideas, facts, logistical information, schedules, etc. Collaborative applications are end-user tools that enable the exchange and sharing of these digital objects. The primary difference from static objects being that collaboration is used to approximate face-to-face environments. Collaborative application

categories include but are not limited to, electronic mail clients, calendaring, video and audio conferencing, chat sessions, screen sharing, “white boarding”, web browsing, and file sharing.

Relevant Industry and NASA Standards. Collaborative applications are also set forth in *Minimum Office Automation Software Suite Interface Standards and Product Standards* (NASA-STD-2804) to the extent that these common applications are used in a collaborative environment. NASA standards are available for *Intelligent Electronic Forms* (NASA-STD-2809). Collaborative applications are also subject to requirements set for in *Network Protocol Standard* (NASA-STD-2806*), NASA X.500 Directory Standard* (NASA-STD-2807), and *Interoperability Profile For NASA E-mail Clients* (NASA-STD-2808). Video content "creation" and "communication" will include reception, conversion, and distribution of Digital Television (DTV) broadcasts conforming to ATSC standards for presentation on the Center(s). Requirements for "creation", and "communication of "Contribution Quality" video from production sources such as Imaging Technology and NASA-Headquarters utilizing D1 and other high bandwidth/no-low compression signal formats like CCIR-601 video not compatible with packetized infrastructures or highly compressed standards like MPEG do and will exist on the Center and probably will not be compatible with the packet based infrastructures or Asynchronous Transfer Mode (ATM) for true "contribution quality" activities.

Future Direction. Collaborative applications are expected to grow as NASA’s IT Infrastructure is designed to meet the demands of these tools. The existing analog CATV Plant and headend utilized for video/audio "distribution" has begun migrating toward an MPEG-2 and ATSC based standard integrated into the information network infrastructure but only once suitable Quality of Service issues with latency (delay), guaranteed bandwidth, multi casting, and packet loss can be addressed and supported in the network infrastructure (ATM is close) as well as when DTV/HDTV "converters" can be made available for a reasonable cost to retrofit the existing large number of NTSC tuners and video monitors throughout the Center and Agency that will be made obsolete by 2006 due to the national DTV/HDTV conversion. Collaboration tools and servers such as required to support desktop collaboration tools like CU-See-Me and distribution tools such as RealAudio/Video and IP/TV will be integrated into the information network infrastructure, coordinated, converted (as required), and switched out of the headend facility but only once suitable Quality of Service issues with latency (delay), guaranteed bandwidth, multi-casting, and packet loss can be addressed and supported in the network infrastructure.

11.1.11 Object Analysis Applications

Object Analysis applications provides manipulation, modeling and visualization of mathematical and/or graphical object data. Object analysis is typically associated with the processing of scientific data. Typical object analysis applications include basic mathematical analysis, structural analysis, thermal analysis, and simulation.

Relevant Industry and NASA Standards. No NASA standards exist in this area. *[Is there a CAD standard?]*

Future Direction. NASA's Scientific and Engineering community requires the flexibility to identify object analysis applications which best meet the demands of their research, and as such, standards in this area must not interfere with the primary mission of the researchers. As with all other areas, the level of investment, degree of required interoperability and required integration with other mission functions must be considered.

Applications and Web Services

Software Application Development and Maintenance Support is provided to meet Center and specific customer requirements and includes definition and specification, requirements analysis and feasibility studies, design and development, testing and integration, installation and deployment, configuration management, user assistance and training, documentation, ongoing maintenance (repairs and upgrades), other operational support, and replacement or retirement. COTS application support includes evaluation, procurement, installation, integration, testing, training, user assistance, administration, and other operational support of non-ODIN COTS software.

Web services also include internet consulting, Searching, indexing, and marketing, web graphics design, web site development, and web site hosting and maintenance.

11.1.12 As is Condition

Customer requirements are being met by the Office of the CIO and it's prime IT contractor. Customer feedback in the form contractor evaluations continues to be excellent. Technologies range from legacy applications to modern web-based applications, with legacy systems being phased out as funding permits. The environment includes a wide range of programming languages, operating systems, databases, and machines. Support personnel exhibit a wide variety of expertise required to support all systems.

11.1.13 Systems Description and Operational Concept

A. The Office of the CIO is responsible for:
A.1 Providing and managing the Applications and Web Support Services itemized in the following table:

TABLE 28

SERVICE	CENTER INFRASTRUCTURE	BASIC	AUGMENTED
Application development and maintenance	Core applications that support the Center infrastructure functions, such as, administrative computing, Help Desk, security, and property	Applications that support basic functions, such as, desktop computing and facility service calls	Applications for specific customers or groups of customers (e.g., scientific and engineering applications; administrative applications specific to a

	management		Directorate or organization; etc.)
COTS applications support	Core applications that support the Center infrastructure functions, such as administrative computing, help desk, security, and property management	Applications that support basic functions, such as desktop computing and facility service calls	COTS applications for specific customers or groups of customers (e.g., scientific and engineering applications; administrative applications specific to a Directorate or organization; etc.)
Production support	Data preparation; data entry; initiation and monitoring of production programs; and generation, review and distribution of reports for Center infrastructure applications		Data preparation; data entry; initiation and monitoring of production programs; and generation, review, and distribution of reports for specific customers
Application training	General training for Center infrastructure applications	ODIN differences training	Specialized training for specific customers' applications

A.2 Adhering to all applicable government, Agency, and Center policies and regulations regarding software development and maintenance.

B Directors/Managers of MSFC Organizations and Data Owners (customers) are responsible for:

B.1 Participating in the application life cycle process for the purposes of:

a. Providing user requirements,
b. Performing independent testing (as required),
c. Serving on the Configuration Control Board for the application, which includes concurring in application requirements and releases,
d. Reporting any discrepancies, and
e. Approving user access to the application.

B.2 Ensuring that adequate funding is available for their organization's Basic and Augmented services.

11.1.14 Systems and Support

Application Support Approximately seven civil service FTE's in the Office of the CIO are required to support applications. These personnel are mathematicians, engineers, computer scientists, IT Specialists, and MIS specialists and are experts for their respective customer areas and ensure that their customers' requirements are implemented in computer software applications. They provide oversight on requirements, budget, standards, policy, regulations, and provide contractor evaluation inputs for the contractors' award fee. They monitor approximately 150 contractor WYE's who provide the applications and web services for MSFC customers. Contractor personnel are experts in the areas of system/application requirements definition and design, programming languages, databases, operating systems, configuration

management, and specialized fields, such as atmospheric science and electromagnetic compatibility.

Help Desk Support All applications and web services are supported through the standard MSFC Help Desk. Help desk personnel dispatch open trouble tickets to the responsible service owner for resolution and closure.

Computing Environment Numerous computing environments are used at the MSFC in support of MSFC applications and web services. These are documented in detail (by each application and web page) in the paragraph entitled "*Systems Description and Operational Concept,"* part (1) above. Computing platforms and any required software are provided by the Office of the CIO or the customer.

Local Area Network Applications and web services use the standard MSFC network.

11.1.15 Facilities

All support personnel and computer systems are housed in various buildings at the MSFC. As stated earlier, standard MSFC services of ODIN desktops, LAN, and the MSFC Help Desk are used to deliver the service.

11.1.16 Technology Flashpoints

None.

11.1.17 Compliance

A few legacy applications are not 508-compliant, but these have been recorded in the CIO registry with a disposition plan. All other NASA and Federal regulations and standards, such as those documented the Marshall Management System are adhered to. IT security plans have been developed for required major systems. Additionally, MSFC's mission contractor has a web standards board with a documented checklist against which all new web sites are validated before they are placed into operation.

11.1.18 To Be Condition

Application and Web Services can be improved by

- Replacing legacy applications with up-to-date technology and tools,
- Making more applications web-accessible,
- Implementing IT security requirements at the highest level (more than minimum) for applications and web services, and
- Improving the Center's data architecture.

NACC

The NACC provides Enterprise Server based Administrative information processing services for all nine NASA centers and Headquarters as well as Programmatic information processing services for the Johnson Space Center and the Michoud Assembly Facility. Additionally, the NACC provides Agency wide Data Center services for the Integrated Financial Management Program (IFMP), NCCS (formerly NISSU), Web Tads, SOLAR, NAIS, and Space Launch Initiative (SLI) Wind-chill projects.

The NACC vision arose from the notion that if NASA's IBM-compatible mainframe-based business processes could be standardized and consolidated into one Data Center, operational synergies and significant cost savings would ensue. Further, the NACC envisioned additional cost-effective standardization and consolidation by employing state-of-the-art techniques and technology innovations.

The Office of Management and Budgets (OMB) sited the NACC as the best example of mainframe consolidation in Government. A recent benchmark performed by the Gartner Group found that the NACC provides $1 of service for $0.75 as compared to all of industry. In addition, Gartner found that the NACC's Cost per Millions of Instructions Per Second (MIPS) exceeded that of its Federal peer group by 44 percent. The vision has been extended to the Data Center support for the very important NASA Agency wide systems and projects outlined in paragraph one above.
The NACC's Enterprise architecture continued the various centers' Strategic Capabilities, Business, Information, and Data Architectures, as they were when the original consolidation began, but mapped them to technically superior Communication, Systems, and Computer Architectures. The Enterprise Architecture allows for the evolution of the centers' business requirements as well as the introduction of new technologies.

Figure 61

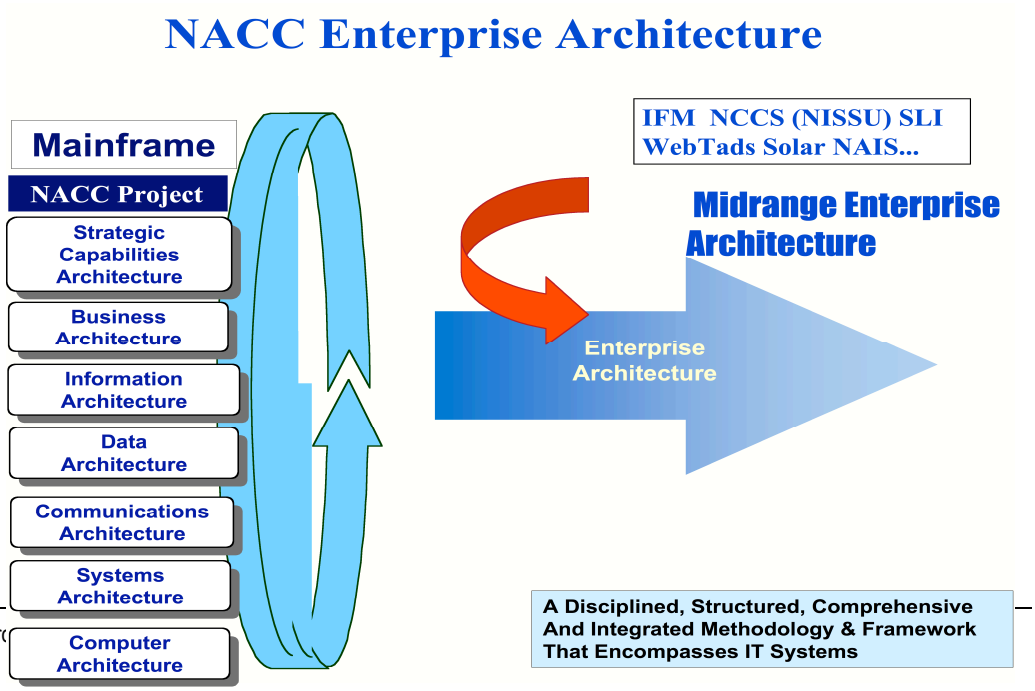

11.1.19 As is Condition

The NACC provides excellent information processing services to its customers and enjoys a high level of customer satisfaction. The NACC's operational procedures are ISO 9001 certified for both mainframe and midrange services. The Programmatic business processes are stable and are experiencing minimal growth. The Administrative business processes are will begin to diminish due to the phased implementation of NASA's Integrated Financial Integration Program (IFMP). Nevertheless, it is currently estimated that more than 30% of the Administrative and 100% of the Programmatic workloads will remain when IFMP is fully implemented. All NACC workloads currently run on three IBM Generation Five CMOS processors that will begin to approach an end of life expectancy in FY-04. Virtual tape and virtual Disk subsystems are also beginning to approach end of life support in the same time frame. Firm plans are in place for replacing this equipment to stay on state-of-the-art equipment before obsolescence is reached.

11.1.20 Systems description and Operational Concept

The operational concept employed by the NACC entails the collocation of each center's Operating System and business processes to IBM CMOS processors using Logical Partitioning (LPAR). Each Center's information processing workload occupies its own LPAR and is operated as if the Center had its own processor and peripherals. A single operations staff handles all mainframe LPARs, and all midrange operations support. All Centers share the same Configuration and Change Management, Disaster Recovery/Business Continuity, Help Desk, all Data Center Facilities, security, and other Data Center support such as Systems Support staff, communications, management, planning, and procurement.

11.1.21 Production Network Diagram

Figure 62

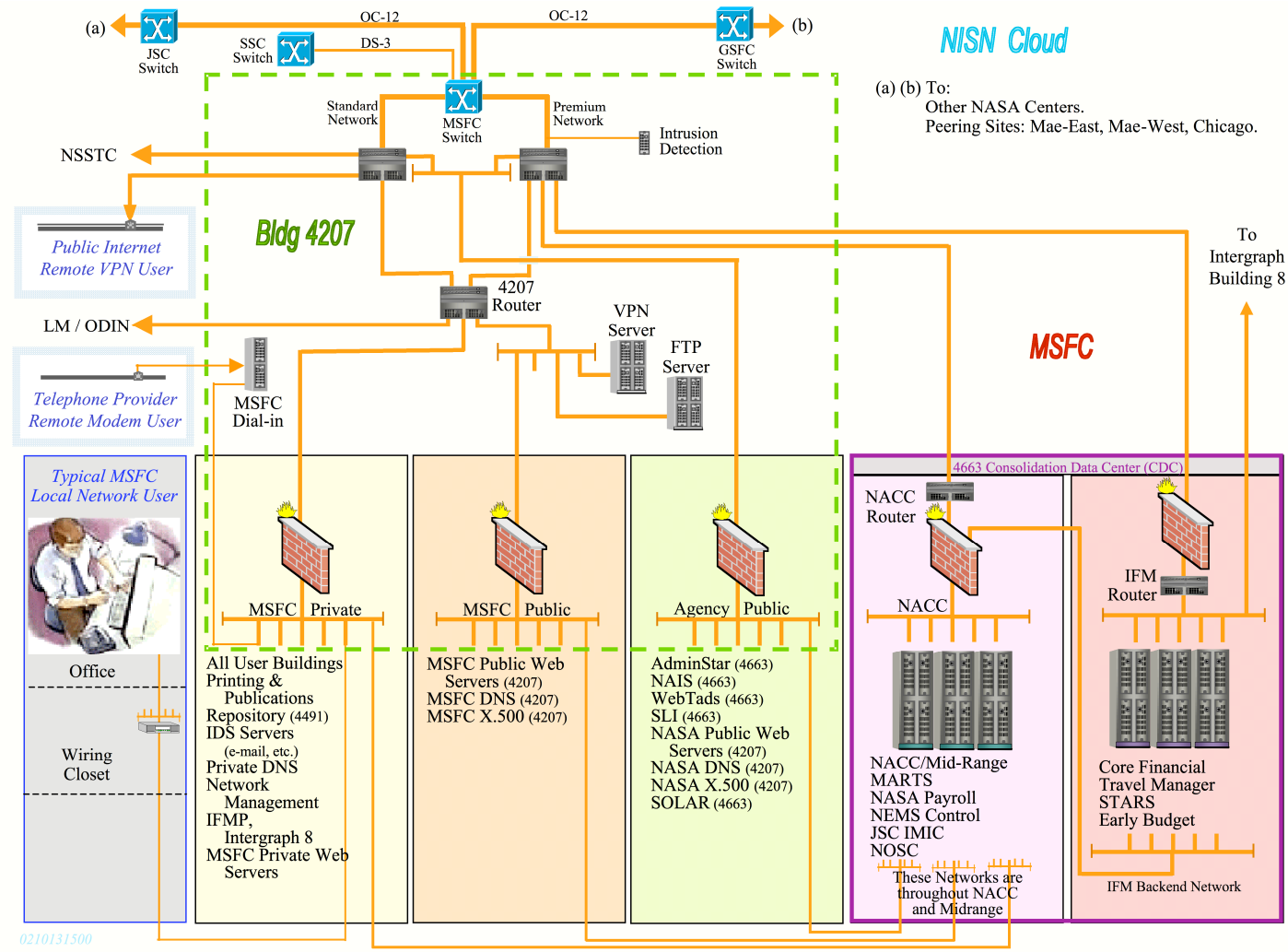

11.1.22 Systems and Support

The NACC computer architecture consists of three IBM 9672-RB6 mainframes and supporting peripheral devices including communications hardware, automatic tape libraries, virtual tape management and virtual disk management hardware. The mainframes are divided into logical partitions, at least one for each NASA Center supported. A staff of Operators, Systems Programmers, Security administrators, and Data Base Administrators provide the professional support for the various Center workloads.

11.1.23 Facilities

The NACC occupies a raised floor Data Center with highly reliable redundant-sourced, Motor Generator-backed, uninterruptible power and air conditioning.

11.1.24 Technology Flashpoints

The Enterprise Servers and their Virtual Tape and Virtual Disk are nearing end of life and will require a technology refresh by FY-04.

11.1.25 Compliance

The NACC complies with NASA and Federal regulations:

- NASA Policy Directive 7120.4A, Program and Project Management
- NASA Procedures and Guidelines (NPG) 7120.5A, NASA Program and Project Management Processes and Requirements.
- NASA Procedures and Guidelines (NPG) 2810, Security

11.1.26 Capabilities

The NACC provides computer systems and operational support for Programmatic and Administrative processing requirements for the Agency. Generally, the NACC is responsible for the following:
-Workload consolidation
-Operating systems maintenance and support
-Workload management required to achieve optimization of the operating environments by the consolidation of software, operating systems, and support
-Installation and maintenance of systems software
-Hardware and software maintenance, including data backups, capacity analysis and planning, system performance, and problem resolution
-Change control and configuration management
-Implementation of processes that decrease cost while providing equal or better service for Center workloads
-Obsolescent replacement, modernization, and technology alignment
-Standardization and automation
-Disaster recovery/Business Continuity
-Fair and equitable fee for service
-Security and risk assessment
-Web Server support

11.1.27 To Be Condition

In order to maintain a supported posture, the NACC will upgrade its Computer Architecture through a technology refresh of its IBM CMOS processors and its virtual tape and virtual disk systems. The refresh will allow the NACC to remain a State-of-the-art Data Center operating with current level Operating Systems and applications software.

11.1.28 Data Center Component

BUSINESS MIDRANGE SYSTEMS

The Office of the CIO supports a wide range of MSFC's administrative and business applications and also for the Agency. These applications currently execute on mid-range size computers such as IBM RS6000's, Compaq DL380's and others. The primary functions of the Midrange Group include providing hardware and systems software enhancements to meet CIO customers' performance requirements in response to changing workloads and technologies. The group also maintains operating systems, database management systems, compilers, libraries, and all other systems software necessary for the operation, execution and security of the computer and communications systems. Among the services provided include: system administration, backups of system and/or data, program and data security, print production and dissemination, scheduling, quality control, IT security, system monitoring, troubleshooting and other appropriate system-related activities as required by the customers.

ENGINEERING AND SCIENTIFIC MIDRANGE

The cornerstone of the computational support for the engineering and science customers at MSFC includes a Virtual Memory Compute System (VMCS), SGI 4D/480, a Virtual Memory File System (VMFS) SGI Origin 2000, and the EDALF1 (no current meaning to letters) HP DEC Alpha 4800. This system also includes 14 Terabytes of RAID disk. This system is primarily used for analysis including thermal, structural, computational fluid dynamics, and various scientific codes monitoring weather, analyzing crystal growth and many other functions. The primary tasks of the Midrange Group supporting the ECS are similar to that for the business applications, including providing hardware and systems software enhancements to meet CIO customers' performance requirements in response to changing workloads and technologies. The group also maintains the operating systems, compilers, libraries, and all other systems software necessary for the operation, execution and security of the computer and communications systems.

USER-OWNED MIDRANGE

The Office of the CIO also provides specific midrange services to customers across MSFC for other scientific and engineering requirements. The task load is very similar to that of the business applications except for the location of the systems. Many of these systems are located in customers' buildings here at MSFC, and some of them are located in a central computer room at MSFC. These applications currently execute on mid-range size computers such as Suns, Silicon Graphics, Compaqs, Dells, HPs and others. The primary functions of the Midrange Group include providing hardware and systems software enhancements to meet CIO customers' performance requirements in response to changing workloads and technologies. The group also maintains operating systems, database management systems, compilers, libraries, and all other systems software necessary for the operation, execution and security of the computer and communications systems. Among the services provided include: system administration (as much or as little as wanted by the customer), backups of system and/or data, program and data security, print production and dissemination, scheduling, quality control, IT security, system

monitoring, troubleshooting and other appropriate system-related activities as required by the customers.

11.1.29 As is Condition

The Midrange Systems at MSFC (Business, Engineering and Scientific and User-owned) includes more than 240 systems managed by a small group of around 12 –14 people. These people have an average of 19 to 20 systems each for which they are responsible. According to a survey done within the past year, our customers are 94% satisfied with our services. Many of these customers have legacy systems for which funding for updates is unattainable at this time.

11.1.30 Systems description and Operational Concept

There is no high-level system diagram. As mentioned above, there are over 240 systems managed by a small group of system administrators. Many systems are located in customers' work areas. Providing a "detailed description and operational concepts" document would be extremely time consuming. The best way to describe our operation is that the small group of people that manage these systems are cross-trained and back each other up. We have no single point of failure. Where possible, systems are kept at same or close to same system configurations, software revision levels, IT security levels, etc. The most important thing we do is to keep each system current in regard to IT Security with customer satisfaction a very close second.

11.1.31 Facilities

Many of the systems are located in the B-wing and C-wing computer rooms of Building 4663 at Marshall Space Flight Center. These computer rooms are key card controlled with Uninterrupted Power Sources (UPS) and controlled environment. All other systems are located in customer work areas, per their requirements. These areas vary and can be a controlled computer room environment or just a room.

11.1.32 Technology Flashpoints

A major "flashpoint" is the lack of funding available to keep institutional systems upgraded to current technology. The institutional budget for scientific and engineering computational resources has been slashed to the point of non-existence. We are now in "full cost accounting". This will eventually fail and hopefully we will go back to funding computer resources to meet requirements from the top, rather than pushing the money down and customers making the decisions to "own their own systems".

11.2 Communications Segment

11.2.1 Local Area Network Component

A network is a telecommunications system which provides the physical path by which various independent devices, and therefore end-users, to communicate with each other. This path is transparent to the data (information) being transmitted and thus may accept varying applications and data formats such as file transfers, graphics, and digital voice and video. Networks are generally divided into two classes, basically by geography: (a) Wide Area Networks (WAN), which interconnect facilities over a very large geographic region, including intercontinental; and (b) Local Area Networks (LAN), which interconnect users in a small geographic region such as within a building or over a concentrated campus environment. Typical components of networks are concentrators, bridges, routers, multiplexers, customer service units and wiring. Many underlying components are communications protocols such as TCP/IP and end-user name services.

a. Wide Area Network Initiatives.

MSFC uses the NASA Integrated Services Network (NISN) for WAN connectivity. NISN centrally provisions WAN services for the Agency. The scope of the NISN WAN can be defined as the demarcation point at each Center to the entry point into the Internet.

Relevant Industry and NASA Standards. Current NASA policy dictates the use of Internet Protocol (IP), RFC 791 as the standard protocol for data networking.

Future Direction. IP version 6 (IPv6) is a new version of the Internet Protocol, designed as the successor to IP version 4 (IPv4) [RFC-791]. Because of IPv4 addressing limitations, the Internet is running out of address space. One of the improvements in IPv6 is an increased address size from 32 bits to 128 bits. This will support more levels of addressing hierarchy, a much greater number of addressable nodes, and simpler auto-configuration of addresses. NASA does participate in IPv6 test beds.

b. Local Area Network Initiatives.

Across the NASA Centers, there has been no model of a common LAN implementation. NASA Centers started implementing local area networks since the mid-1980's. As these technologies have improved and budgets have allowed obsolete equipment to be replaced, NASA Centers have begun looking at common practices and implementations. MSFC started a complete LAN upgrade in December 2001. Adding more network redundancy and end-user bandwidth to 100 megabits per second, all buildings are scheduled to be cut-over in October 2004.

Relevant Industry and NASA Standards Current industry standards and MSFC direction is to use IPv4 as protocol of choice. Other protocols are supported as legacy only.

Future Direction As technology and bandwidth speeds increase, it is expected that bandwidth to the desktop will be at gigabit per second speeds. LAN backbone speeds will be at 10 gigabit per second speeds. As One NASA concept develops common LAN implementation and requirements will better augment collaboration and communication between the various NASA Centers.

11.2.2 As is Condition

The MSFC LAN is undergoing an upgrade. While the new network will be a three layer architecture; core, distribution, and access layers, some buildings still are on the Cat3 wiring using 10Mbps CSMA/CD. The new state is Cat5e wiring 100Mbps switched Ethernet for each user. These drops connect to an access layer switch. Each access layer switch dual connects to two different distribution layer switches for redundancy. Each distribution layer switch connects to two different core layer switches. The core layer operates at 1 gigabits per second.

11.2.3 Systems Description and Operational Concept

Operational Concept

The ODIN Network Management Center (NMC) is located on the MSFC campus in the central communications building and supports a variety of critical services on the NASA/MSFC Local Area Network infrastructure. The NMC is a group of highly skilled engineers and analyst that are primarily responsible for troubleshooting complex network and system related problems on the MSFC network. They monitor over 500 routers, core switches, distribution switches, access switches, Gigabit links, and wireless access points that comprise the centers data network. In addition, the NMC manages over 10,000 access layer switch ports and hubs that provide either 10BaseT or 100BaseT connectivity to networked devices including all users workstations. They also are responsible for allocating IP addresses and DNS domain name registration. They also perform configuration and change management, performance and policy monitoring, reporting and scheduling. The NMC provides a structured environment that effectively coordinates operational activities with all participants and vendors related to the function of the network. The NMC is fully equipped with sophisticated network management, monitoring and analysis tools.

Systems description (network systems that provide service to users)

Virtual Private Networks (VPN)
Remote Dial-in Access Server
Domain Name System (DNS)
IP Address Management (NETID)
Dynamic Host Configuration Protocol (DHCP)
Wireless Local Area Network (WLAN)
Access Control Server (ACS) Radius

Cisco VPN 3000 Concentrator combined with Remote Authentication Dial-in User Service

(RADIUS), NT Domain Authentication, and RSA SecurID for authentication and authorization provides remote users with secure access to MSFC enterprise services. The MSFC NMC is responsible for monitoring, administering and troubleshooting the VPN server and client access problems.

Cisco AS5300 Server provides remote users dial-in access to MSFC Enterprise services. This service supports 56 Kbps analog modem and ISDN connections. Remote Authentication Dial-in User Service (RADIUS) is used for authentication and authorization.

Nortel Optivity NETID is a central management platform that manages both static and dynamic IP addresses as well as DHCP servers. NETID supports database replication, ensuring that a backup copy of IP addressing information is always available. All MSFC users and device IP addresses are registered in the NETID database.

Wireless Local Area Network (WLAN) provides MSFC wireless users with secure access to enterprise services while mobile. Cisco AP1200 Access Points (AP) provides 802.11b coverage in MSFC buildings where wireless is implemented. Cisco LEAP is used as the authentication algorithm, providing both clients and access points with dynamic WEP keys, combined with 802.1x, an IEEE-standard authentication framework, as the authentication protocol. MSFC users with IDS (NT Domain Accounts) can gain access to internal enterprise resources, and guest users with wireless devices can associate to the WLAN and access the public internet.
Cisco Access Control Server (ACS) is used to enforce log in and privilege policies for VPN, Dial in, and Wireless users to access MSFC Enterprise services. Security audit information is captured and recorded in the ACS. Radius servers are located on separate server farms in different buildings to support a redundant topology for these services.
Network Support\Systems (systems that support network management)

HP OpenView (Network Management System)
NetScout RMON Performance Manager
Sniffer Distributed
Cisco Wireless LAN Solution Engine (WLSE)
CiscoWorks Campus Manager
Cisco QoS Policy Manager (QPM)
Network Analysis Module (NAM)
Terminal Access Controller Access Control System Plus (TACACS+)

HP Openview is used to probe and discover any new device and topology change on the MSFC LAN. Alerts are sent to the NMC to investigate any new devices that were discovered during a network probe. Additional all network devices up/down status are polled at regular intervals. SNMP queries and collection agents provide dynamic views to assist NMC engineers in troubleshooting analysis for Layer 2 and 3 network components.

NetScout RMON Performance Manager is used for proactive troubleshooting, capacity planning, and reports detailed performance information.

Sniffer Distributed is a fault and network performance management system used by the NMC for network monitoring, protocol decodes, and expert analysis on LAN segments experiencing problems. Remote sniffer agents are placed in the field at trouble spots to capture packets for complex problem analysis.

Cisco Wireless LAN Solution Engine (WLSE) is used to manage the MSFC campus WLAN. The WLSE will monitor fault and policy events, performance conditions, device reporting and security information, access point configuration file management, and firmware upgrades. Reporting capabilities for AP performance, utilization, and security policies are available.
CiscoWorks Campus Manager is used to mange Cisco network devices on the MSFC infrastructure. This system allows NMC engineers and analyst to better understand, monitor, configure, diagnose, and be proactive to network infrastructure changes. Automatic topology visibility allows the NMC to easily change, monitor and control the MSFC data network from a central console. User tracking assists NMC in locating end-station connections at the access switch in troubleshooting or connectivity analysis. VLAN management provides the logical display of VLAN configurations in each switch.
Cisco QoS Policy Manager (QPM) is used to manage and enable end-to-end quality of service on the MSFC LAN infrastructure. QPM delivers differentiated and integrated services across the infrastructure with converged voice, video, and data applications.
Network Analysis Module (NAM) is an interface card installed in the Core and Distribution Catalyst 6500 switches for remote monitoring of network traffic over the MSFC LAN. The NMC uses this system to troubleshoot and monitor network availability and health. Access to the RMON1, RMON2, SMON, DSMON, and voice monitoring are also features of the NAM traffic analyzer.

Terminal Access Controller Access Control System Plus (TACACS+) is a security application that provides centralized validation of MSFC Network administrators attempting to gain access to network devices. Auditing and regulating is controlled on a per-user or per-group basis.

11.2.4 Systems and Support

MSFC discussed the need for moving to an enhanced data network that would be capable of meetings Marshall's future IT needs. Those needs are partly driven by changing trends including: shifts from batch processing to distributed systems, enhanced desktop tools, and increased network capacity. Also, the need for a high availability network here at Marshall is accelerated by the emergence of multi-service or "converged" networks supporting data, voice, and video applications over a common IP-based packet infrastructure that will support E-Business as well as the ongoing mission critical applications. MSFC also designed a level of network redundancy with back-up power supplies. Additionally, the design incorporates the ability to "lose" a single communications closet without "losing" multiple closets in the same building, unless directly affected by a power outage.

Based on these requirements, a network solution was designed that will provide a multi-gigabit core network backbone with redundancy (based in three key buildings), backed up by uninterruptible power supplies. Additionally, the design will accommodate the use of voice-

over-IP telephony and streaming video technology as well as switched 10/100 Mbps to the user's desktop.

Other requirements satisfied by the design include:

- High network availability.
- Design of the network to easily accommodate additional redundancy and additional Voice Over IP phones upon future requests.
- The ability to enforce QoS (Quality of Service) policies as directed by MSFC/NASA in their overall IT strategy.
- Enhance the security of the overall MSFC infrastructure by eliminating all un-managed ports.
- Provide redundant DNS and X500 Server Services.
- Provide SANS solution for additional disk space and improved availability.

11.2.5 Voice Component

Telephones – Currently MSFC has InteCom S80+ telephone switch with approximately 12,000 active ports (i.e. analog and digital phones, fax machines, modems, etc.) MSFC is in the process of upgrading the switch to an EADS of North America PointSpan system. This system will be VoIP capable. The voice mail system that is attached to the switch is an Octel VMX 300 XL with approximately 7,000 active mailboxes.

Cell Phones – MSFC has two cell phone providers, Cingular and Corr Wireless. Cingular is the cell phone of choice for users that need cell service occasionally or require service mainly for travel. Corr Wireless can be used as a desktop replacement and is designed for users that are heavy users in the local area. Corr Wireless gives the users 5-digit dialing and FTS capabilities. Between the two providers, MSFC has approximately 800 users.

Pagers - MSFC utilizes both US Government owned paging services and Leased paging services. The US Government owned system consists of a central controller, a Radio Transmitter operating in the VHF region of the radio spectrum and approximately 600 pager units. There are five pager options (Standard Statewide Digital, Statewide Alpha, Nationwide Digital, Nationwide Standard 2-way, Nationwide Enhanced 2-way) available to users via MSFC's leased paging agreement with approximately 900 currently being leased.

Radios – MSFC has a Land Mobile Trunked Radio System. The system supports such activities as Maintenance Operations, Security, and Emergency Services. The Radio System provides Radio Communications in the 406 to 420 MHz portion of the radio frequency spectrum. MSFC has approximately 550 Portable radios, 25 Mobile Radios, and 15 Dispatch Radio units.

MSFC just completed an upgrade to its voice system in December 2003. EADS Telecomm PointSpan was installed. This system has a unique design that allows MSFC to integrate Voice over IP (VoIP) as a phased approach as issues of quality, security, and availability continue to be addressed and solved. MSFC changed its voice architecture to allow the system to operate as a

single, unified, and geographically dispersed platform. The new architecture will allow some voice communications to continue in the event of a failure or disaster at one of the hub locations.

Relevant Industry and NASA Standards Current industry standards include H.323. This standard defines audio, video, and data communications between IP network terminals These terminals could either be PC's or IP telephone units.

Session Initiation Protocol (SIP) is defined by RFC 2543. SIP can support Internet-based calls and conferences much like H.323. SIP has very little overhead and uses many of the mechanisms as HTTP.

Media Gateway Control Protocol (MGCP), RFC 2705, is a control protocol for converting audio signals into IP data.

Because it is unknown which signaling protocol will emerge as a winner in the marketplace, NASA has to buy gateways and other network devices that support both the H.323 protocol and the Session Initiation Protocol, or SIP.

Future Direction Since these standards are somewhat similar in functionality, the VoIP industry has to settle on a suitable IP telephony signaling protocol to handle the major features of call management, conference calling, and call transfers. Emerging Telecommunications Industry Association (TIA) standards will also define IP telephony and Enhanced-911. As the winning standard emerges and the National Institute of Standards (NIST) defines recommended security processes for protecting VoIP traffic, MSFC will move to this technology with new buildings and installations as they emerge.

11.2.6 As is Condition

Telephone System

- Current system is no longer supported by EADS (Intecom)
    - Limited availability of spare hardware
        - Through vendor while supplies last
            - Gray market (refurbished parts)
        - No more software upgrades.
    - Increased risk due to decreasing system reliability
        - Weakened electrical components
            - 18 years of continued service are taking its toll
                - Power supplies are beginning to fail
                - Cable connectors are disintegrating resulting in short circuits
    - Increased maintenance cost
        - 20% increase over the base contract
        - 10% escalation cost with next renewal (May 1, 2003)
        - Escalation costs greater in out years
    - Current system is not disaster tolerant
            - Relies completely on building 4207

11.2.7 Systems and Support

Telephone System – PrISMS contract with hardware and maintenance support provided by Verizon Federal.

11.2.8 Facilities

Telephone System – The MSFC telephone system is a distributed system. Currently there are 17 communication node rooms.

11.2.9 Technology Flashpoints

Telephone System – The MSFC voice mail system will need to be upgraded within the next 5 years.

For the next generation telephone switch, MSFC considered VoIP versus and upgrade. MSFC chose to upgrade.

Voice Over Internet Protocol

- Why consider VoIP?
    - Emerging technology
    - MSFC has the LAN backbone to support VoIP
    - Potential for cost savings
    - Unified cable plant for voice, data, and video
- Concerns
    - Reliability
    - Network does not meet 99.999%
    - Quality of service has not reached that of traditional systems
    - Shorter life expectancy of hardware
    - 3 years versus 15 years
    - Critical systems could not be connected to VoIP system
    - Training costs
        - End users and engineers to manage system
        - Maintenance costs, both hardware and software
    - NSSTC experience
        - Reliability has been low
        - Difficult to manage and maintain
        - Has not proven to be cost effective
- Conclusion
    - Uncertainties surrounding VoIP technology far outweigh the potential benefits at this time. The technology has simply not advanced to the point where it can be considered as a viable replacement to current telephone switching technologies.

        - Since VoIP technology is continuing to develop, the system that MSFC chooses should provide a clear migration path.

Upgrade the current telephone switch

- Upgrade to an EADS PointSpan system
    - Utilizes all existing phones
        - Saves approximately $660 K
    - Requires no user training
        - Totally Transparent
        - No customer disruptions
    - VoIP capable
        - Clear and simple migration
        - Scalable up to 100%
            - Phased implementation as required
    - History
        - MSFC (18 years), MAF (17 years)
    - Maintenance
        - Would continue to be provided by Verizon
            - Knowledge base would not be lost
            - High understanding of existing architecture, cable plant, and MSFC future needs
    - No transition costs
        - Will not have to duplicate circuits
    - Lowest risk
        - **Lessons learned from successful MAF and SSC installations**
        - No technician/administration training required due to MAF installation
        - Short implementation period
        - Lowest acquisition cost
        - Continued high reliability
    - Conclusion
        - Lowest cost
        - Lowest risk

11.4 Video Component

MSFC has seven conference room with ViTS facilities with services provided through the NASA Integrated Services Network (NISN). ViTS provides interactive point-to-point and multipoint conferencing capabilities to NASA locations, selected contractor facilities, and public video conferencing services. ViTS is primarily based on circuit-switching technology, uses FTS-2001 services. NISN provided services include provisioning and maintaining special video conferencing rooms, scheduling of videoconferences, and the transmission and distribution of the video and audio among the participating locations. These services are described in more detail

via the NISN Services Document (NSD). This document can be found online at http://www.nisn.nasa.gov.

Relevant Industry and NASA Standards NASA ViTS uses standard International Teleconferencing Union (ITU) H.320, H.263, G.722 and G.728 compression formats.

Future Direction MSFC will be capable of sharing broadcast quality digital video in non real-time via the NASA WAN utilizing encoder/decoders (CODECS) with FTP capability. This capability will supplant the use of satellite and overnight shipping to share video between centers. NASA TV will be converted from it's current single channel analog NTSC architecture to a multiple channel digital architecture. MSFC will contribute live broadcast quality digital video via the NASA WAN. The new digital architecture will be Standard Definition Television (SDTV), but could be upgraded in the future to include a single High Definition Television (HDTV) channel.

Internally, MSFC will include desktop video services to compliment and possibly supplant closed circuit cable television systems. With networks of 100bT multi-cast technology, desktop video channels can be improved and quality enhanced.

Marshall Space Flight Center offers a variety of video services from live production to video teleconferencing.

Video services include Video Teleconferencing Systems (ViTS), digital video recording and production, video distribution systems, and video repositories. These video services may support multiple key mission responsibilities of NASA in addition to servicing general purpose communication functions.

NASA is charged to provide the highest quality operational support to the Office of Public Affairs and NASA's programs as related to the Agency's statutory obligation to provide for the widest and most practicable dissemination of information to the public. NASA Television operates as a primary distribution point for the majority of NASA's video to U.S. national and local media, international media, and other clients. In addition, video data and distribution is important to manned space mission operations, Earth and space science programs, and various aspects of technology programs. Finally, video distribution, videoconferencing and audio/visual capabilities are important contributors to automating or facilitating many general purpose functions such as meetings, conferences, and general employee communication. The mix of criticality and degree of functionality at each Center is dependent upon its particular mission role.

11.4.1 As is Condition/Systems description and Operational Concept/Capabilities

Every Center has one or more ViTS facilities with services provided through the NASA Integrated Services Network (NISN). Typical configurations are summarized below, but details are available only in Volume 2. NASA Video Teleconferencing Service (ViTS) is an Agency-Wide NISN provided service for video teleconferencing. ViTS provides interactive point-to-point and multipoint conferencing capabilities to NASA locations, selected contractor facilities, and public video conferencing services. ViTS is primarily based on circuit-switching technology, uses FTS-2001 services, and supports standard International Teleconferencing Union (ITU) H.320, H.263, G.722 and G.728 compression formats. NISN provided services include provisioning and maintaining special video conferencing rooms, scheduling of videoconferences, and the transmission and distribution of the video and audio among the participating locations. These services are described in more detail via the NISN Services Document (NSD). This document can be found online at WWW.NISN.NASA.GOV.

Audio/Visual services provide basic AV support of major meeting areas and conference areas within NASA Centers.
Each Center has some capacity for video documentation and production. Centers with C-band uplink capability contribute directly to live programming on NASA TV. NASA TV consists of a single analog NTSC video channel available on a satellite transponder. Each Center also has some capacity for distributing video internally through a cable distribution system.
To-Be:

Each Center will soon be capable of sharing broadcast quality digital video in non real-time via the NASA WAN utilizing encoder/decoders (CODECS) with FTP capability. This capability will supplant the use of satellite and overnight shipping to share video between centers. NASA TV will be converted from it's current single channel analog NTSC architecture to a multiple channel digital architecture. Each Center will be capable of contributing live broadcast quality digital video via the NASA WAN. NASA HQs will be able to program up to 4 digital channels simultaneously for uplink at the GSFC uplink facility. The new digital NASA TV architecture will be Standard Definition Television (SDTV), but could be upgraded in the future to include a single High Definition Television (HDTV) channel.

Upgrades to the video documentation capability for shuttle ascent and landing at the launch complexes and Cape Canaveral Eastern Range are planned in response to the Columbia Accident. HDTV cameras are to be placed at strategic locations on and around the launch complex, and on mid and long range tracking camera sites. HDTV video from each location will be then be distributed as data files via either satellite or terrestrial circuits to the analysis labs at MSFC and JSC shortly after launch to meet early mission incident reporting requirements.

Internally, Centers are expanding desktop video services to compliment and possibly supplant closed circuit cable television systems. As LANs are upgraded to 100bT multi-cast technology, desktop video channels can be improved and quality enhanced.

NASA TV Upgrade

NASA Television is a resource designed to provide real-time coverage of Agency activities and missions, as well as providing resource video to the news media and educational programming to teachers, students and the general public. Current technologies are utilizing analog technologies that will be eventually phased out over the next three to five years. Due to technological obsolescence, NASA needs to upgrade its video distribution system to an architecture that will facilitate communication via multiple simultaneous digital television channels from more than one location. NASA has planned to convert its television distribution system to an all-digital transmission network. This network would provide connection to all NASA centers. This upgrade is planned for FY2004.

NASA needs to migrate to a fully digital distribution network and multiplex from two to five video sources. This will provide the Agency with more flexibility to share with the public its myriad of activities. This will require a large-scale implementation effort including equipment acquisition and additional labor for implementation. The following list is an outline of the implementation process:

1.Conducting a study to determine the end users of NASA TV that will require a site receiver (demultiplexer/decoder unit).
2.Procure MPEG-2 CODECs (encoder/decoder), multiplexers, and related hardware for each Center with satellite uplink capability at GSFC.
3.Procure and distribute MPEG-2 demultiplexer/decoder units for each commercial, educational, and government facility currently receiving NASA TV.
4.Enable the NASA Wide Area Network for transmission of MPEG-2 via terrestrial circuits.
5.Expand NASA's overall system capabilities by providing the other NASA Centers with MPEG-2 CODECs and terrestrial circuit transmission hardware.

Video Teleconferencing

NASA Video Teleconferencing Service (ViTS) is an Agency-Wide NISN provided service for video teleconferencing. ViTS provides interactive point-to-point and multipoint conferencing capabilities to NASA locations, selected contractor facilities, and public video conferencing services. ViTS is primarily based on circuit-switching technology, uses FTS-2001 services, and supports standard International Teleconferencing Union (ITU) H.320, H.263, G.722 and G.728 compression formats. NISN provided services include provisioning and maintaining special video conferencing rooms, scheduling of videoconferences, and the transmission and distribution of the video and audio among the participating locations. These services are described in more detail via the NISN Services Document (NSD). This document can be found online at WWW.NISN.NASA.GOV.

MSFC ViTS Facilities are composed of three general categories: Full-Service, Video Roll-About (formerly Low-Bandwidth Video), and Desktop Appliance.

MSFC has eight Full-Service systems: These systems consist of a room control system, multiple displays/projection screens, higher-end codecs, a full voice conferencing package, and an Interactive Graphics Workstation.

MSFC has 16 VRA/LBV Systems: These systems are primarily small, portable conferencing units that can be interfaced with other systems such as multimedia or voice conference packages. Note that MSFC also supports 4 VRA systems (operating on a Virtual Private IP Network) located at HQ, LaRC, DFRC, and GRC.

MSFC has two Desktop Appliance Systems: These are small desktop videoconferencing units that are connected to a private IP network of similar devices supporting the HQ Administrator, Deputy Administrator, Associate Administrators, NASA Center Directors and select CIOs located across the agency.

TV Studio

Marshall TV provides video production capabilities, live television event support, real time NASA Mission coverage, and, research and development documentation. MSFC TV plays a significant role in disseminating information to the public. MSFC facilities include a full TV studio and video-editing suite. MSFC TV Studio delivers in virtually any tape or digital format. They also provide: satellite up-links and down-links; remote production, using a new state-of-the-art, Mobile Production Facility; audio and video recording and duplication; live shots; script writing; narration; television training. The TV studio produces shows for "The Learning Channel" and "NASA Select TV.

Marshall TV provides a variety of animation types deliverable on several media options. 3D modeling and animation can be done using high-end, professional, animation software packages. Traditional "cel" type and 2D animation can also be provided using modern digital solutions. The finished product can be delivered on any type of videotape format as well as digital files on CD, Jazz cartridge, Zip Disk, or other media.

Marshall TV has two complete multimedia authoring stations. Services provide include PowerPoint presentations to full-blown, interactive, multimedia presentations using digital video, custom graphics, sound effects, music, narration, and animation.

Conference Room A/V Support

MSFC provides a full line of Conference Room Electronic Services to meet specific user and project needs. Testing and product evaluation has allowed MSFC to offer modular room systems utilizing Liquid Crystal Display (LCD) Video projectors, Interactive Whiteboards, and related systems to maximize capability and simplify operation.

Video Distribution System

MSFC supports a Center wide Cable Television system that permits users to view MSFC selected channels, custom programming and selected playback services. Single Channel and Multi-Channel services are provided depending on availability to user location. Additionally, installation, relocation, and maintenance support for MSFC Cable Television sets and VCR's is

provided to fulfill customer requirements. A majority of key building locations is equipped with broadband CATV service supporting user access to MSFC's 14 supported channels.

Desktop TV System
Currently in pilot mode, Desktop TV will provide a service similar to the Video Distribution System directly to users' desktop computer. Using streaming technology and multicast IP, the service will allow users to view selected channels in a browser window. Besides live content, various on-demand video will also be available.

In production, MSFC will operate encoders for live channels provided by the TV Studio, and servers as necessary for both live and on-demand content. Initially, content will be provided primarily in the proprietary Real format. The target is to eventually move to open standards, such as MP4 encoding.

Besides content made available from Marshall TV, both live and on-demand en-coded content will be available to other NASA Centers. Encoded content, both live and on-demand, from other Centers will be available to Marshall users. Sharing of content will be across the NISN network. Initially, sharing may involve point-to-point connections between Real servers. Ultimately, multicast across the Wide Area Network will allow very efficient sharing of content throughout NASA; each Center can choose what to allow through their firewall.

For sharing of content to work, there has to be a way to communicate what content is available. MSFC will provide a content management system for streaming content that will be available to Agency content providers, Desktop TV users will have a guide showing available channels and on-demand content.

11.4.2 Systems and Support

NASA TV Upgrade: MSFC provides engineering, project management, procurement and training in support of the NASA TV upgrade project.

MSFC TV Studio: MSFC TV Studio has special video and editing systems to provide the required services. MSFC TV support staff includes writers, directors, producers, camera operators, editors, and engineers.

MSFC Conference Room A/V Support: MSFC provides installation, training, user documentation, and ongoing maintenance to support their conference A/V room services.

Video Teleconferencing: NISN provides NASA with its video teleconferencing services. NISN requires MSFC to provide a services coordinator for their video conferencing rooms. This coordinator is the single local point of contact to schedule a video teleconference and to schedule any other use of the video conferencing facilities. To perform their scheduling tasks, services coordinators require specific equipment, system accounts and forms.

Desktop TV: MSFC provides encoding and servers for Marshall TV content. MSFC also coordinates additional streaming sources from other NASA sources. NISN provides connectivity for intercenter sharing of content.

11.4.3 Facilities

As the services are described above, adequate facilities are provided by MSFC to host required equipment and personnel. The majority of the facilities are located in or nearby the Center Communications Building.

11.4.4 Technology Flashpoints

We have no technology flashpoints that are preventing MSFC from being successful. Budget is the only thing that is holding MSFC back from advancing to new technologies.

11.4.5 Compliance

There are no NASA or Federal regulation to comply with. MSFC video services comply with industry standards.

11.4.6 To Be Condition

NASA TV needs to migrate to a fully digital distribution network and multiplex from two to five video sources. This will provide the Agency with more flexibility to share with the public its myriad of activities. This will require a large-scale implementation effort including equipment acquisition and additional labor for implementation.

Marshall TV's future includes a fiber optic network for server storage of digital media, a conversion to digital video, and adoption of the HDTV standard (with a 16x9 aspect ratio). High definition cameras will be utilized for video content that requires a higher resolution than current digital standard definition.

In production, the desktop TV system at MSFC will operate encoders for live channels provided by the TV Studio, and servers as necessary for both live and on-demand content. Initially, content will be provided primarily in the proprietary Real format. The target is to eventually move to open standards, such as MP4 encoding.

11.4.7 Referenced Documents

NASA DTV Program Plan

A copy of this document can be obtained by contacting the Digital Television (DTV) Project Office or on the NASA DTV web site. The DTV web site is located at http://www.msfc.nasa.gov/DTV

Digital Television Standards for NASA – NASA-STD 2818
This NASA standard may be viewed and downloaded from our NASA Standards Home page http://standards.nasa.gov .

NASA Video Distribution System Upgrade Project Plan
A copy of this document can be obtained by contacting the Digital Television (DTV) Project Office or on the NASA DTV web site. The DTV web site is located at http://www.msfc.nasa.gov/DTV

Video Teleconferencing System
For additional information on NASA's video teleconferencing system please see the following web site http://www.nisn.nasa.gov/serviceinformation.htm

MSFC TV Studio
For additional information on MSFC's TV studio and multimedia services, please see the following web site http://msfctv.msfc.nasa.gov/services.html

11.5 Electronic Work Environment Segment

11.5.1 Messaging and Collaboration Component

For the purposes of this document, the Electronic Messaging Service is considered to be those set of technologies that enable the server-side, store-and-forward capability known as electronic mail. The electronic mail client/end-user applications are discussed in the Collaborative tools section of the Applications definition in this document. The Messaging Service component consists of the systems that support message transport, delivery and storage. Electronic Messaging is used by the electronic mail stand-alone application and is also integrated into many "mail-enabled" applications including workflow, action tracking and financial systems.

Relevant Industry and NASA Standards. As a result of the NASA Electronic Messaging initiative, NASA has a relatively mature implementation of a standards-based electronic mail environment. The current server-side technology standards are the Internet Engineering Task Force (IETF) Post Office Protocol 3 for message storage and retrieval and the IETF Simple Mail Transfer Protocol (SMTP) for message transport.

Future Direction: Electronic Messaging will continue to be a key capability for NASA end-users. The server-side systems will continue to rely on SMTP and the associated protocols as they mature. The message store capability will move toward the Internet Messaging Access Protocol (IMAP) as the protocol is evolved by the IETF and implemented by commercial

vendors. It is important to keep in mind the trend toward Browser based access to message store capabilities and support for HyperText Markup Language (HTML) formatted messages. Subsequent server-side implementations must support these capabilities. Another important direction of the messaging service is its integration with the Certificate Management service enabling digital signature and data security across the messaging service.

11.5.2 Information Broker

The Information Broker Service provides the storage, cataloging, organization, presentation, searching, indexing and distribution of information objects. This service interoperates with the File System infrastructure described in Section 7.3.6, and may be thought of as providing "unstructured" (where "structured" means formal relational, and other, database schemes) storage of text, drawings, images (still and moving), and many other object types to individual end-users, workgroups and the Agency. Through proprietary and standards-based mechanisms the Information Broker provides these information objects to end-user applications and other Services. In some cases, the Information Broker stores and provides structured "meta-data" (e.g., creator, creation and update date, keywords, etc.) about the information object. It also performs cataloging and indexing for information object name and attribute search, as well as, full text search and retrieval. The goal of the Service is to locate and retrieve information objects from any authorized environment. One aspect of the Information Broker also functions as an information object broker for exchange of software code. The Information Broker must interoperate with the Security Service to authenticate users and grant access to these distributed objects. There are four primary categories of Information Broker in use in the Agency today: (a) Unstructured Object Provision, (b) Document Management Systems, (c) Object Brokers, and (d) Query Processing.

a. Unstructured Object Provision. There are several emerging and legacy mechanisms that enable the provision and sharing of "unstructured" information (text, documents, images) to end-user, client applications. These include proprietary, file and directory-based network operating system schemes (e.g., UNIX, Novell, NT, mini-computer operating systems, mainframe computer operating systems); proprietary applications strategies (e.g., Lotus Notes); emerging standards-based file provision and sharing methods such as SMB and DFS; and the emerging standards-based WWW, Hypertext Transport Protocol (HTTP) and its associated, client-oriented HTML.

Relevant Industry and NASA Standards. HTTP and HTML. File System standards are addressed under the Infrastructure File System Service (see 7.3.6). There are no other NASA standards in this area at this time.

Future Direction. Most legacy file sharing strategies are moving toward native, and/or gatewayed, universal client (Web Browser) delivery.

b. Document Management Service. The Document Management Service (DMS) facilitates the formal distribution, storage and retrieval of electronic documents. As electronic documents are

used increasingly during the creation and distribution process, management of this resource becomes critical. The DMS shall provide the ability to post documents to directories and to convert them to desired formats. The DMS shall interface with the Query Processing Service to store meta-data about the document to facilitate document retrieval. The DMS shall provide the option of storing the full text of the document for full text search and retrieval. The DMS shall allow the printing of the document to remote or high volume printers. The DMS shall include the ability to download and convert documents to useful formats for viewing or local use. The DMS shall provide the ability to place a document for review and collect comments on the document from reviewers, maintain various versions of the documents and revision histories.

Relevant Industry and NASA Standards. A consortium of vendors has been working on an Open Document Management API (ODMA) to provide calls for common document management functions for use by cross platform clients. Rather than each document management system vendor having to do custom integration with each application, ODMA enables each DMS and application vendor to do the job once, for all. There are no other proposed standards.

The classification of Agency Documents shall follow the NASA Files Classification and related STI document classification standards.

There are no NASA standards in this area at this time.

Future Direction. MSFC has invested in Documentum's Enterprise Content Management to provide the Center a platform upon which to manage its Knowledge Assets whether documents or other rich media.
With an improved user interface, MSFC will use this system for classification of data for workflow capability and web content management.

c. Object Brokers. The Object Broker Service provides the support infrastructure for deploying object-oriented applications. An application client invoking a method on an object generates a request, which is forwarded or redirected by an object request broker to the appropriate object implementation. Objects exhibit the following properties:

Encapsulation: The internal implementation of an object can be made inaccessible to the program that uses the object.
Inheritance: A new type of object can be derived from an existing type.
Polymorphism: Objects may respond to a common set of operations in different ways.

Object Broker Service can span a variety of development and execution time requirements, including: streams, collections, instance management, persistence, concurrency, notification, and security. An object framework is a cohesive set of related objects that reduce the amount of code needed to develop, test, and debug an application. Frameworks also allow two subsystems to interact while protecting them from knowledge of each other. The Object Broker Service shall provide for distributed invocation of methods across a network. The Object Broker Service framework shall include support for streams, collections, instance management, persistence, concurrency, and notification. The Object Broker Service shall be integrated with the Directory

and Security Services. The Object Broker Service shall be engineered, deployed, and staffed for continuous, high-availability operation.

Relevant Industry and NASA Standards. The Object Management Group (OMG) ratified Version 2 of the Common Object Request Broker Architecture and Specification (CORBA). OMG has also specified transaction processing services for CORBA; other specifications are being developed. Microsoft Corporation publishes Version 2 of Object Linking and Embedding (OLE) , which includes OLE Automation, COM communication, and integration services.

There are no NASA standards in this area at this time.

Future Direction. The industry has not settled on a single object strategy. An Agency strategy for Objects Service cannot be recommended until competing object services evolve or greater industry consensus becomes apparent.

d. Query Processing. This service provides access to submit and query a database management system for ad hoc or structured reports in a distributed environment. The Query Processing Service shall provide record-oriented and relational data access. The Query Processing Service shall be integrated with the Directory and Security Services. The Query Processing Service shall be engineered, deployed, and staffed for continuous, high-availability operation.

Relevant Industry and NASA Standards. X/Open Indexed Sequential Access Method (ISAM) supports record-oriented data access and management. ISO 9075 specifies the Structured Query Language (SQL) for relational data. X/Open Structured Query Language (SQL) is based on ISO 9075, but includes some widely-implemented extensions. The SQL Access Group, a technical working group within X/Open, has developed Data Management: SQL Call Level Interface (CLI), a portable API for database access. ISO 9579 for Remote Database Access (RDA) is a standard protocol for distributed data access. The OLAP Council was established in January 1995 to serve as an industry guide and customer advocacy group for on-line analytical processing (OLAP) server technology. OLAP describes a class of technologies that are designed for live ad hoc data access and analysis. The Council is preparing a specification for a standard API, which will consist of several levels, beginning with display and navigation of data. X/Open Indexed Sequential Access Method (ISAM) is recommended as the Agency specification for record-oriented data access. X/Open Structured Query Language is recommended as the Agency specification for relational query language. X/Open Data Management: SQL Call Level Interface (CLI) is recommended as the Agency call-level interface for distributed data access. Data warehouse facilities that could possibly be developed as part of the Query Processing Service should track emerging OLAP specifications. There are no NASA standards in this area at this time.

Future Direction. SQL and ISAM are universally-supported by the information systems industry. Support for Call Level Interface is growing, spurred in large measure by Microsoft's Open Data Base Connectivity (ODBC) product, Version 3.0 of which is CLI-compliant. Java Data Base Connectivity (JDBC) is an API for Java programmers to access query services.

11.5.3 *Real-Time Collaboration*

In order to collaborate in a digital environment, end-users require not only an end-device and a client application, but also, a common 'digital space' - a server-side capability that enables end-users to interact in this digital space. The technologies involved include hardware (servers, routers, switches, etc.) and software and, most importantly, standard protocols that enable disparate hardware and software solutions to interoperate within this collaborative environment(s). This section refers to technologies that enable real-time, interactive, synchronous collaborative activities such as audio and video conferences and application and file sharing. Asynchronous, off-line, file sharing technologies are covered in Section 7.2.2, "Information Broker".

Relevant Industry and NASA Standards. Ames Research Center has released a draft standards document that commits the Agency to the emerging ITU T.120 protocol for collaborative sessions like audio/video conferencing and application and file sharing. This document further commits the Agency to H.323. There are no NASA standards in this area at this time.

Future Direction. Collaborative services will become increasingly important to NASA. NASA Standards are expected to become established as issues associated with product interoperability, bandwidth and commercial availability of products are addressed.

The email system at MSFC is comprised of several different components. The entry point is the Syntegra X.500 system. This system delivers inbound mail to the Trend Micro virus wall/spam filter. The Trend Micro system uses the DNS to deliver mail to the UMS Microsoft Exchange system, the MSFC Microsoft Exchange system, and the UNIX POP servers which run the Qualcomm QPOPPER software. The MSFC Exchange computers have front end Internet Mail Servers that deliver inbound mail to the rest of the MSFC Exchange Mail system and also support a site connector that handles mail to and from the NSSTC (National Space Science and Technology Center).

Outbound mail is routed through the X.500 system and delivered to the internet. Mail between systems is also delivered to the X.500 system and rerouted to the various systems via the Trend Micro Virus Wall.

11.5.4 As is Condition

The Syntegra software is Version 2000 running on Solaris 2.8. The computer is Sun Microsystems Netra 1405. The virus wall is made up of 2 Dell 2650 PowerVaults running Microsoft Windows 2000 server with service pack 3 applied. The Trend Micro Interscan virus software is version 3.53 running scan engine 6.510 and the Trend Micro Interscan eManager is version 3.52. The MSFC Microsoft Exchange internet mail connectors run on 2 Dell 2650 PowerVaults. The operating system is Microsoft Windows 2000 SP3. Microsoft Exchange is version 5.5 SP4. MSECHO1, MSECHO2, MSECHO3 and MSECHO4 are Dell 6450 PowerVaults. MSECHO6 is a Dell 6650 Power Vault configured to be a POP server.

MSFCMSG7 is a Dell 6400 Power Vault. These computers are running Windows 2000 SP3 with Microsoft Exchange 5.5 SP4.

11.5.5 Systems description and Operational Concept

Figure 63

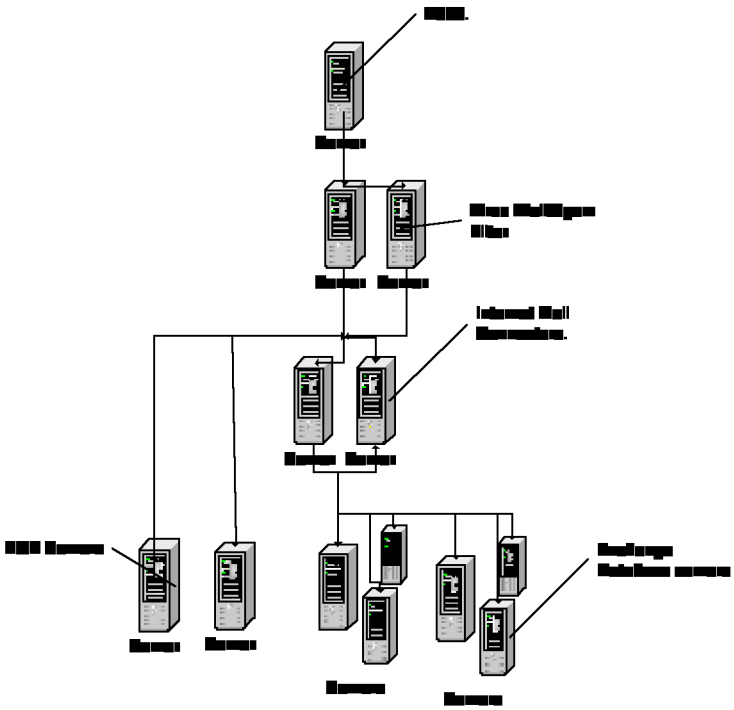

Inbound mail is delivered to the X.500 system though a firewall. The X.500 system then delivers the mail to the virus wall/spam filter, where it is checked for viruses and spam. The virus wall then does a lookup in the DNS to find which server to deliver the mail. If an MX record exists for a mail system at MSFC, the mail is delivered. If no MX record is found, the mail is returned to the sender as No Host Found. The POP servers are msfcmail.msfc.nasa.gov and msfcmail1.msfc.nasa.gov. The exchange system is msg.msfc.nasa.gov. The DNS round robin is used to load balance between the 2 Exchange IMS servers. The Exchange IMS computers then deliver mail to the exchange system and individual mailboxes.

Outbound mail is delivered to the X.500 system. Mail bound for other MSFC systems is treated as inbound mail. Mail directed to non-MSFC mail systems is delivered to the internet via MX records in the DNS. Again, if no MX record is found, the mail is returned to the sender. If the X.500 system is unable to contact the server defined by the MX record, the connection times out after 16 hours, and the mail is returned to the sender.

11.5.6 Facilities

MSECHO1, MSECHO2, MSECHO6, MSFCMSG7, and MSVIKING1 are in 4207. MSECHO3 and MSECHO4 MSVIKING2 are in 4663.

11.5.7 Technology Flashpoints

Implementation of One NASA Electronic Messaging System (OES). We are at a crossroads on whether we should move to Exchange 2000 or wait for the implementation of OES. There have been no dates given on when OES will be fully implemented and whether it will be centralized or distributed. MSFC is prepared to move to Exchange 2000 as soon as the MSFC Windows 2000 Forest (Active Directory) is stable. Microsoft says they are going to drop support for Exchange 5.5 in December 2003.

Implementation of Exchange 2000. A move to Exchange 2000 could possibly break users at the NSSTC because of the lack of Microsoft support for site-to-site connectors in Exchange 2000. We must be able to maintain a shared calendar with the NSSTC.

11.5.8 Compliance

NASA-STD-2804E Minimum Interoperability Software Suite
NASA-STD-2807C The NASA Directory Service -Architecture, Standards, and Products
NASA-STD 2808A Interoperability Profile for NASA E-Mail Clients

11.5.9 Capabilities

The following are Exchange capabilities: POP3/IMAP4 support, full Outlook support, shared calendaring, return receipts with other mail systems that support it, tasks tracking, work flow, Internet mail connector, and mail tracking within Exchange.

11.6 Public Web Component

MSFC places its public web services in an external, public network as defined in NASA-STD-2813. Content is being supplied to the NASA portal, particularly in the Education and Kids section.

<u>Relevant Industry and NASA Standards</u> Current market-leading browsers, along with several of their competitors, provide excellent support for Hypertext Markup Language (HTML) 4, Extensible Hypertext Markup Language (XHTML) 1, Cascading Style Sheets (CSS), European Computer Manufacturers Association (ECMAScript) (the standard version of JavaScript), and the Document Object Model (DOM).

Future Direction MSFC will continue to provide additional content to the NASA Portal. It is assumed that more public content that NASA produces will be centralized.

A farm of websites publicly available. These sites provide the public with information about NASA and NASA projects.

11.6.1 As is Condition

These websites are in all stages of completion, from concept to published. New customers are constantly requesting services, and are served in a timely and efficient manner. All new materials, whether a new site or content added to an existing site, are reviewed and approved as complying with all Federal, NASA, and MSFC rules and regulations. Published sites are being reviewed for full compliance as a part of normal maintenance activities.

11.6.2 Systems description and Operational Concept

The existing server farm is expanded as required to support customer's needs. Web services representatives meet with customers to determine their needs. Web page design, graphics, content, database access, and special scripting and applications are made available. All new websites must undergo an exhaustive Operations Readiness Review (ORR) before publishing to the public. The ORR process includes verification of data non-sensitivity, proper point of contact and responsible NASA official info, privacy notifications, Section 508 compliance, requested metrics gathering, compliance to html and browser standards, site usability and navigation good practices, approved security plan, valid links, spell checking, and all applicable laws, rules, and regulations. Once approved through an ORR, a website is made operational and available to the public.

11.6.3 Systems and Support

Combination of Solaris and NT servers. Some supported by the ODIN contract and some supported by the PrISMS contract.

11.6.4 Facilities

There are 3 Solaris based Apache web servers and 2 NT based Lotus Domino servers run by the ODIN contract in support of our Web Services. And there are 4 Solaris based servers running Apache and one running Inktomi Search Engine run by the PrISMS contract in support of our Spacelink program. All servers are located in one computer room.

11.6.5 Technology Flashpoints

-Understanding, learning and using the new One NASA Portal Content Management System in support of the 3 Education sections
-Getting up to speed with XML and finding ways to utilize this standard in a way that would provide efficiencies.

11.6.6 Compliance

All websites are designed to be compliant with:
-Privacy Act
-Section 508 of American Disabilities Act
-Child Online Privacy Protection Act (COPPA)
-IT Security Best Practices
-NASA rules for use of logos, cookies, privacy notifications, and contacts

11.6.7 Capabilities

Utilize PERL, PHP, MySQL, Oracle, Javascript, HTML, DHTML, etc.

11.6.8 To Be Condition

Future activities will continue using the current process, with the addition of a plan for periodically reviewing existing sites and sites that have incrementally changed over time. This is intended to "catch" non-compliance with new rules and regulations, find out-of-date or archaic information, and ensure that sites do not drift away from the ORR approved state.

12 John C. Stennis Space Center (SSC)

12.1 Computing Services Segment

12.1.1 Desktop Hardware & Software Component

All institutionally provided desktop hardware and services are provided through the Outsourcing Desktop Initiative for NASA (ODIN) contract at Stennis Space Center (SSC).

The ODIN Contractor is required to deliver comprehensive, end-to-end desktop, including associated capital infrastructure improvements, as well as maintenance and enhancements to that infrastructure.

With justification, waivers may be obtained allowing for acquisition of hardware, software, and services outside of ODIN. Desktop requirements for which waivers were obtained and were provided outside of the ODIN contract are all program specific and not addressed in this document.

It is the intent of the Agency to avoid obsolescence by moving from an ownership environment to a lease environment in which technology is routinely "refreshed." Through the ODIN vehicle NASA identifies requirements based on functions performed and performance rather than technology based parameters and the Configuration Control Board (CCB), which includes the ODIN contractor, identifies the specific technology on a quarterly basis.

Some associated ODIN "services" are described in other sections of this document, e.g. Data Center and Communications Services Components. Integrated Financial Management (IFM) desktop appliances are provided as ODIN seats.

12.1.2 As Is Condition

Since SSC is in the second Delivery Order of the ODIN contract most government owned desktops have been replaced by ODIN leased desktops. The system of scheduled technology refresh of hardware and software has improved the average currency of desktops in general use.

Most problems today are the result of data and logistical problems during order placing and order closeout. Managerial issues being addressed include items such as when orders cannot be rejected by the ODIN contractor, when metric clocks start, who is responsible for resolving data problems, and when due dates can be extended.

12.1.3 Systems Description and Operational Concept

There is a Center level Configuration Control Board (CCCB), chaired by the Center Chief Information Officer (CIO). This board meets quarterly and is responsible for approving proposed changes to local architectures and standards as well as assuring consistency with Agency interoperability and compatibility standards. The proposal of systems, products, and services are the responsibility of the ODIN Contractor.

The ODIN Contractor is responsible for all system-level and product-level integration testing to ensure interoperability and functionality, as well as compliance with Agency and Center Information Technology (IT) standards and architectures. The Contractor is also responsible for end-user training, documentation, help desk support, asset management, and tracking.

ODIN Desktop services are provided on a per "seat" basis, with optional service levels, where all required service components and management are bundled. The contractor maintains a "catalog" of commercially-available products and services and provides leases of these products and services for the duration of each Delivery Order.

12.1.4 Systems and Support

Desktop Seats are functionally categorized as General Purposes (GP), Scientific and Engineering (SE), Maintenance (MA), Network Attached Device (NAD), and Printer (PRN). Desktop systems are provided within each category based on functional performance and capability definitions. SSC has standardized on SE1 seats for general use; however, users are free to order other seats as is appropriate to their requirements.

The ODIN Contractor provides the tool(s) required to capture and report performance metrics. The Government requires the right to access the tools upon request. Metrics are reported in areas to measure service delivery, product availability, customer satisfaction, and service availability.

The Contractor is required to continually assess the state of technology, NASA's IT requirements and infrastructure and propose new technology and services for NASA's consideration. This shall include recommendations to change Agency and Center architectures, standards, products, systems, and services as well as to develop and maintain Emergency Preparedness and IT Security Plans and their associated procedures and implementation plans.

12.1.5 Facilities

The ODIN contractor leases building space from NASA with restricted, keycard entry. The contractor provides their own furniture, vans, and equipment used to provide desktop services.

The contractor uses standard ODIN seats to support their own staff in regular operations. These seats are tracked in ODIN and NASA requirements databases, but there is no billing to the government for these seats. ODIN provides the actual physical seats for its own use.

NASA Infrastructure equipment is provided to the contractor to provide several of the services, such as Local Area Network (LAN) communications or email services, which are bundled with ODIN desktop seats.

12.1.6 Technology Flashpoints

Because of confusion over unique ODIN service offering terminology, NASA users may occasionally order or pay for redundant or unneeded services.

Discrepancies between contractor and NASA databases cause delays and confusion.

ODIN services include basic training related to new or upgraded standard service offerings such as changes related to revised operating systems (or applications) and application specific training courses that are offered via Catalog. There is currently no typical consulting service available for NASA users to assist with how to use an application to perform a specific task, which may result in less efficient, informal consulting among government employees and contractors to accomplish their jobs.

The Agency is exploring options to the ODIN contract and may transition to another approach for providing desktop services. Uncertainties over the future of the ODIN contract could effect near term decisions regarding ODIN services, especially in the areas of funding infrastructure improvements.

Leases of services and components from the ODIN Catalog extend for the remaining term of the 3-year "Delivery Order." The price of the Catalog item is not prorated during the Delivery Order. Near the end of a "Delivery Order" it becomes economically unsound to lease some items from the Catalog. This results in either paying too much for a short term or the lease of a required component is avoided.

12.1.7 Compliance

Desktop Hardware and Software are in compliance with SPLN-2810-0001, SSC IT Security Plan, NASA-STD-2804, and NASA-STD-2805.

ODIN procedures must be in compliance with the current version of the Information Technology Security Plan for Orbiting Astronomical Observatory (OAO) ODIN IT Alliance Supported Systems at SSC.

12.1.8 Capabilities

These desktop services are bundled according to NASA's functional and performance requirements into one of several "service categories."

Currently, nine service categories are required within the desktop service, including General Purpose, laptop, Scientific/Engineering and for "not" ODIN owned or leased, maintenance only and other non-ODIN network attached devices. Any lease of a seat includes a bundle of standard services. Several optional services are also defined for each seat. Options include storage space on an ODIN server that is automatically backed up every evening with various levels of technology refreshment and printing services.

To Be Condition

Software development is in testing to support direct electronic transactions for order placing and order closeouts for seats and catalog orders from ODIN.

12.2 Application Services Component

Application services at SSC provide an end service to end-users.

Applications services include the development, operations and maintenance of applications that are not desktop service. They also include IT investments in hardware, software and services required to provide application services remote from a desktop and not provided by a Data Center, specifically design, development, help and other support, operations and maintenance.

12.2.1 As Is Condition

<u>CENTRAL ENGINEERING FILES (CEF)</u>

The Central Engineering Files (CEF) servers contain both technical drawing data and applications.

<u>EMERGENCY WARNING SYSTEM</u>

A new Lighting Detection System is currently in process of being installed at the center to alert personnel of potential and actual lightning strikes. The primary purpose of the system is to coordinate engine testing, test stand maintenance, and fuel transfers. This system will initially provide warning to Building's 4995, 4110, 4210, 1100, 2201, and 1201. Evaluation will be given to expanding the system for other locations on the center after initial installation.

<u>MAXIMO</u>

Maximo is the Corrective Maintenance and Management System (CMMS) application used to generate and track corrective and preventive maintenance activities of the facilities at SSC.

<u>TECHTRACS</u>

This center-based component of the NASA Commercialization Information Systems (NCIS) provides the day-to-day core backbone of the NCIS while providing each center a major productivity tool for accomplishing its technology commercialization activities.

12.2.2 Systems Description and Operational Concept

CEF

CEF contains AutoCAD (Computer Aided Design) drawings.

MAXIMO
Maximo is the CMMS Corrective and Preventative Maintenance tracking software. This tracks all contractor work orders.

TECHTRACS

TechTracS is the center-based component of NCIS that provides the day-to-day core backbone of the NCIS while providing each center a major productivity tool for accomplishing its technology commercialization activities.

12.2.3 Systems and Support

CEF

The CEF network consists of two servers. The application AutoCAD (as well as drawing data) is stored on this system for the engineering departments to utilize.

MAXIMO

Maximo is currently running in a client/server environment.

TECHTRACS

The TechTracS server is a Windows 2000 server. The system files are backed-up everyday, and the System Administrator resides in the same building.

12.2.4 Facilities

CEF

The two CEF servers are located in Building 2104 in a locked storage facility.

MAXIMO

The Maximo database server (MSSFOSPROD) is housed in the Building 2204. The application source resides on the ODIN server FS1.

TECHTRACS

The TechTracS servers are located in Building 2105 in a key-locked room with a dedicated air conditioner set-up to run twenty-four hours per day, seven days a week.

12.2.5 Technology Flashpoints

Because Maximo is seated on the ODIN server FS1, operational downtime could be a hindrance to SSC.

- **Compliance**

Applications are in compliance with SPLN-2810-0001, SSC IT Security Plan.

12.2.6 To Be Condition

CEF

No changes anticipated.

MAXIMO

Future plans will upgrade Maximo to a web-enabled version.

TECHTRACS

In the near future, SSC is planning to provide an available back-up computer for TechTracS.

12.3 Data Center Component

SDC

The Stennis Data Center (SDC) is the NASA Data Center at SSC managed within the Test and Technical Services Contractor (TTSC) in order to support, host, and maintain all institutional data services for NASA and NASA contractors.

ODIN

The ODIN Data Center is the NASA Outsourced Data Center at SSC and is managed within the ODIN Contract in order to support, host, and maintain all outsourced Information Technology (IT) support services for NASA and NASA Contractors.

12.3.1 As Is Condition

SDC

There are currently forty-nine (49) servers supporting the infrastructure, including production, development, and test servers. Operating systems include NT, W2K, UNIX, and Linux. Microsoft SQL Server and MySQL are approved database tools. Site Specific Applications include applications such as Funds Availability System (FAS), Stennis Request System (SRS), Access Request System (ARS), and ODIN WEB Seat Ordering Application (OWEB).

The SDC also has a shared Logical Partition (LPAR) within the NASA ADP Consolidation Center (NACC) at Marshall Space Flight Center (MSFC). This includes NASA Acquisition Management System (AMS), NASA Property Disposal Management System (NPDMS), NASA Equipment Management System (NEMS), NASA Supply Management System (NSMS) and Integrated Financial Management Program (IFMP).

ODIN

There are currently forty-two (42) systems supporting the outsourced IT services that include file services, email, x.500, print services, network, and domain structure.

ODIN manages the GFE Blackberry Enterprise server. This particular service allows for a wireless communication between the PDA and the Blackberry Enterprise server as well as allows a link into the Exchange server to retrieve e-mails, calendar, and contact information.

12.3.2 Systems Description and Operational Concept

SDC

The SDC provides host services to include, but not limited to, the following:

-System Administration
-Data Backup and Recovery (including Disaster Recovery)
-Security (physical, administrative, and systems)
-Database Administration
-Production Control
-Help Desk Services
-Software and Hardware Configuration Management

-Capacity Planning

These services are provided in support of Commercial-Off-The-Shelf (COTS), user-developed software, web page development, and application development.

The servers of the SDC process the following types of information:
-Mission (MSN) Information, Business and Restricted Technology (BRT), Administrative (ADM), Scientific, -Engineering, and Research (SER), and Public Access (PUB).

ODIN

The ODIN Data Center provides host services to include, but not limited to, the following:

-System Administration
-Data Backup and Recovery (including Disaster Recovery)
-Security (physical, administrative, and systems)
-Help Desk Services
-Software and Hardware Configuration Management
-Capacity Planning

12.3.3 Production Network Diagrams

Figure 64

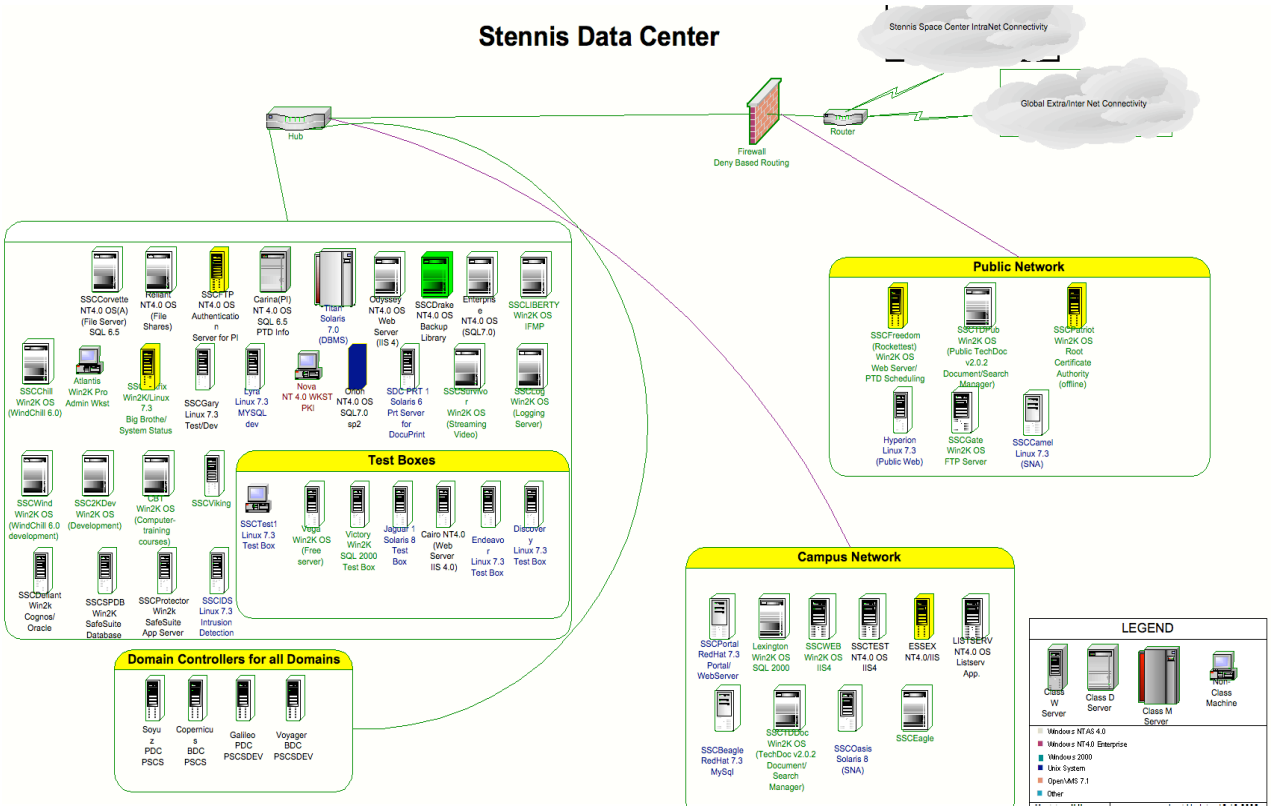
Stennis Data Center
Stennis Space Center IntraNet Connectivity
Global Extra/Inter Net Connectivity
Hub
Firewall
Deny Based Routing
Router
SSCCorvette NT4.0 OS(A) (File Server) SQL 6.5
Reliant NT4.0 OS (File Shares)
SSCFTP NT4.0 OS Authentication Server for PI
Carina(PI) NT 4.0 OS SQL 6.5 PTD Info
Titan Solaris 7.0 (DBMS)
Odyssey NT4.0 OS Web Server (IIS 4)
SSCDrake NT4.0 OS Backup Library
Enterprise NT4.0 OS (SQL7.0)
SSCLIBERTY Win2K OS IFMP
SSCChill Win2K OS (WindChill 6.0)
Atlantis Win2K Pro Admin Wkst
SSCUnix Win2K/Linux 7.3 Big Brothe/ System Status
SSCGary Linux 7.3 Test/Dev
Lynx Linux 7.3 MYSQL dev
Nova NT 4.0 WKST PKI
Orion NT4.0 OS SQL7.0 sp2
SDC PRT 1 Solaris 6 Prt Server for DocuPrint
SSCSurvivor Win2K OS (Streaming Video)
SSCLog Win2K OS (Logging Server)
SSCWind Win2K OS (WindChill 6.0 development)
SSC2KDev Win2K OS (Development)
CBT Win2K OS (Computer-training courses)
SSCViking
SSCDefiant Win2k Cognos/ Oracle
SSCSPDB Win2K SafeSuite Database
SSCProtector Win2k SafeSuite App Server
SSCIDS Linux 7.3 Intrusion Detection
Test Boxes
SSCTest1 Linux 7.3 Test Box
Vega Win2K OS (Free server)
Victory Win2K SQL 2000 Test Box
Jaguar 1 Solaris 8 Test Box
Cairo NT4.0 (Web Server IIS 4.0)
Endeavor Linux 7.3 Test Box
Discovery Linux 7.3 Test Box
Domain Controllers for all Domains
Soyuz PDC PSCS
Copernicus BDC PSCS
Galileo PDC PSCSDEV
Voyager BDC PSCSDEV
Public Network
SSCFreedom (Rocketest) Win2K OS Web Server/ PTD Scheduling
SSCTDPub Win2K OS (Public TechDoc v2.0.2 Document/Search Manager)
SSCPatriot Win2K OS Root Certificate Authority (offline)
Hyperion Linux 7.3 (Public Web)
SSCGate Win2K OS FTP Server
SSCCamel Linux 7.3 (SNA)
Campus Network
SSCPortal RedHat 7.3 Portal/ WebServer
Lexington Win2K OS SQL 2000
SSCWEB Win2K OS IIS4
SSCTEST NT4.0 OS IIS4
ESSEX NT4.0/IIS
LISTSERV NT4.0 OS Listserv App.
SSCBeagle RedHat 7.3 MySql
SSCTDDoc Win2K OS (TechDoc v2.0.2 Document/ Search Manager)
SSCOasis Solaris 8 (SNA)
SSCEagle
LEGEND
Class W Server
Class D Server
Class M Server
Non-Class Machine
Windows NT/AS 4.0
Windows NT4.0 Enterprise
Windows 2000
Unix System
OpenVMS 7.1
Other

Figure 65: ODIN

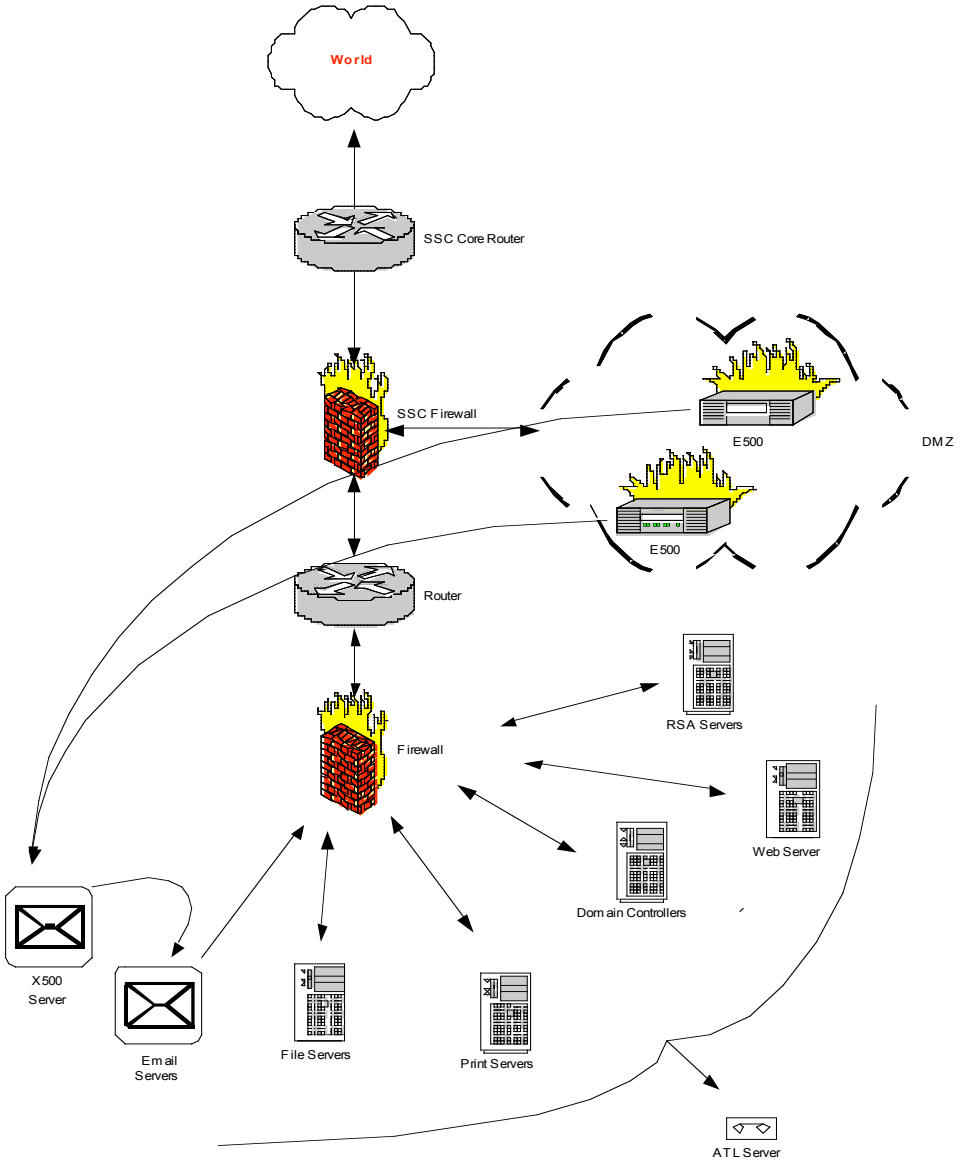

12.3.4 Systems and Support

SDC

The SDC has been designated by the Chief Information Officer (CIO) as a "Major Information System" for Office of Management and Budget (OMB) A-11 reporting purposes.
The SDC Hardware is maintained by 24 x 7 hardware maintenance contracts that ensure a 4-hour response time to hardware issues. Software maintenance contracts are also in place and ensure timely response according to the contract in place for that particular software.

ODIN

The ODIN Network has been designated as Mission Essential Infrastructure and Special Management Attention by the Agency CIO.

The ODIN Data Center Hardware is maintained by 24 x 7 hardware maintenance contracts that ensure a 4-hour response time to hardware issues with next day delivery of parts. Software maintenance contracts are also in place and ensure timely response according to the contract in place for that particular software.

12.3.5 Facilities

SDC

The SDC is located in Building 1110 on a raised floor facility, approximately 1200 Sq. ft., supported with three air handling units (AHUs). The systems are supported by an Un-interruptible Power Source (UPS) and also by a fail-over Diesel Generator.

ODIN

The ODIN Data Center is located in Building 1110 on a raised floor facility, approximately 700 Sq. ft. The systems are supported by an Un-interruptible Power Source (UPS) and also by a fail-over Diesel Generator.

12.3.6 Technology Flashpoints

As technology steadily advances, both the SDC and ODIN should remain abreast, making upgrades as needed, to avoid any risk factors. However, if SSC were unable to progress with technology, various problems would result.

More specifically, technology flashpoints are listed as, but not limited to, the following:

SDC

As the Data Center grows, bandwidth could become an issue affecting response time to resources in the Data Center.

A "hot site" needs to be setup to ensure a quick response to any type of disaster.

The SDC may face potential problems during the Active Directory transition.

ODIN

ODIN may face potential problems during the migration to Active Directory as well.

12.3.7 Compliance

The SDC and ODIN are in compliance with NPG 2810.1, Security of Information Technology, and the Center IT Security Plan.

SDC and ODIN are also in compliance with their respective IT Security and Disaster Recovery Plans (SPLN-2810-0001, SPLN-2810-00047, and SPLN-2810-0041).

12.3.8 Capabilities

<u>SDC</u>

- System Administration:

  System Administration includes server level security, system hardware and software upgrades, server capacity monitoring, server log review, server patches, software installation, configuration control, and problem management.

- Data Backup and Recovery (including Disaster Recovery):

  Full and incremental backups on all systems are performed on a daily and weekly schedule, file restores, data integrity.

  The Disaster Recovery Plan is critical to SSC to ensure restoration of potential damages that may occur (e.g., flooding).

- Security (physical, administrative, and systems):

  The SDC is housed in a secure facility with key-card entry system checkpoints at all entries into the building and the SDC. Administrative security and system security are provided by the Systems Administrators and follow SSC's IT Security Plan.

- Database Administration:

  Stennis SDC provides database administration for ADABAS on an IBM mainframe platform, Microsoft SQL Server 2000, MySQL and Oracle RDBMS (Relational Database Management System) on Windows 2000 and LINUX operating systems.

- Production Control:

  Operations runs production control jobs assigned in support of NASA Finance and NASA Contractor data on a daily, weekly, and monthly schedule. This includes input files, output files, and reports.

- Help Desk Services:

  Operations acts as the SDC Helpdesk by providing problem management metrics and reports as well as assigning Helpdesk calls to the appropriate responsible persons for resolution, or the call is handled at the Tier I level.

- Software and Hardware Configuration Management:

  The SDC is operated with a Configuration Control Board for all software and hardware changes. This Board approves all changes and aids in the scheduling of the scheduled production moves on a System Build Schedule.

- Capacity Planning:

  Systems Administration and Operations review system logs for performance and capacity planning purposes. Future projects are also taken into consideration for capacity planning. Capacity planning is collaborated with the NASA Technical Monitor.

ODIN

- System Administration:

  System Administration installs, maintains, and monitors the ODIN Data Center servers.

- Data Backup and Recovery (including Disaster Recovery):

  Incremental backups are performed Sunday through Thursday, and full backups are performed every Friday.

- Security (physical, administrative, and systems):

  Physical access is restricted to required personnel, and NASIRC bulletins are received, reviewed, and applied where applicable.

- Help Desk Services:

  ODIN provides 24 x 7 helpdesk support. All problems are tracked in the ODIN Remedy system. Tier 1 calls are handled by the ODIN consolidated Help Desk in Madison, Alabama; however, unsolvable issues are reassigned to local centers.

- Software and Hardware Configuration Management:

  Software and Hardware configurations are maintained in the IT Security Plan.

- Capacity Planning:

As new requirements, growth, and technology advancement are introduced current capacity is reviewed and future needs are determined.

12.3.9 To Be Condition

SDC

A Storage Area Network and StorageTek L700 Robotic tape library project is to be completed in the near future. A server consolidation plan is being revisited to reduce the cost of maintenance and overhead.

SSC is developing a Network Monitoring Center (NMC). The NMC is a single facility that provides the ability to monitor effectively all network traffic, assess overall network health, and troubleshoot existing and future network problems. The facility, co-located with the SDC in Building 1110, houses a total of seven servers running a combination of Microsoft Windows and UNIX based operating systems. The servers host a variety of software applications, which offer unique views into all aspects of the network. A Keyboard Video Mouse (KVM) solution provides secure access to the servers for both local and remote users.

Upgrades to all servers to Windows 2000 (W2K) and installation of an Active Directory are planned.

ODIN

Upgrades to all servers to W2K and installation of an Active Directory are planned for ODIN as well.

12.4 Communications Segment

12.4.1 Wide Area Network Component

Wide Area Network (WAN) at SSC is available through access to the following:
-Commercial WAN
-Federal Telecommunications Service (FTS)
-NASA Integrated Services Network (NISN) WAN
-Defense Systems Network (DSN)

<u>Commercial WAN</u>

The Commercial WAN provided by the Regional Bell Operating Company (RBOC) provides Interexchange carrier access (IXC) to AT&T. This access is primarily used to handle all commercial local incoming and outgoing traffic for the Center and long haul traffic not provided by FTS or other WAN's.

FTS WAN

The FTS WAN obtained from General Services Administration (GSA) FTS 2001 contract and the MCI carrier is the Center's WAN used primarily for domestic and international voice traffic, SSC Video Teleconferencing System (ViTS) room and other video teleconference systems used by Department of Defense (DoD). NASA FTS services are managed at Marshall Space Flight Center (MSFC).

NISN WAN

NISN WAN provides for the transport and delivery of NASA WAN communications services both domestically and internationally for the SSC. The NISN provides both digital and analog services, dedicated and switched circuits, packet data transport, multi-protocol WAN, domain name servers, and various data networks. Voice, video, and facsimile (Fax) are also covered in the Voice Component.

DSN WAN

DSN WAN access is provided by a Primary Rate Interface (PRI) connection between SSC, terminated in the SSC PABX (Public Access Branch Exchange) and the Navy base at Gulfport, Mississippi. This service is funded by DoD and restricted to SSC DoD users.

12.4.2 As Is Condition

Commercial WAN

Adequate capacity is available to support offered traffic with some extra capacity included to support alternate carrier backup in event of FTS/MCI failure. Five (5) two-way PRI's between the SSC Demarcation and Bell South Wire Center provide access to the commercial cloud. Cost for these PRI trunks are shared by all agencies located at SSC and liquated on a monthly basis.

FTS WAN

Capacity is adequate to support current offered traffic at this time. Four (4) two-way PRI's between the NISN Gateway Demarcation and the SSC PABX provide access the FTS cloud. Cost for these PRI trunks are shared by all agencies located at SSC and liquated on a monthly basis.

NISN WAN

A DS-3 circuit that terminates into a Cisco 8600 BPX switch at SSC supports the Stennis connection to the WAN. Connected to the switch is a Cisco 8220 MGX concentrator to allow transfer of constant bit rate (CBR). Coming off of the BPX are the ATM connections to the Stennis Premium Service (PIP) and Standard Service (SIP) routers. Traffic between the routers is load balanced allowing both routers access into the DS-3 circuit. The Internet Protocol (IP)

connection between the Stennis and Wide area border switches is supported by a 100Mbit Fast Ethernet connection.

DSN WAN

DSN WAN services are totally managed and funded by DoD and only terminate in the SSC PointSpan switch over a PRI to provide DoD personnel access to the WAN.

- **Systems Description and Operational Concept**

NISN WAN

A DS-3 circuit that terminates into a Cisco 8600 BPX switch at Stennis supports the Stennis connection to the WAN. Connected to the switch is a Cisco 8220 MGX concentrator to allow transfer of CBR (constant bit rate) traffic. Also coming off of the BPX are the ATM connections to the Stennis PIP and SIP routers. Traffic between the routers is load balanced allowing both routers access into the DS-3 circuit. The IP connection between the Stennis and Wide area border switches is supported by a 100Mbit Fast Ethernet connection.

- Premium Service (PIP):

  This service provides a premium level of data networking connectivity using the IP suite. PIP service is differentiated from SIP service in that it provides a higher performance level, higher priority for problem resolution, and is not directly connected to the general Internet. PIP connectivity to the general Internet is through a controlled gateway and is implemented on an exception basis only.

  PIP service is most appropriate for internal SSC networking requirements where the SSC operations should be isolated from the general Internet.

- Standard Service (SIP):

  This service provides for basic data networking connectivity using the IP suite. SIP service is the commodity Internet service that provides the SSC link to the Internet in general. It provides basic universal Internet connectivity with minimal performance guarantees or restrictions on acceptable use.

  SIP service is open to the public to enable access to publicly available NASA information sources such as World Wide Web services.

OTHERS

Commercial WAN, FTS WAN, and DSN WAN are not managed at SSC.

12.4.3 Production Network Diagram

Figure 66: NISN WAN

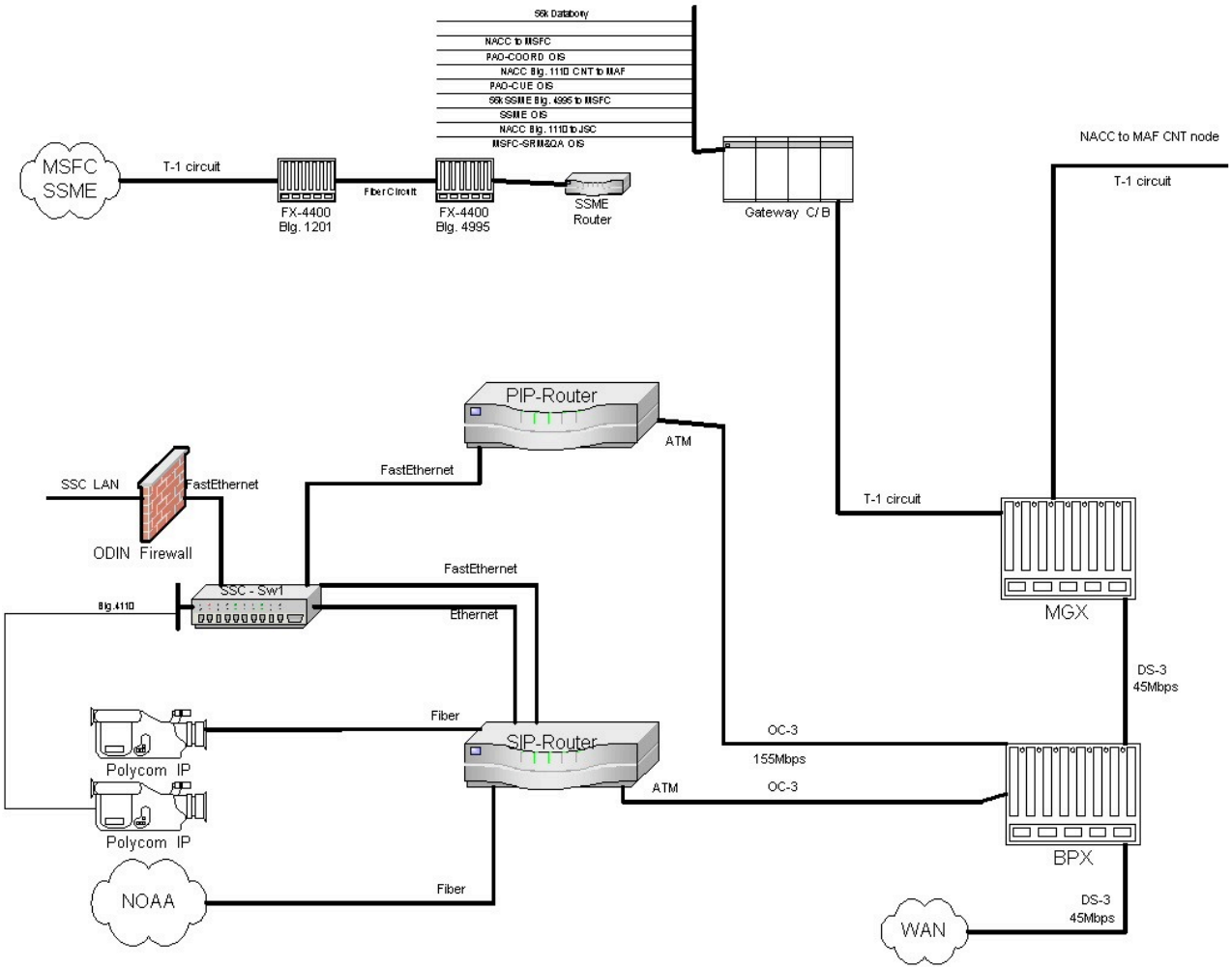

12.4.4 Systems and Support

Commercial WAN

Bell South negotiated a memorandum of understanding (MOU) with SSC whereby SSC provides floor space and utilities for the Bell South space. This office is maintained from the Bell South remote diagnostics center and personnel dispatched as required.

FTS WAN

FTS services are provided by four (4) two-way PRI circuits connected to the Center PABX. Access to FTS trunks are granted or denied based upon the User Group access defined in the PABX for each individual number. Local support for services is provided by ODIN contractor.

NISN WAN

NISN negotiated a memorandum of understanding (MOU) with SSC whereby SSC provides floor space and utilities for the WAN gateway equipment. Included in the MOU are other supports for personnel maintaining the WAN gateway equipment and end-user equipment provided by NISN. Also, support is required for a NISN Customer Service Representative.

NISN provides a 24-hour Help Desk for assistance on all NISN provided services. NISN and the SSC ODIN Help Desk have coordinated procedures for interfacing on user and system problems.

DSN WAN

DSN local support is provided through the ODIN contractor.

12.4.5 Facilities

Commercial WAN

Space in SSC Building 1201 is leased to Bell South to house their remote 5ESS switch, battery bank, and associated equipment. The demarcation point for Bell South is also located in Building 1201.

FTS WAN

Not Applicable.

NISN WAN

Space in SSC Building 1201 houses WAN gateway equipment, and SSC Building 4995 is for a remote gateway servicing the Propulsion Test complex. There is also rack or equipment space at most NISN WAN user locations. Office space is provided by SSC for NISN personnel. Utilities are provided, including UPS backup for both gateway locations.

DSN WAN

Facilities are not required to support the DSN services. This circuit from Bell South is terminated at the SSC demarcation and routed through smart jack to the center switch.

12.4.6 Technology Flashpoints

SSC currently identifies a technical flashpoint in the inadequacy throughput due to latency in networks:
Moderate Resolution Imaging Spectroradiometer (MODIS) data to support program
File transfer to Naval Research Laboratory (NRL) Gigabit files in less than 15 minutes

SSC is expecting future technical flashpoints regarding Video over IP (VOIP) and One NASA Initiative due to the concern for adequate future bandwidths.

12.4.7 To Be Condition

Commercial WAN

No changes anticipated. Annual traffic capacity study dictates increases/decreases.

FTS WAN

Orders for two (2) dedicated PRI's have been placed by NISN to FTS for support of new Video teleconferencing units that are expected to be installed by end of Fiscal Year 2003 (FY03).

NISN WAN

The new NASA Unites contract is due in December 2003, and modifications are expected. The NASA WAN will undergo significant changes in configuration, performance, and cost efficiency as a direct result in the new contractor taking advantage of latest technology.

DSN WAN

DSN WAN to be completely funded by DoD agency at SSC.

12.5 Local Area Network Component

SSC is a Federal City comprised of several different Network Customer Communities – both Government (Resident Agencies) and Non-Government (Educational and Commercial Research Companies). External network connections vary between Network Communities.

SSC NASA Network provides connectivity for a few Resident Agencies, NASA contractors, and SSC NASA systems and clients. NASA Wide Area Services are provided by NISN (NASA Integrated Services Network) http://www.nisn.nasa.gov/. Bell South provides the fiber optic pathways leaving the Center. ODIN (Outsourcing Desktop Initiative for NASA) provides last mile fiber optic pathway to SSC Customer location http://www.odin.nasa.gov.

Direct Network Community to Network Community connectivity is not available due to constraints with specific Network Community Policies and Procedures.

12.5.1 As Is Condition

SSC Network

The infrastructure is owned by NASA and managed completely by the Center Operations Directorate at SSC. It is operated only by the ODIN contractor. The IP range is owned and controlled by NASA, and the domain name associated with the IP range is ssc.nasa.gov.

SSC Infrastructure Components

SSC Infrastructure Components include Routers, Firewalls, Switches, Domain Name Systems (DNS), IP address space, Institutional Windows Domain Controllers, Institutional Email systems, Network attached appliances, and Remote Access Systems. The Network attached appliances include Email Virus Appliances, Web Content Filtering Appliances, and Time Server. Dial-In, Virtual Private Network (VPN), and Instant Virtual Extranet are components of Remote Access Servers.

Network Switches

Network switches include the following:
45 10/100 Mbps (Megabits per second) switches with either Oc3, Oc12 or 1 Gbps (Gigabits per second) uplinks
36 10 Mbps switches with Oc3 uplinks
12 ATM (Asynchronous Transfer Mode) backbone switches with partially meshed Oc3 and Oc12 connections

Wiring (Copper and Fiber)

Wiring at SSC is divided into Category 3 wiring (70%), Category 5 wiring (25%), and Category 6 wiring (4%). The remainder 1% is 62.5-micron multimode fiber.

12.5.2 Systems Description and Operational Concept

The SSC Network provides the “last mile” connectivity for users in the “nasa.gov” domain space located at SSC.

12.5.3 Production Network Diagram

A detailed network diagram is available upon request, but is considered sensitive in nature and is not included.

The following two diagrams represent typical images:

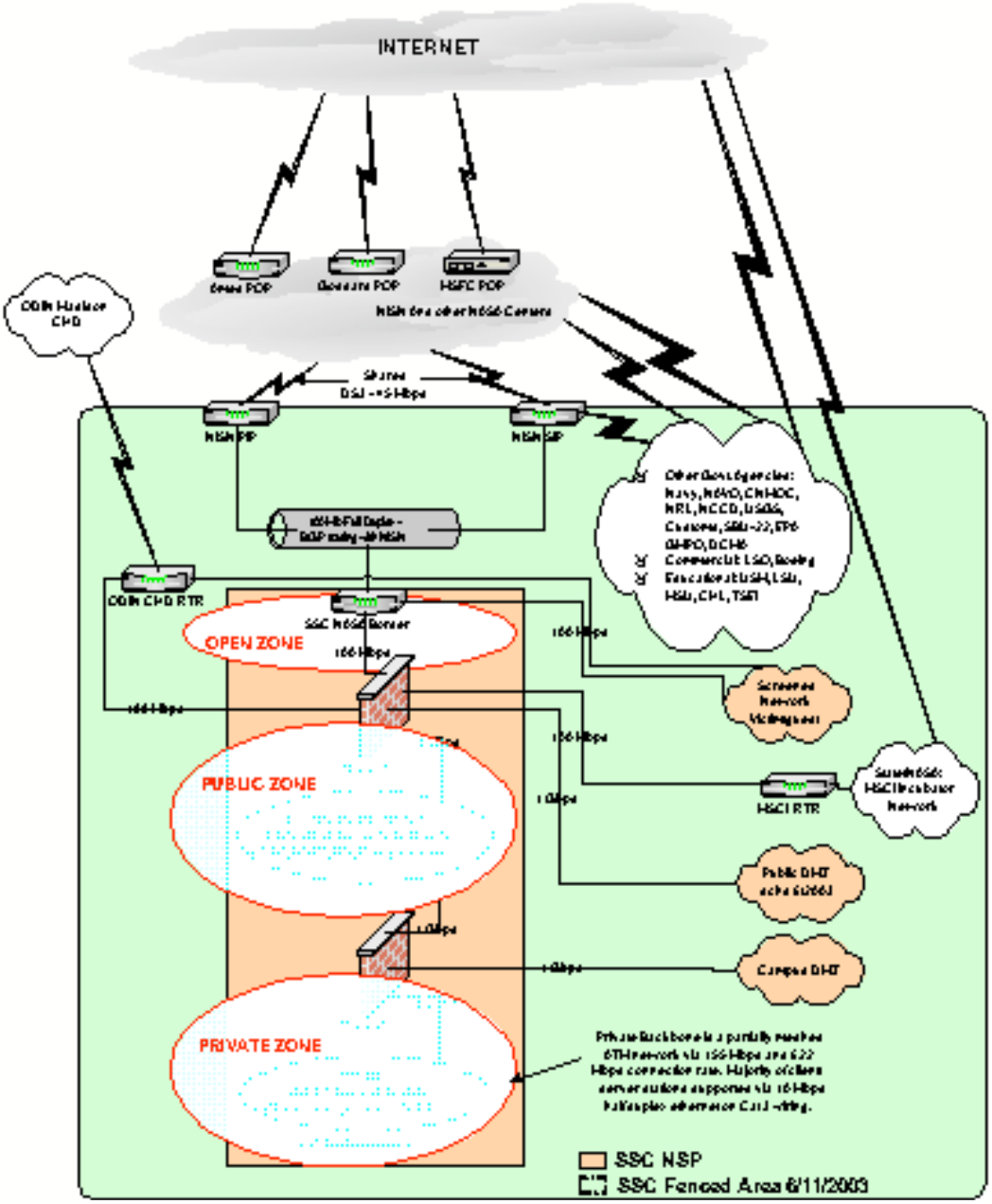
INTERNET
OPEN ZONE
PUBLIC ZONE
PRIVATE ZONE
SSC NSP
SSC Fenced Area 6/11/2003

Figure 71

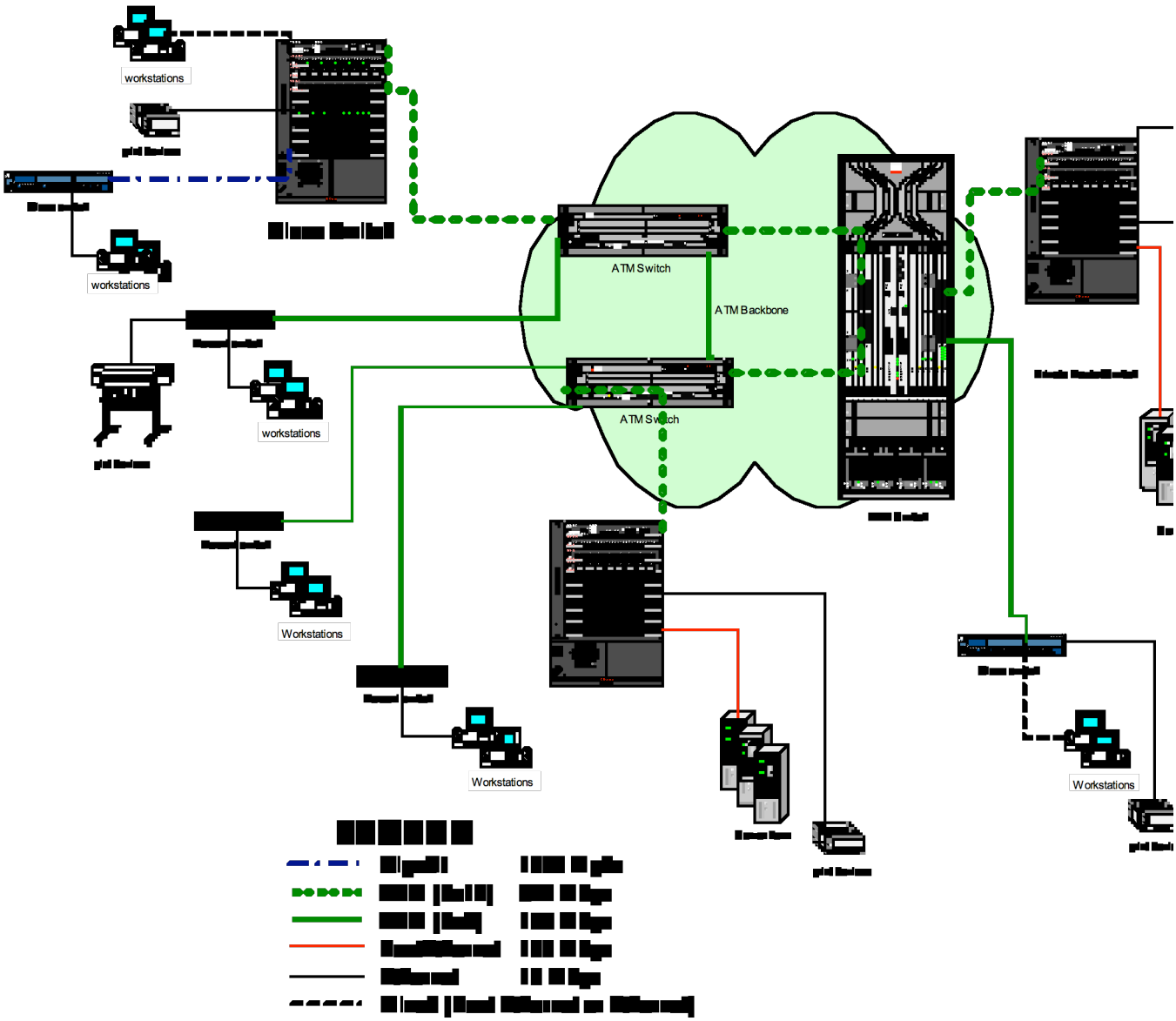
workstations
workstations
workstations
Workstations
Workstations
Workstations
ATM Switch
ATM Backbone
ATM Switch

12.5.4 Systems and Support

LAN provides connectivity to all network attached devices such as desktop computers, servers, server farms, printers, cameras, physical access control systems, etc.

12.5.5 Facilities

Cable Plant

Cable Plant – Services Networks, Telephony, Security, Fire, Energy Management Control System (EMCS), Closed Circuit Television (CCTV), and Video Distribution throughout the SSC

- Cabling Duct Bank
  - Star configuration originating from Communications Building
  - Single-mode and Multi-mode fiber and Copper
- Direct burial cabling
- Over head cabling
- Network Coverage
  - 49 buildings
  - 90+ network switches/hubs
  - 4000 network end connections

12.5.6 Technology Flashpoints

<u>Contract Issue</u>

The fixed cost model used in the ODIN contract is detrimental to operation and maintenance of the SSC LAN. ODIN is responsible for operations of the LAN. The fixed cost model minimizes any incentive that the contractor might have to perform upgrades and preventive maintenance on the network. Contractually there are no ODIN reportable metrics on the network that could be used as incentives of contractor performance. With employee dependences on email and web services, the network is critical to daily operations of the Center. SSC is concerned that a catastrophic network failure might occur as a result of the lack of attention to maintenance of the network infrastructure.

<u>Technology</u>

The legacy switches are based on older, non-upgradeable hardware architecture. The devices cannot be upgraded for performance past 10 Mbps. The manufacturer has stated that the devices will no longer have technical support within 2 years. The current cost to maintain hardware and software support has become cost prohibitive.

The network backbone switches are also nearing the EOL (end of life) and are experiencing performance issues. The current ATM architecture cannot be enhanced to accommodate additional bandwidth without replacing all the equipment in question. The replacement would be cost prohibitive when compared to costs for 10 Gbps architecture.

The wiring is aging and is non-compliant with IEEE 802.3 (Institute of Electrical and Electronics Engineers) specifications for high-speed wiring (speeds at 100 Mbps or higher) and the installation is not compliant with EIA/TIA 568 (Electronic Industries Alliance / Telecommunications Industry Association) standards. The physical sheathing on much of the copper cabling has become brittle. The majority of the copper cabling at SSC is currently at Category 3 standards (70%). While the remaining cabling, which is at a Category 5 standards, approximately 25% of this wiring is not rated for speeds greater than 100 Mbps.

Security

The legacy switches are not compliant with NPG 2810.1 and other Industry standards concerning secure management practices. Code updates for all the legacy switches to correct this vulnerability are not, nor will it ever be, available.

Resources

With the ever-expanding need for more bandwidth, the SSC cable plant is in dire need of additional single mode fiber optic cable and Category 6 copper cabling. Additional cabling is required to support connectivity for both the backbone and the desktop connections with speeds at and greater than 1 Gbps.

Reliability

The current network has many single points of failure. Little to no redundancy has been built in to the current architecture because of funding restrictions. Many of the legacy switches no longer have on-site spares to accommodate field replacements simply because spares are no longer available.

12.5.7 Compliance

All new equipment at SSC is in compliance with NPG 2810.1, Security of Information Technology, specifically the guidelines for Firewalls, requirements for a Trusted Host, and the Perimeter Firewall Rule Set (established by Trust Model Group subgroup from IT Security Managers Group). The NPG 2810.1 compliance is applicable since all the legacy equipment is covered by security waivers.

12.5.8 Capabilities

SSC's Desktop Speed and Backbone Speed are charted below:

Desktop Speed

- 70% Switched 10 half Mbps
- 27% Switched 100 Full Mbps (depends on wiring in area)
- 2 % Switched 1 Gbps
- 1% ATM Oc3 155 Mbps

Backbone Speed
- 80% Oc3 155 Mbps edge-to- backbone connections
- 15% Oc12 622 Mbps edge-to-backbone backbone connections
- 5% 1 Gbps edge-to-backbone connection
- 60% Oc3 155 Mbps backbone-to-backbone connection
- 30% Oc12 622 Mbps backbone-to-backbone connection
- 10% 1 Gbps backbone-to-backbone connection

12.5.9 To Be Condition

SSC is planning to undergo a number of changes and updates. The center will migrate from ATM Backbone to Gigabit/10 Gigabit backbone, and there will be a deployment of 10 Gbps backbone with activation of newer Network Buildings.

Other future conditions include, but are not limited to, the following:
-A cross realm authentication with other centers, additional tokens, and/or token replacement
-A deployment of denied based position at perimeter firewall on outbound connections originating from SSC NASA network
-VPN – A completion of activation of Cisco 3080 units
-Center outbound proxy service – where evaluations on current products are scheduled for to be performed during FY03
-Center inbound replacement for Agency Secure Nomadic Access (SNA) – where product was selected and evaluated and replacement is now dependent on Center funding

12.6 Voice Component

SSC is a multidisciplinary center for federal, state, academic, and private organizations engaged in space, oceanic, and environment programs and the national defense. More than 4,600 people and 30 agencies are located at SSC.

NASA as the host agency at SSC, is responsible for providing IT services to the various agencies. Exceptions to this would be agencies that have special requirements that necessitate the particular agency maintaining their own network environment.

Outside cable plant (OSCP) and inside cable plant (ISCP) ownership remains with NASA and is both managed and maintained under the ODIN contract.

A Bell South wire center is located at SSC in the Communications Building to support requirements for SSC, the Mississippi Army Ammo Plant, and construction contractors located on the Center.

SSC is served by an EADS North American, Inc. (EADS), PointSpan 6880 PABX switch upgraded from an Intecom IBX S80+ switch in July 2002. Ownership remains with NASA and is managed and operated under the ODIN contract. This switch serves all agencies at SSC under a reimbursable agreement with the various agencies and contractors located at the center. The Technical Services Contractor (TSC) is responsible for all cost sorting and reimbursable reporting into the NASA Financial Management System. The EADS PointSpan system can migrate to VOIP in increments as funding and requirements dictate.
SSC is served by an Octel 300 Serenade voice mail system. Ownership remains with NASA and the system is managed and operated under the ODIN contract. This system provides voice mail services for all agencies and contractors at SSC. Cost of voice mail services is included as part of the ODIN phone seat cost.

12.6.1 As Is Condition

OSCP

OSCP is primarily single mode fiber (SM) and Multi-Mode fiber (MM) with some coaxial and legacy copper.

ISCP

NASA and NASA contractor ISCP is primarily Cat3 legacy and some Cat5 wiring. Efforts are underway to upgrade ISCP to Cat6 as requirements dictate and funding becomes available.

UMC (Universal Modular Chassis, Digital)

The Stennis Data Network is a combination of copper and fiber cable distributed either directly to terminal equipment or indirectly via the UMC equipment network.

The UMC is capable of providing from 2400bps up to and including PRI [Integrated Services Digital Network (ISDN)] dedicated data transport, digital and analog data. The UMC has full management capabilities for monitoring and testing. An array of data cards are available depending on requirements, speed, type of data, and protocol. Expansion is easily accomplished by strategically adding additional chassis' to the dedicated data network. The UMC allows for the channelization of primary data links, i.e. T1, PRI, etc., to its lowest signal level to serve voice and data if required. Various interfaces are also available for terminal equipment connectivity.

PABX

Switch upgrade from Intecom IBXS80+ to EADS PointSpan 6880 Switch (currently Rev 2.0.Z) was completed in July 2002. The PointSpan 6880 provides a migration path for Converged

Networks [Telecommunications over IP (TOIP) & VOIP] and allows implementation of IP telephony at the center's own pace, as requirement dictates and funding becomes available. It successfully bridges the gap between circuit switched and packet-switched telephony, enabling the center to use existing data network for IP telephony and leverage the power of IP telephony to meet business objectives, with the flexibility to expand to 100% IP when and where requirements dictate. This PABX provides local trunk connectivity to Commercial Regional Bell Operating Company (RBOC) and Interexchange Carrier (IXC), Federal Telecommunications System (FTS), and Defense System Network (DSN). Long distance and international calls are routed through FTS. Calling Cards are provided through FTS. The Enterprise Control Server (ECS) for the PABX is located in Building 1201. Critical equipment in this Building is supported with UPS and a backup generator.

TABLE 29

ACTIVE PABX TYPES	QUANTITY
PORTS	6,500
NODES	20
TRUNKS	501

VOICE MAIL

Octel 300 Serenade platform voice mail switch, integrated with the PointSpan switch, provides voice mail and Single Digit Menu (SDM) application services to the Center. This voice mail system was upgraded to the Octel platform in the early to mid 90's. It is anticipated that this system will become obsolete within the next three to five years and will not support the technology needed to migrate to unified-messaging that is in initial stages of being investigated. Maintenance and operation of this system is under the ODIN contract with NASA retaining ownership of the system, and 4,527 voice mailbox's are in service at this time.

FACSIMILE SERVICES

NASA and NASA contractors utilized facsimile equipment provided through NISN. This facsimile equipment has been transitioned to the center with NISN providing maintenance through the end of FY03. The Center plans to utilize the existing facsimile equipment and extend maintenance with Pitney Bowes for those machines that can be placed on maintenance contract. Facsimile machines have been consolidated where possible, and copy machines have been upgraded for scan/print/fax capability in selected areas. A number of facsimile machines have been placed in spares and will be used to replace machines in the field that are not covered under maintenance when trouble is reported. This is an interim solution, until decision on unified messaging can be made, funding obtained, and/or NASA wide solution implemented.

Facsimile services are also available from the ODIN contractor, but no ODIN FAX seats are currently being used.

TELEPHONES

Telephones are provided under the ODIN contract. Trunks to the local RBOC for local dial-tone are provided by NASA outside of the ODIN contract. In addition, NASA leases approximately twenty-five (25) ESSEX lines from the RBOC. The ESSEX lines are placed at various shelter locations to be used in event of emergency (hurricane) and backup if the PABX fails. ESSEX services are not a part of the ODIN contract.

RADIOS

NASA retains ownership of the seven (7) channel Motorola Trunked Radio System and 400' Tower. ODIN provides management and operations (M&O) of this system. Individual radio units are provided as appropriate by NASA, the Resident Agencies, and the ODIN contractor.

Approximately 600 personnel utilize this system with ability to talk on 90 talk groups.

The trunked radio system is capable of switching communications among different radio networks and the phone system. A significant number of the radios are required to be "intrinsically safe" for use at rocket engine test stands. More than 100 of the radios are considered critical to elements of center and program operations. SSC began its transition to the new required narrow band frequency spectrum in FY03.

CELL PHONES

Cell Phones are currently obtained via Material Request (MR) submitted to the purchasing Facilities Operating Services Contractor (FOSC). Invoices are submitted to cell phone user and Supervisor for verification that calls were placed for only official business. Eighty-three (83) cell phones are currently issued. NASA is currently in the process of evaluation of new wireless contract for the Center to use for cell phone services.

CALLING CARDS AND 800 TOLL FREE SERVICE

Calling Cards and 800 Toll Free Services are obtained through FTS. The exception is one 800 toll free number for a resident agency that is provided through the commercial carrier (AT&T).

VOICE TELECONFERENCING SERVICES (VoTS)

Voice Teleconferencing Services are currently being provided by NISN.

VOICE OVER IP (VOIP)

Three (3) VOIP systems are interfaced to the center's PABX. All three of these VOIP systems are owned and maintained by the DoD agencies that reside at the center. One system supports the NAVY Seals, one supports the NAVY ship/shore – shore/ship, and one supports the Navy bunkers. PRI trunks are connected to the center PABX to provide access to the FTS, DSN, and commercial trunks.

NASA is in the process of setting up a field trial of the PointSpan VOIP product.

SATELLITE PHONES

Not Applicable.

PUBLIC ADDRESS (PA)

The remnants of a former Stennis-wide Public Address (PA) system still exist in several buildings; however, there is no current plan to reestablish this system. Individual Announcement systems, which are originally part of the site-wide system, still exist and are in use in several buildings.

12.6.2 Systems and Support

Systems include the PointSpan PABX, Octel Voice Mail system, cable vault, and UPS. A Caterpillar, (diesel) 300KW with 480volt output capacity provides backup power for the systems. The demarcation for the RBOC is also located in Building 1201. The PABX and Voice mail system are supported through the ODIN contract.

A locally developed NASA Web Application (OWEB) provides a method for personnel to order ODIN seats and responsible functional area to separate and process billing for the agencies located at the center. A second application (CBS) is in production to separate and process billing for Non ODIN configuration billing. Both applications were developed and are maintained by the TSC contractor.

Local telephone service is provided to the FTS 2001 Contractor supporting the Pager service.

12.6.3 Facilities

Building 1201 (Communications Building) provides facilities space for the ODIN contractor, the PABX, and Octel Voice Mail System; this building is restricted to keycard access.

Communication Node locations are established at strategic buildings to extend these services to all locations at the Center. A backup generator is located at Building 1201, and the power supply is installed with the PABX equipment at the various node locations. Facility space for the NISN Gateway is also located in Building 1201.

Building 1201T provides facility space for the TSC administrative interface support group.

12.6.4 Technology Flashpoints

SSC's current technology flashpoints are listed, but not limited to, the following:

-PointSpan PABX – evaluation and required upgrades of LAN infrastructure needed to support transition to VOIP
-Implementation of new E911 system to replace current 911 system
-Octel Voice Mail System – probability of end of life announcement will require upgrade or redirection to unified messaging
-Product needed to synchronize the numerous databases

12.6.5 Compliance

All voice systems comply with industry standards (including availability and non-blocking) as well as with Federal Regulations of the Privacy Act.

12.6.6 Capabilities

PointSpan 6880

PointSpan is the leading solution for companies with multiple locations and high volumes of voice traffic. It has a unique single platform design, scalability, unequaled reliability, and disaster tolerance.

- ***Converged Networks, TOIP & VOIP:***

  PointSpan is the voice platform that allows implementation of IP telephony at a unique pace. It bridges the gap between circuit-switched and packet-switched telephony, enabling use of existing data network for IP telephony and allowing the power of IP telephony to meet business objectives, with the flexibility to expand to 100% IP. With its embedded Automatic Call Distribution (ACD) functionality and flexible distribution options, PointSpan enables the option to run a call center or enterprise campuses in a consolidated fashion, whether a single site or multiple sites throughout the country.

- Single Platform Design:

  PointSpan's unique single platform design can distribute applications to multiple sites, avoiding the need to duplicate add-on applications and upgrades. Consolidated management and administration mean lower capital expenditures and lifecycle costs. PointSpan provides event-driven operations data and reports for effective system and business management as well as unifies the enterprise and easily adapts with both growth and change.

  PointSpan's scalability gives the enterprise power to make the infrastructure adapt to business direction—vice versa.

  Distinctive Characteristics:

- Up to 45,000 ports per system
- 8,000 agents per unit
- 1.5 million busy hour call completions
- Scalable platform
- Distributed network solution
- Solid migration strategy to IP telephony
- Enhanced access to operational and management knowledge (real time reports)

12.6.7 To Be Condition

PUBLIC ADDRESS SYSTEM (PA):_A new PA system is planned for the new Propulsion Test Directorate (PTD) facility.

12.7 Video Component

Video Teleconference

The current SSC Video Teleconference equipment that is provided through the NASA Integrated Services Network (NISN) consists of one full service ViTS room and three (3) Low Bandwidth Video (LBV) systems using switched 56 Kbps (Kilobits per second) connections through the NISN WAN. The remaining LBV unit is anticipated to be excess or returned to NISN.

Video Production

The services provided by the video production department include video acquisition, pre-production, postproduction, video archiving, captioning, and streaming video content creation.

Video Distribution

The SSC Video System is similar to a 21 channel commercial CATV system. Local weather radar, local and national television, NASA Select and other Stennis specific channels are distributed throughout the SSC campus.

Audiovisual Services

Audio Visual Services include the following:
Conference Room Audio Video Design, Installation, and Maintenance
Special Events, including PA and Presentation Systems
Conference Room and Auditorium Operations Support

Conference Room Operations Support includes technical support on Projectors, Projector Screens, Computers, Computer Monitors, Overhead Projectors (Elmo), Microphones,

Televisions, DVDs/VCRs, Lecterns, Wireless Keyboards each with a Mouse, System Control Touch pads, Remotes, Interactive White Boards, and Conference Telephones in the conference rooms.

12.7.1 As Is Condition

Video Teleconference

LBV:

LBV equipment is provided and maintained by NISN; however, these units are considered obsolete.

ViTS:

Primary ViTS:
The ViTS room equipment is provided and maintained by NISN. Connectivity is through a Primary Rate Interface (PRI) provided by the FTS contract.

Secondary ViTS:
SSC also has one video teleconference unit that was originally installed to support Collaborative Engineering Environment (CEE). However, the CEE equipment is not supported or maintained by NISN and is currently being utilized as a secondary ViTS room.

Video Production

The video production department is currently in transition from analog to standard-definition digital video as required by the NASA Digital Television Transition Plan. Most of the transition has been in production and post-production. SSC has capability to perform video acquisition, editing, and creation of the final product in digital format as well as analog.

Video Distribution

The SSC Video System is similar to a 21 channel commercial analog CATV system available on the SSC Campus. The system uses coax cable to nearby buildings and FM analog fiber optics for outlaying buildings. The system is approximately 11 years old. Over the years, channels have been added, but no significant upgrades have been performed.

Audiovisual Services

Operational services are provided for approximately 20 conference rooms; several of these are in the process of being upgraded with newer technology. Along with standard upgrades, SSC is expanding with an additional six conference rooms being added.

Refer to below diagram for an "as is" image:

Figure 67, Basic Conference Room

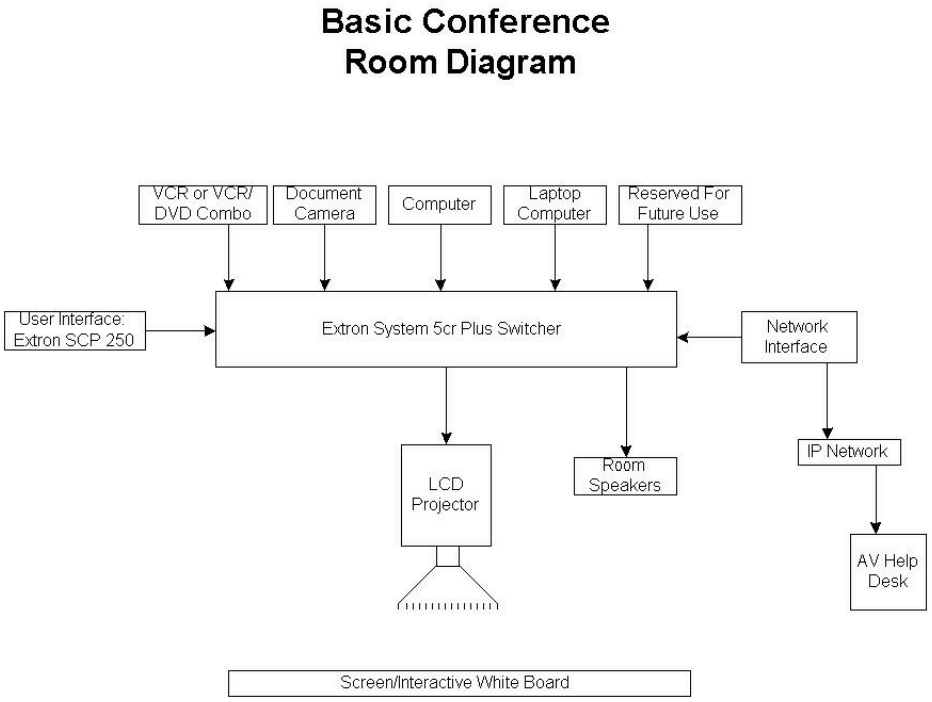

12.7.2 Systems Description and Operational Concept

<u>Video Teleconference</u>

NASA Center Director VTC/Tandberg Desktop Appliance:

The Tandberg Desktop Appliance is an IP-based unit capable of supporting point-to-point and multipoint (VTC operator assisted) videoconferences. The Tandberg will allow the Center

Director to easily establish point-to-point videoconferences with a handheld remote control. Multipoint conferencing is initiated through the NASA Video Teleconferencing Center (VTC). A Tandberg directory provides easy method to store and retrieve directory information, to add, edit, delete, and dial entries from the directory. NASA VTC provides bridge support to accommodate multipoint conferences for daily, weekly, monthly, or one-time-only conferences. Maintenance is provided through NISN.

ViTS:

The NASA ViTS is a video teleconferencing service providing interactive point-to-point and multipoint conferencing capabilities to NASA locations, selected contractor facilities, and public video conferencing services. ViTS supports point-to-point calls ranging from 128 Kbps to 1,472 Kbps and NISN Video Bridge assisted multipoint calls ranging from 128 Kbps to 768 Kbps. The ViTS services include provisioning and maintaining special video conferencing rooms, scheduling of videoconferences, and the transmission and distribution of the video and audio among the participating locations.

ViTS rooms can consist of multiple cameras, an audio conferencing system, projection screens, still-frame graphics, and an integrated room control system.

ViTS is currently based on circuit-switching technology and supports standard International Teleconferencing Union (ITU) H.320, H.263, G.722 and G.728 compression formats. ViTS can be operated at a maximum of 1,472 Kbps, point-to-point, if utilizing a Primary Rate Interface (PRI). ViTS can be operated at a maximum of 512 Kbps, point to point, if utilizing four Basic Rate Interface (BRI) circuits. The on-board Multipoint Control Unit (MCU) has the capability of connecting up to three additional 384 Kbps calls using a PRI, or three additional 128 Kbps calls using four BRI circuits. If more than four sites are required in a multipoint conference it should be scheduled using the NISN Video Bridging Service (VBS).
ViTS units also provide audio add-on capability for conferencing with voice conferencing systems. ViTS units also provide audio add-on capability for conferencing with voice conferencing systems.

ViTS documentation is available on-line to users. Maintenance on all ViTS hardware is provided by NISN per prices outlined in the Project Service Level Agreement (PSLA).

Video Roll About (VRA):

The VRA is a ViTS roll-about system designed for smaller conference rooms and office areas and can be relocated easily to different rooms that contain network drops. VRA supports point-to-point calls ranging from 128 Kbps to1472 Kbps, and NISN Video Bridge assisted multipoint calls ranging from 128 Kbps to 768 Kbps.

The VRA consists of a 50-inch Plasma screen mounted on a Roll-about cart. It is controlled by a user-friendly, hand held remote control. Optional features include a Video Cassette Recorder (VCR) and document camera with stand.

VRA is currently based on circuit-switching technology and supports standard ITU H.320, H.263, G.722 and G.728 compression formats. The VRA can be operated at a maximum of 1,472 Kbps, point to point, if connected to a PRI. The VRA can be operated at a maximum of 512 Kbps, point-to- point, if connected to four BRI circuits.

The on-board MCU has the capability of supporting up to three additional 384 Kbps calls using a PRI or three additional 128 Kbps calls using four BRI circuits. If more than four sites are required in a multipoint conference it should be scheduled using the NISN VBS. The VRA also provides audio add-on capability for conferencing with voice conferencing systems. Maintenance on all VRA hardware is provided by NISN.

Video Production

Video and audio acquisition includes both studio and on location capabilities. Video can be captured digitally on the D-9 and Mini Digital Video (DV) formats or on analog formats such as Beta-SP, S-VHS, and VHS. The D-9 format utilizes the 4:2:2 component digital processing and is upgradeable to High Definition video.

Equipment includes five digital cameras and three analog cameras and accessories. A fully equipped studio with teleprompting, blue screen, and track lighting is also available. For live productions, a portable audio mixing, video switching, and lighting system is available.

Audio capabilities include a recording booth for narration and a full assortment of wireless and wired microphones including booms, lavalieres, podium, and PZM microphone.

The production facilities include a digital/component linear editing system and two non-linear editing systems, two DVD authoring stations, DVD duplicator, VHS tape duplicator, an open/closed captioning and sub-titling system, and a streaming video production system.

The non-linear editing systems are a Cinewave/Final Cut Pro system and an Avid Express Deluxe. The Cinewave uses the Final Cut Pro software for editing. It delivers real time uncompressed video and is upgradeable to HD. Other software includes DVD Studio Pro, Boris RED and Photo Shop 7.0.

The Avid system has 2:1 capabilities and includes Boris FX and Photo Shop 7.0 graphics packages.

It is linked to a Pioneer DVD authoring system using Author Quick software.

The digital/component editing systems offers A-B roll editing capabilities through a Ecolab digital/component switcher. It is capable of doing A-B roll editing from either digital or analog inputs and can output to digital or analog tape formats. It can control up to seven machines at one time and includes Inscriber Supreme as a Character Generator (CG) and Pinnacle Genie as a DVE (Digital Video Editor). It is connected to a Pioneer DVD authoring system and a VHS tape duplicator capable of twelve copies at a time.

The department also has a stand-alone DVD/CD duplicator for multiple duplication.

Final deliverable products include digital and analog videotapes, DVDs, and CD-ROMs (both audio and video).

A videotape archive is maintained with tapes dating back to 1986.

Video Distribution

The system consists of satellite and over-the-air antennas, video head-end with various video inputs, modulators/channel processors, and a fiber-optic/coax distribution system.

Audiovisual Services
The conference rooms are designed to allow a person to present various forms of information to a group of people. To facilitate ease of customer education and use, SSC's goal is to use one basic equipment configuration for all conference rooms.

12.7.3 Production Network Diagram

Figure 68: Video Distribution

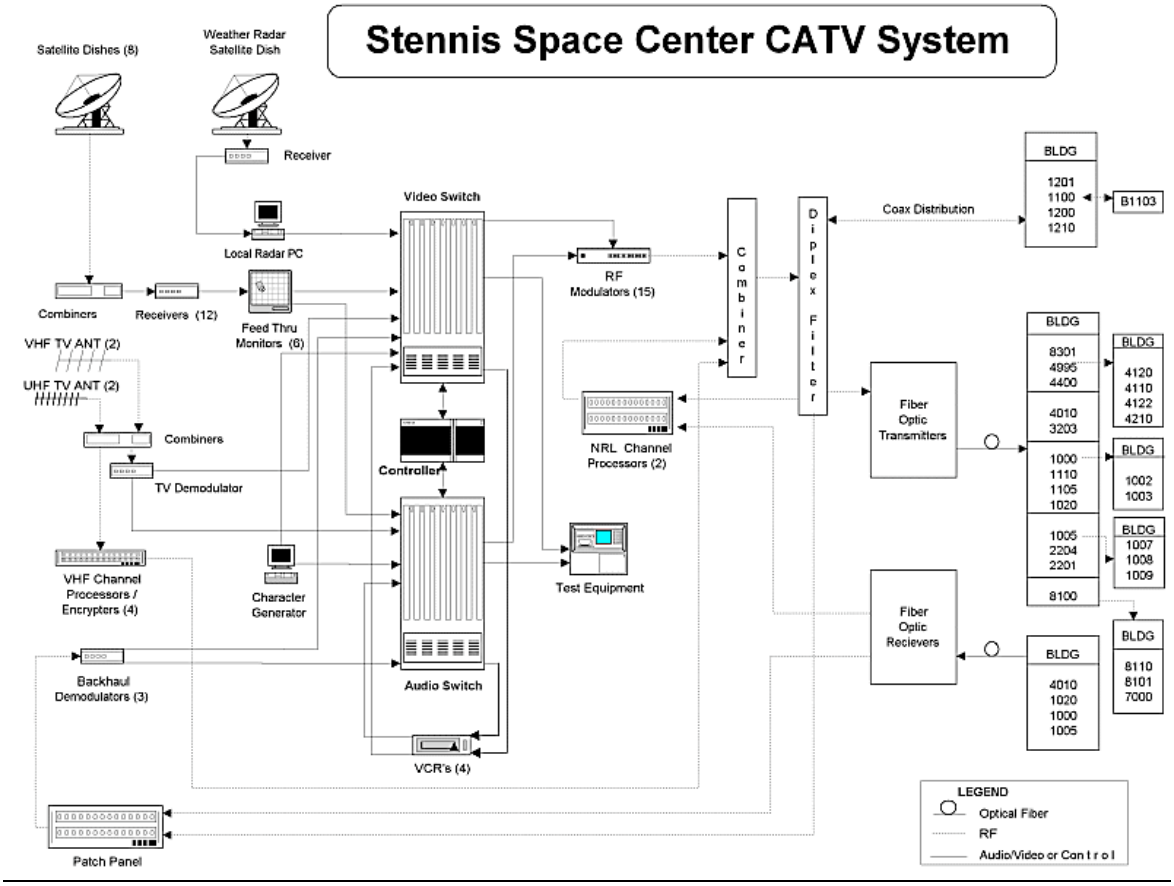

12.7.4 Systems and Support

Video Teleconference

NASA Center Director VTC/Tandberg Desktop Appliance:

The system support is a dedicated fiber from Center Director's office to the NISN Gateway where it will connect to the PIP router. Any other equipment that is required to support this appliance will be located in the NISN Gateway.

ViTS:

ViTS equipment is provided and maintained by NISN. Responsibility for the room, environment and associated facilities resides with the center. A room operator to schedule and manage the teleconferences is provided by the NASA/SSC Test and Technical Services Contractor (TTSC).

VRA:

Two VRA systems provided by NISN are not currently available, but expected to be installed prior to end of FY03. Dedicated fiber will be installed from end user location to NISN Gateway to interface with PRI circuits ordered by NISN through the FTS contractor.

Video Distribution

There are no hardware maintenance contracts. The ODIN contract provides 12/5 on site support.

Audiovisual Services

SSC has numerous conference rooms as well as an auditorium. Five A/V technicians support these rooms. The A/V technicians also support special events per NASA's request.

12.7.5 Facilities

Video Teleconference

LBV:

One LBV unit is located at Building 2425 Conference facility and maintained under normal environmental conditions. Two of the LBV are currently stored in the NISN Gateway.

ViTS:

A ViTS room is located in the main administrative Building 1100 on the second floor. The room is equipped with the same furnishings provided at most of the other centers. Environmental requirements are supported by the center's Facility Operating Services Contractor (FOSC).

VRA:

One of the incoming VRA units will be installed in a new Propulsion Test Directorate (PTD) building and one VRA unit will be installed in Building 1100 Room 239B to serve as backup to the main ViTS room. Environmental requirements will be supported by the FOSC.

Video Production

SSC Video Services is located in Building 1105 in rooms 101, 101A, 101B, A102 and B229. Facilities include video recording studio with blue-screen capability, video post-production areas, equipment storage, videotape storage, and office/customer service.

Video Distribution

The video head-end is located in B1201 room 174. A monitoring and Control Center is co-located with the Network Operations Center (NOC). Terrestrial TV antennas are located partway up a 400' tower. There are eight C-band satellite dishes, and each outlaying building has various communication closets with amplifiers/fiber receivers.

Power for both the head end and the monitoring and control center are provided from UPS systems in those respective areas.

Audiovisual Services

The conference rooms are located around SSC in multiple buildings including 1100, 1103, 1105, 1110, 1200, 1201, 1210, 2105, and 2425. All conference rooms and Auditorium have the capabilities to handle any requirements needed to give a meeting or presentation.

12.7.6 Technology Flashpoints

Video Teleconference

The alternate ViTS room houses equipment that is older and currently not under maintenance. Plans are to continue use of equipment elsewhere at the center after replacements are made.

Video Production

Presently, SSC does not have satellite uplink capabilities. This capability was a requirement for an event held at SSC during the Fall 2002. With the fact that plans for the event were very dynamic, it was difficult to ensure that leased equipment would be available at the needed time.

Video Distribution

There is currently a lack of sufficient fiber between buildings at SSC. Adequate funding is not currently available provide fiber upgrades.

12.7.7 Compliance

Video Production

Products developed are captioned for compliance with Section 508 guidelines.

Audiovisual Services

The Auditorium has a closed-caption decoder for video feeds over the projection system.

12.7.8 Capabilities

Video Production

Capabilities include video acquisition, pre–production, postproduction, video archiving, captioning, and streaming video content creation.

Video Distribution

The system is capable of broadcasting up to eight C-Band satellite programs, including programming from local and national news, NASA TV, Local Radar, and various others. At this time the system broadcasts twenty-one television channels. The system has equipment for broadcasting original programming through video back-hauls, videotapes, and satellite downlinks. The system feeds approximately 160 cable TV drops located in approximately 70 buildings.

12.7.9 To Be Condition

Video Teleconference

NISN is currently planning to include the IP and collaborative capabilities for their ViTS and VRA equipment. SSC will make the necessary modifications to support this transition.

Tandberg Desktop Appliance is scheduled to be installed in the SSC Center Director's office and two (2) VRA units are scheduled to upgrade two (2) of the existing Low Bandwidth (LBV) units.

The following capabilities also need to be included in future planning if funding permits:

- Transition to IP environment for Video teleconferencing
- Collaborative Environment

Video Production

A video production trailer for remote video acquisition is currently under construction. Delivery is expected prior to the end of FY03.

Digital Television (DTV) upgrades are planned for content management, additional digital video storage for post-production, and a digital archival storage.

As part of the Agency DTV Transition, an MPEG2 distribution system has been proposed. Each center will be provided an MPEG2 converter that will allow each center to upload over a dedicated network to a satellite uplink facility.

Video Distribution

DTV Transition – SSC intends to migrate to a digital television downlink and distribution system.

Audiovisual Services

SSC is planning to develop capability for Network Monitoring and Control of the audiovisual systems in the conference rooms from a centralized location.

Refer to below diagram.

Figure 69, Conference Room

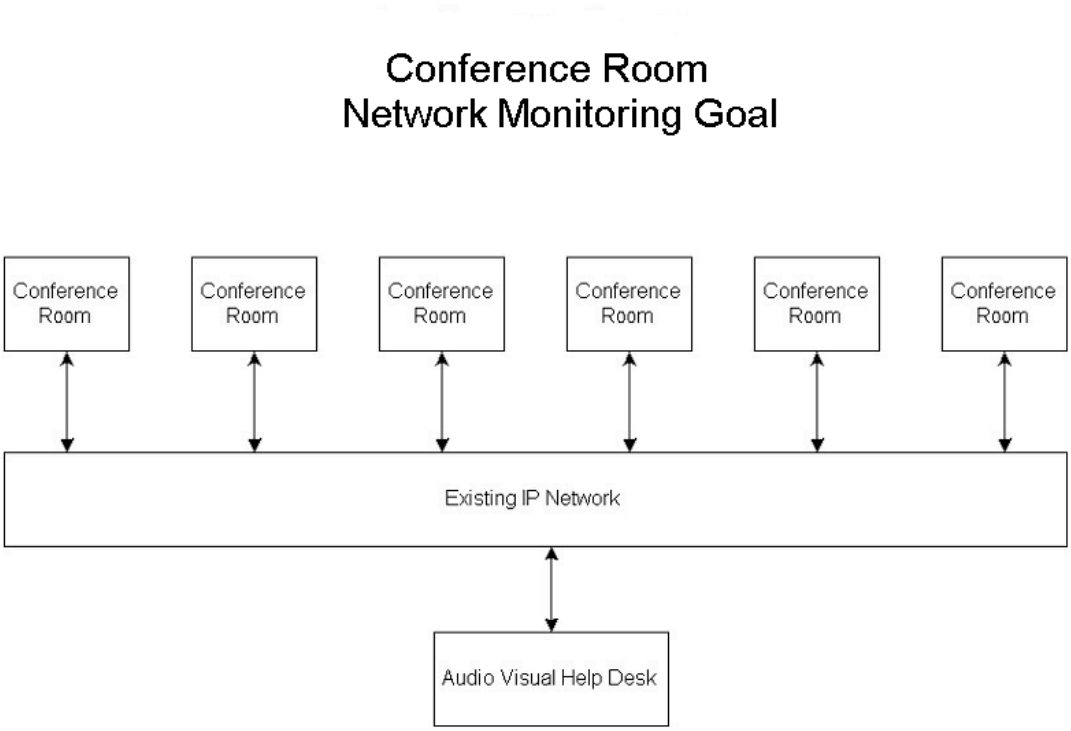

12.8 Electronic Work Environment Segment

12.8.1 Messaging and Collaboration Component

e-SPACE Collaboratory

The Stennis Office of Education's Electronic Strategic Planning and Consensus Engagement Collaboration Laboratory, or e-SPACE Collaboratory, is a combination of computer technology and facilitated meeting techniques.

The e-SPACE resource is designed to help the non-profit education community build the plans for educational improvement.

Pagers

Pagers are ordered through the FTS 2001 contract, delegated to a local Designated Agency Representative (DAR). This service is available for NASA, NASA Contractors, Resident Agencies and organizations that reside at the center and have established a funding account with NASA. Administration of this capability to include separation of cost and reporting of billing is tasked to the NASA Test and Technical Services Contractor (TTSC).

12.8.2 As Is Condition

e-SPACE Collaboratory

The e-SPACE Collaboratory is a classroom that contains 21 clients (one of these is the instructors station) and a server that is used to run the GroupSystems collaboration software.

Pagers

There are 186 Paging Units that are currently issued to NASA, NASA Contractors, and Resident Agencies who reside at the center. The FTS 2001 contractor (MCI/SkyTel) has installed transmitter equipment at a water tower on the center to improve reception for on-site personnel.

12.8.3 Systems Description and Operational Concept

e-SPACE Collaboratory

The collaborative set of electronic tools helps groups brainstorm, generate, classify, categorize, sort and prioritize new ideas, conduct surveys, and reach consensus.

The e-SPACE Collaboratory is used for educational strategic planning, team building, process redesign, group decision support, process action teams, and everyday meetings.

Pagers

Pagers are managed by the FTS contractor.

12.8.4 Systems and Support

e-SPACE Collaboratory

The e-SPACE Collaboratory is operated and maintained by the FOSC through the Office of Education. The GroupSystems software that the collaboratory uses is administered by TTSC. ODIN administers the Windows 2000 server and the twenty-one Windows 2000 Professional clients for the e-SPACE Collaboratory.

12.8.5 Facilities

e-SPACE Collaboratory

The e-Space Collaboratory is housed in the North Gate (Building 7001), in the classroom area.

Each computer, including the server, has its own UPS unit.

Pagers

NASA leases space to the FTS 2001 Pager provider for transmitter and antenna equipment. This consist facility space at the base of water tower (Building 4100) for the transmitter equipment and antenna located on the east and west side of the tower.

12.8.6 Technology Flashpoints

Although SSC tries to avoid any potential network problem and downtown, the possibility of such complications could arise and are handled accordingly at that particular time.

12.8.7 Compliance

The Messaging and Collaboration Components are in compliance with SPLN-2810-0001, SSC IT Security Plan.

12.8.8 To Be Condition

e-SPACE Collaboratory

Due to complaints from participants about the inability to read the print on the monitor that is currently being used, the SSC Education Office is purchasing a large screen to accommodate.

Pagers

No anticipated changes.

12.9 Public Web Component

The majority of public web sites are hosted on web servers located in the Stennis Data Center (SDC). Some additional web servers are located in other areas and are hosts for web sites sponsored by organizations or programs. The SDC hosts two External Public WEB Services.

12.9.1 As Is Condition

The majority of SSC's public web sites are located in the SDC. These web sites are fully available to the public at all times. They have been registered, are compliant with all policies and guidelines (including Section 508), and have appropriate IT Security measures in place.

These websites are indexed on the SSC Webmaster site, which can be accessed through the internal homepage, and this particular site provides both the URL address as well as the appropriate Responsible NASA Official for each.

Public Web Sites must be registered and will undergo a review for security clearance prior posting. The SSC Web Site Registration form (SSC-707) must be completed and submitted to initiate the process of ensuring that the site adheres to all applicable policies and guidelines.

12.9.2 Systems Description and Operational Concept

The primary SSC public web site is hosted on Linux Operating System, which resides in the SDC.

Additional organization sponsored public web sites are hosted on Windows 2000 Operating Systems and Linux Operating Systems.

The list of SSC public web sites include:

- Stennis Space Center

- SSC Emergency Operations Center (EOC)
- Rocket Propulsion Testing
- Earth Science Applications
- Remote Sensing Industry Analysis and Forecast 2000-2010
- GPS Applications Exchange
- Office of Education
- Commercial Technology Program
- SSC News Stand
- Public Affairs Information Series
- Environmental Assurance Program
- Stennis Image Retrieval System (SIRS)
- Stennis Technical Report Server (STRS)
- SSC Telephone Query
- SSC Procurement
- Freedom of Information (FOIA)
- SSC Contacts for Employment Information

12.9.3 Technology Flashpoints

Although the Public Web Sites reside in an isolated location, there remains a concern with the threat of hackers and their continuously evolving methodologies.

Stennis will stay abreast the activities relative to the One NASA portal to determine any technical issues that arise.

12.9.4 Compliance

All SSC websites, including public, campus, and internal websites and web applications, must be registered accordingly and follow applicable guidelines and policies that are in compliance with SSC and NASA standards.

Public Web Sites are in compliance with Section 508, NPG 2810.1, and SPLN-2810-0001.

12.9.5 To Be Condition

No anticipated changes.

12.9.6 References

29 U.S.C., 794d, Rehabilitation Act, Section 508.
CSOC NISN Services Document, Revision 4-C, May 30, 2003.
Electronic Industries Alliance / Telecommunications Industry Association, 568.

Information Technology Security Plan for OAO ODIN Alliance Supported Systems.
Institute of Electrical and Electronics Engineers, 802.3.
NASA ODIN contract NAS5-98144, February 2, 1998.
NASA-STD-2804, Minimum Interoperability Software Suite.
NASA-STD-2805, Minimum Hardware Configurations.
NPG 2810.1, Security of Information Technology.
SPLN-2810-0001, SSC Information Technology Security Plan.
SPLN-2810-0009, Stennis Data Center Information Technology Security Plan.
SPLN-2810-0041, ODIN Information Technology Security Plan.
SPLN-2810-0047, Stennis Data Center Disaster Recovery Plan.
http://www.eadstelecom-na.com/v_pointspan6880.htm