431-SPEC-000032
Revision -

Robotic Lunar Exploration Program

Lunar Reconnaissance Orbiter Project

Lunar Reconnaissance Orbiter Battery Performance Specification

January 10, 2005

LRO GSFC CMO

August 2, 2005

RELEASED

Goddard Space Flight Center
Greenbelt, Maryland

National Aeronautics and Space Administration

CM FOREWORD

This document is a Lunar Reconnaissance Orbiter (LRO) Project Configuration Management (CM)-controlled document. Changes to this document require prior approval of the applicable Configuration Control Board (CCB) Chairperson or designee. Proposed changes shall be submitted to the LRO CM Office (CMO), along with supportive material justifying the proposed change. Changes to this document will be made by complete revision.

Questions or comments concerning this document should be addressed to:

LRO Configuration Management Office
Mail Stop 431
Goddard Space Flight Center
Greenbelt, Maryland 20771

Signature Page

Prepared by:

Original signed by 8/2/2005
David Jung Date
LRO Battery Lead
GSFC/NASA, Code 563

Reviewed by:

Original signed by 8/2/2005
Tom Spitzer Date
LRO Power Systems Engineer
GSFC/NASA, Code 563

Approved by:

Original signed by 8/2/2005
Craig Tooley Date
LRO Project Manager
GSFC/NASA, Code 431

LUNAR RECONNAISSANCE ORBITER PROJECT

DOCUMENT CHANGE RECORD

REV LEVEL	DESCRIPTION OF CHANGE	APPROVED BY	DATE APPROVED
Rev -	Released per 431-CCR-000008	C. Tooley	8/2/2005

TABLE OF CONTENTS

Page

1.0 Scope 1-1

2.0 Documents 2-1

2.1.1 Applicable Documents 2-1
2.1.2 Reference Documents 2-1
2.2 Defintions 2-2

3.0 Requirements 3-1

3.1 Description 3-1
3.2 Component-Specific Functional/Performance Requirements 3-1
3.3 Physical Characteristics 3-1
3.3.1 Mass 3-1
3.3.2 Center of Mass 3-1
3.3.3 Envelope 3-1
3.3.4 Minimum Resonant Frequency 3-2
3.3.5 Mounting 3-5
3.3.6 External Adjustment 3-5
3.3.7 Finish 3-5
3.3.8 Identification and Marking 3-5
3.4 Electrical Characteristics 3-6
3.4.1 Inputs 3-6
3.4.2 Connectors 3-6
3.4.3 Grounding 3-8
3.4.4 Surface/Dielectric Charging Protection 3-10
3.4.5 Dielectric Strength 3-11
3.4.6 Insulation Resistance 3-11
3.4.7 EMI/EMC 3-11
3.5 Life Requirements 3-11
3.6 Environmental Requirements 3-11
3.6.1 Static Loads 3-11
3.6.2 Vibroacoustic Loads 3-11
3.6.3 Thermal 3-12
3.6.4 Vacuum 3-12
3.6.5 Radiation – Total Dose 3-13
3.6.6 Humidity 3-13
3.7 Safety Requirements 3-13

4.0 Verification Requirements 4-1

4.1 Inspection 4-1
4.1.1 Visual Inspection 4-1
4.1.2 Physical Measurement 4-1
4.1.3 Documentation Search 4-1
4.2 Analysis 4-1
4.3 Test 4-1

TABLE OF CONTENTS

Page

4.3.1 Battery Qualification Test Plan 4-1
4.3.2 Battery Acceptance Test Plan 4-3
4.4 Test Restrictions 4-4
4.4.1 Failure During Test 4-4
4.4.2 Modification of Hardware 4-4
4.4.3 Re-Test Requirements 4-4
4.5 Test Definitions and Parameters 4-4
4.5.1 Functional Tests 4-4
4.5.2 Pulse Test 4-4
4.5.3 Loads Tests 4-5
4.5.4 EMI/EMC 4-6
4.5.5 Thermal Vacuum Test 4-6
4.5.6 Capacity Tests 4-7
Appendix A. Abbreviations and Acronyms A-1

LIST OF FIGURES

Figure Page

Figure 3-1. Envelope Dimension Definition 3-2

LIST OF TABLES

Table Page

Table 3-1. LRO Mission Unique Requirement 3-2
Table 3-2. Cell and Battery Performance Specifications 3-4
Table 3-3. Component Loads 3-11
Table 3-4. Random Vibration 3-12
Table 3-5. Sine Sweep Vibration Test Levels 3-12
Table 3-6. Cell/Battery Temperature Limits 3-12
Table 3-7. Safety Performance Tests 3-13
Table 4-1. Battery Qualification Test 4-2
Table 4-2. Battery Acceptance Test 4-3

1.0 SCOPE

This specification describes the electrical, mechanical, environmental, safety, and verification testing requirements for space-qualified, Battery for a Goddard Space Flight Center (GSFC) payload, the Lunar Reconnaissance Orbiter (LRO).

2.0 DOCUMENTS

The following documents and drawings in effect on the day this specification was signed shall apply to the fabrication and to the electrical, mechanical, and environmental requirements of the Battery to the extent specified herein. In the event of conflict between this specification and any referenced document, this specification will govern, with the exception of the Battery Statement of Work for the Lunar Reconnaissance Orbiter (431-SOW-000125) in which case the SOW takes precedence.

2.1.1 Applicable Documents

431-ICD-000018	LRO Power Subsystem Electronics Electrical Interface Control Document
431-RQMT-000012	Mechanical Environments and Verification Requirements
431-RQMT-000045	Radiation Requirements for the Lunar Reconnaissance Orbiter
431-SOW-000125	Battery Statement of Work for the Lunar Reconnaissance Orbiter
431-SPEC-000008	Electrical Systems Specification
431-SPEC-000013	LRO Electrical Power Subsystem Specification

2.1.2 Reference Documents

431-HDBK-000093	LRO Component Mechanical Interface Control Drawing Guidelines Handbook
541-PG-8072.1.2	GSFC Fastener Integrity Requirements
AFSCM 91-710	Air Force Space Command Manual (AFSCM) Range Safety User Requirements Manual
AMS 2488	Anodic Treatment, Titanium and Titanium Alloys Solution PH 13 or Higher
ANSI/ASQ9001-2000	Model for Quality Assurance Design, Development, Production, Installation, and Servicing
ASTM-E595	Standard Test Method for Total Mass Loss and Collected Volatile Condensable Materials from Out-gassing in a Vacuum Environment
EEE-INST-002	Instructions for EEE Parts Selection, Screening, Qualification, and De-rating
IPC-A-600	Acceptability of Printed Boards
IPC-D-275	Design Standard for Rigid Printed Boards and Rigid Printed Board Assemblies
IPC-2223	Sectional Design Standard for Flexible Printed Boards
IPC-2222	Sectional Design Standard for Rigid Organic Printed Boards
IPC-2221	Generic Standard on Printed Board Design
IPC-6011	Generic Performance Specification for Printed Boards
IPC-6012	Qualification and Performance Specification for Rigid Printed Boards

IPC-6013	Qualification and Performance Specification for Flexible Printed Boards
MIL-C-5541	Chemical Conversion Coatings on Aluminum and Aluminum Alloys
MIL-STD-462	Measurement of Electromagnetic Interference Characteristics
MIL-STD-882	System Safety Program for Space and Missile Systems
MIL-STD-1522	Standard General Requirement for Safe Design and Operation of Pressurized Missile and Space Systems
NASA-HDBK-4002	Avoiding Problems Caused by Spacecraft On-Orbit Internal Charging
NASA-STD-8739.7	Electrostatic Discharge Control
NASA-STD-8739.3	Requirements for Soldered Electrical Connections
NASA-STD-8739.4	Requirements for Crimping Inter-connecting Cables, Harnesses, and Wiring
NASA-STD-8739.2	Workmanship Standard for Surface Mount Technology
NASA-STD-8739.1	Workmanship Standard for Staking and Conformal Coating of Printed Wiring Boards and Electronic Assemblies
S312-P-003	Procurement Specification for Rigid Printed Boards for Space Flight Applications and Other High Reliability Uses

2.2 DEFINTIONS

Throughout this document, the term “C,” or fraction of this term (e.g., C/2), will be used to describe the current for either charging or discharging a battery. The term “C” is a current numerically equal to the rated capacity in ampere-hour (Ah). Therefore, to charge a manufacturer’s cell or battery rated at 20 Ah at C/2 would be to charge the cell or battery at a current of 10 A.

“C” is also the rated capacity. This shall be the capacity, in Ah, obtained when a battery is discharged to 24.0 V, from a full state-of-charge (SOC), at a C/2 rate at 20˚C.

Depth-of-Discharge (DOD) is defined as the percentage of capacity discharged divided by the rated capacity. Therefore, a 60% DOD would be achieved by discharging 60 Ah from a battery with a rated capacity of 100 Ah.

Throughout this document, a cell lot shall be defined as the cells produced from the same batch of source materials used to build the cell plates.

Throughout this document, the LRO Lithium-Ion (Li-Ion) Battery shall be referred to as the Battery.

3.0 REQUIREMENTS

In this document, a requirement is identified by "shall," a good practice by "should", permission by "may", or "can", expectation by "will", and descriptive material by "is."

3.1 DESCRIPTION

This GSFC Specification defines the general requirements to provide the LRO Project with rechargeable Li-Ion batteries. The main purpose of this effort is to design, analyze, manufacture, inspect, test, and deliver 12 cells and four Li-Ion batteries (a Test Battery, a Qualification Battery, and two Flight Batteries) to National Astronautics and Space Administration/Goddard Space Flight Center (NASA/GSFC).

3.2 COMPONENT-SPECIFIC FUNCTIONAL/PERFORMANCE REQUIREMENTS

The Contractor shall design the cell and battery to meet the requirements in this Specification and the Battery Statement of Work for the Lunar Reconnaissance Orbiter (431-SOW-000125). The Contractor shall prepare and submit cell and battery design and performance data. The Contractor shall include mechanical drawings in accordance with the LRO mission requirements given in Table 3-1, and the battery design and performance specified in Table 3-2 and Table 3-3. The Battery shall be designed for test as a single assembly, mounted on its thermal base-plate. The Contractor shall perform analyses to demonstrate that the cells will meet the performance and life requirements specified in this document. Battery analyses shall be submitted as a part of the Battery Design Review presentation package, including the thermal analyses, structural analyses, and Failure Mode Effects Analysis (FMEA). The battery design shall be one failure tolerant, defined as one cell shorted or one cell open circuit.

3.3 PHYSICAL CHARACTERISTICS

3.3.1 Mass

Total as delivered battery weight shall be less than or equal to 40.0 kilogram (kg) and measured to an accuracy of (±0.08 kg).

3.3.2 Center of Mass

The Contractor shall define the center of mass. The center of mass shall be determined to within ±2.5 millimeters (mm) relative to an external reference.

3.3.3 Envelope

The Battery shall occupy a space of less than:

height: 27.94 centimeters (cm)
width: 27.94 cm
length: 55.88 cm

For the purposes of clarifying this requirement, the length and width dimensions define the mounting surface and the height and length dimensions define the connector face. See Figure 3-1 below:

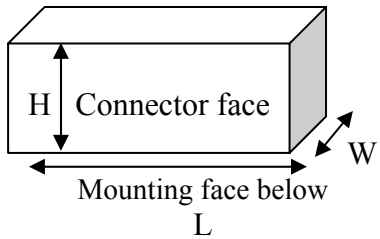

Figure 3-1. Envelope Dimension Definition

Table 3-1. LRO Mission Unique Requirement

Parameter	Requirement
Orbit	50km ±20km Lunar orbit (113 min. orbit/48 min. eclipse)
Mission Life	18 months at 30% DOD with a 60-month goal
Cycle Life	Minimum of 6,880 charge/discharge cycles corresponding to 18 months on orbit operations, and an additional 100 cycles for ground testing
Battery Operating Temperature	20±10˚C
Battery Survival Temperatures	40˚C hot case, 0˚C cold case
Capacity at 20˚C @ C/2 discharge to 24Volts (V)	Greater than 80 Ah at Beginning of Life (BOL)
Average Load Requirement for maximum eclipse of 48 minutes, at end of 18 month mission	700 Watts/Greater than or equal to 65 Ah at End of Life (EOL)
DOD after launch and early orbit operations, prior to solar array deployment (~120 minutes)	< 60% DOD
DOD Limit During Mission	< 30% DOD during nominal lunar orbit operation, and not more than 10 eclipses at 80% DOD
Minimum battery voltage at end of longest eclipse	> 26.5 V during nominal operation > 23.0 V with 1 cell failure
Maximum end-of-charge (EOC) voltage Maximum charge/discharge current	< 34.5 V C rate
Battery Height x Width x Length	27.94 x 27.94 x 55.88cm
Battery Weight, including all Platinum resistance thermometers, sensors, relays, switches, and thermal base-plate	< 40 Kg

3.3.4 Minimum Resonant Frequency

The unit shall have a minimum structural fundamental frequency of 50 Hertz (Hz) when constrained (similar to flight) at the spacecraft interface. Fixtures are considered as part of the component.

This requirement shall be verified by test during structural sine sweep testing.

3.3.5 Cell and Battery Design

3.3.5.1 Battery Type

The Contractor shall select their flight qualified Li-Ion cells and batteries that meet the requirements of this specification and Battery Statement of Work for the Lunar Reconnaissance Orbiter (431-SOW-000125).

3.3.5.2 Battery Rated Capacity at 20ºC

Contractor shall provide greater than 80Ah size of each battery based on the LRO mission requirements and the DOD, and capacity at BOL. Contractor shall provide existing test and flight data to support its compliance.

3.3.5.3 Battery Weight

The Contractor shall provide the battery weight including mass breakdown of cells and other battery components.

3.3.5.4 Battery Volume

The Contractor shall provide the battery dimensions in all directions including a description of where clearances and access are required to accommodate electrical and mechanical integration to the battery.

3.3.5.5 Battery Mounting Interface

The Contractor shall provide the battery mounting surface including the material, finish, area, pattern, smoothness, and mounting holes.

3.3.5.6 Battery Structural

The Contractor shall provide the battery structural design that meets all integrity design qualification levels for the launch environments in Section 3.6. The contractor also shall provide a profile with analysis, test data and any flight experience. The Battery must also be compatible with the LRO Component Mechanical Interface Control Drawing Guidelines Handbook (431-HDBK-000093).

3.3.5.7 Battery Thermal

The Contractor shall provide the thermal dissipation characteristics, interface temperature gradients, the treatment of battery external surfaces, interface including primer and paint (if any) and the absorptance and emmittance of the surfaces. Also, contractor shall provide compliance with analysis, test data, and flight experience.

3.3.5.8 Battery Electrical Power Interface

The Contractor shall provide the electrical interface for flight power including the type, quantity, and size of wiring, connectors, and grounding. J1 Power connectors shall be LJTPQ00RT25-19.

3.3.5.9 Battery Telemetry Interface

The Contractor shall provide the interface for flight telemetry including specific accommodations to monitor battery voltage, cell voltages, and temperature. J2 Signal connector shall be LJTPQ00RT21-25.

3.3.5.10 Battery Test Interface

The Contractor shall provide the electrical interface for cell monitoring, interface fusing, and battery testing and maintenance during ground activities. J3 Test connector shall be LJTPQ00RT17-35.

3.3.5.11 Battery Disconnect Relay

The battery shall include a power disconnect relay assembly which allows dead facing the battery power lines during spacecraft ground operations. The 2 relays shall be orthogonally mounted.

3.3.5.12 Battery Materials

The Contractor shall provide all cell and battery materials; identify the %Total Mass Loss (TML) and %Collected Volatile Condensable Mass (CVCM) for all battery materials when tested in accordance with the Standard Test Method for Total Mass Loss and Collected Volatile Condensable Materials from Outgassing in a Vacuum Environment (ASTM E595) and resistance to moisture/corrosion damage during ground operations.

3.3.5.13 Cell By-Pass Circuitry

The battery shall include voltage based autonomous cell by-pass switches to protect against overcharge and over-discharge.

3.3.5.14 Cell Balancing Circuitry

The battery shall include cell balancing circuitry to ensure optimal battery charging.

3.3.5.15 Safety Cover

The battery shall include a safety cover to provide Electromagnetic Interference (EMI) and safety/handling protection.

Table 3-2. Cell and Battery Performance Specifications

Battery voltage from 0% to 100% of rated capacity	Within 24 - 34 Volts
Battery capacity at 0˚C, C/2 discharge	0.9C
Battery capacity at 10˚C, C/2 discharge	0.98C
Battery capacity at 20˚C, C/2 discharge	C

Battery capacity at 30˚C, C/2 discharge	1.02C
Battery capacity at 40˚C, C/2 discharge	1.04C
Charge retention after 72 hours of open circuit at 20˚C	0.98C

Number of cell lots for Test and Qualification battery	1
Number of cell lots for Flight and Flight spare battery	1
Cell capacity matching among cells within a battery	<±3%
Impedance matching among cells within a battery	<±1%
Charge retention matching among cells within a battery	<±1%
Maximum battery internal impedance at EOL	<80 milliohms (mΩ)
Isolation resistance between battery terminals and case	1 MΩ at 100 Volts Direct Current (VDC)
Charge control methods for battery operation	Voltage clamp
Maximum inter-cell temperature gradients	3˚C
Ground Storage Temperature, cell/battery	5±5˚C
Transportation temperature, cell/battery	5±5˚C

3.3.6 Mounting

The package will be hard-mounted on a mechanical surface of the spacecraft structure. Proper fit/alignment of the Battery to the structure shall be inherent in its design, fabrication, and assembly to the structure, through the use of matched tooling and/or close dimensional control in the location of mounting holes and the use of correct mounting hardware. The mounting interface shall be defined in the LRO Component Mechanical Interface Control Drawing Guidelines Handbook (431-HDBK-000093) lifting points will be provided.

3.3.7 External Adjustment

The Battery shall be designed so that no external adjustments are required after start of acceptance or qualification testing.

3.3.8 Finish

All parts shall be passivated. Aluminum parts shall be finished with iridite per Chemical Conversion Coatings on Aluminum and Aluminum Alloys (MIL-C-5541), Class 3. Titanium surfaces shall be finished per the Anodic Treatment, Titanium and Titanium Alloys Solution PH 13 or Higher (AMS 2488). The conductive surfaces identified in the design shall be masked.

3.3.9 Identification and Marking

Each unit shall be permanently marked (etched) with the part number and a unique sequential serial number in the area designated on the interface control drawing in a manner to be approved by the NASA/GSFC COTR or his representative.

3.4 ELECTRICAL CHARACTERISTICS

The electrical interface configuration shall meet the overall requirements of this specification.

3.4.1 Inputs

The presence or absence of any combination of the input signals applied in any sequence shall not damage the Battery, reduce its life expectancy, or cause any malfunction, either when the unit is powered or when it is not. No sequence of command shall damage the Battery, reduce its life expectancy, or cause any malfunction.

3.4.1.1 Power Input Configuration

Power to the Battery will be remotely switched using properly de-rated lines. The direct current (DC) power and return will be routed to the component as twisted pairs and will be shielded as required. The power inputs and their associated returns should not use adjacent pins on the connector.

3.4.1.2 Input Voltage Level

Input voltage will be 23 – 34.5V nominal. The Battery and any electronics on the Battery shall not sustain damage at any DC input voltage level between 0 VDC and 40.0 VDC.

3.4.1.3 Internal Fusing/Over-Current Protection

There shall be no internal fusing in the Battery. If required, components may use re-settable solid-state switches for over-current protection.

3.4.1.4 External Commands

External commands as needed by the Battery shall be defined in the LRO Electrical Power Subsystem Specification (431-SPEC-000013).

3.4.2 Connectors

External box connectors shall be chosen from those in the Instructions for EEE Parts Selection, Screening, Qualification, and De-rating (EEE-INST-0002). If the component requirements cannot be met using one of these connectors, equivalent alternates may be used if it meets the de-rating criteria of Instructions for EEE Parts Selection, Screening, Qualification, and De-rating (EEE-INST-0002), or after successful completion of a qualification program based upon the guidelines contained therein.

3.4.2.1 Power Connector

The power connector shall interface the Battery positive and negative terminals with the power bus. This connector shall be LJTPQ00RT25-19, or similar scoop-proof connector, and be keyed to prevent improper connections.

3.4.2.2 Signal Connector

The signal connector shall interface the Battery with the power subsystem signal bus and shall contain the following leads:

a. Battery voltage
b. Battery temperature sensors
c. Cell balancing circuitry status, this is not necessary if it is a passive cell balancing system.
d. 8 cell/string voltages
e. Cell telemetry circuitry should have a 1 amp fuse in the top cell monitor line, not a 10K resistor
f. Battery disconnect relay status
g. Battery disconnect relay command
h. Battery connect relay command
i. Battery connect relay status

The connector shall be LJTPQ00RT21-25, or similar scoop-proof connector, and be keyed to prevent improper connections.

3.4.2.3 Test Connector

Each battery shall be provided with an independent test connector for monitoring battery voltage, cell/string voltages, and battery temperatures. Component test interfaces shall follow the test signal rules listed below:

a. The component may include test signals at test connectors that are not directly wired to a flight circuit (not isolated) and that are used for ground test operations.
b. Test connectors must meet the same specifications as any flight connector on the component.
c. Vendor must provide flight-approved radio frequency (RF), static control covers, connector savers, and mating connectors for all connectors.
d. Circuits wired to the test connectors must be designed to prevent damage due to an external short, test equipment malfunction, or electrostatic discharge (ESD).

The test connector shall contain the following leads:

a. Battery voltage
b. Battery temperature sensors
c. Cell balancing circuitry status, this is not necessary if it is a passive cell balancing system.
d. 8 cell/string voltages buffered by 10k resistors
e. Battery disconnect relay status
f. Battery disconnect relay command

g. Battery connect relay command
h. Battery connect relay status
i. Battery + (for charging C/10)
j. Battery – (for charging C/10)

The connector shall be LJTPQ00RT17-35, or similar scoop-proof connector, and be keyed to prevent improper connections.

3.4.2.4 Wire Sizing and Number

The Battery shall provide power and return inputs, each sized appropriately, to accommodate the C rate current draw within de-rating guidelines of EEE-INST-0002 for wire in a bundle.

3.4.2.5 Cable and Signal Shielding

All signal lines shall be shielded. Power wires shall be shielded on a case-by-case basis, if it is determined to be necessary by the EMC tests performed before Battery delivery. All shields shall be grounded to the chassis of the Battery and not brought through the connectors unless requested.

3.4.3 Grounding

Unregulated 28V power and return shall be isolated from signal and chassis ground by greater than 1 mΩ. Internal to the Battery, signal return will be directly connected to spacecraft signal return. Secondary power and ground shall also be isolated from unregulated 28V power and return by greater than 1 mΩ. The secondary ground of power converter circuits shall also be directly connected to chassis ground. Other circuits within the system shall be referenced to signal ground except where otherwise specified. Redundant signal, power and chassis ground contacts shall be provided at the flight connectors. Chassis ground contacts shall take the shortest possible route to chassis. The design of the Battery ground layout shall minimize high current flow.

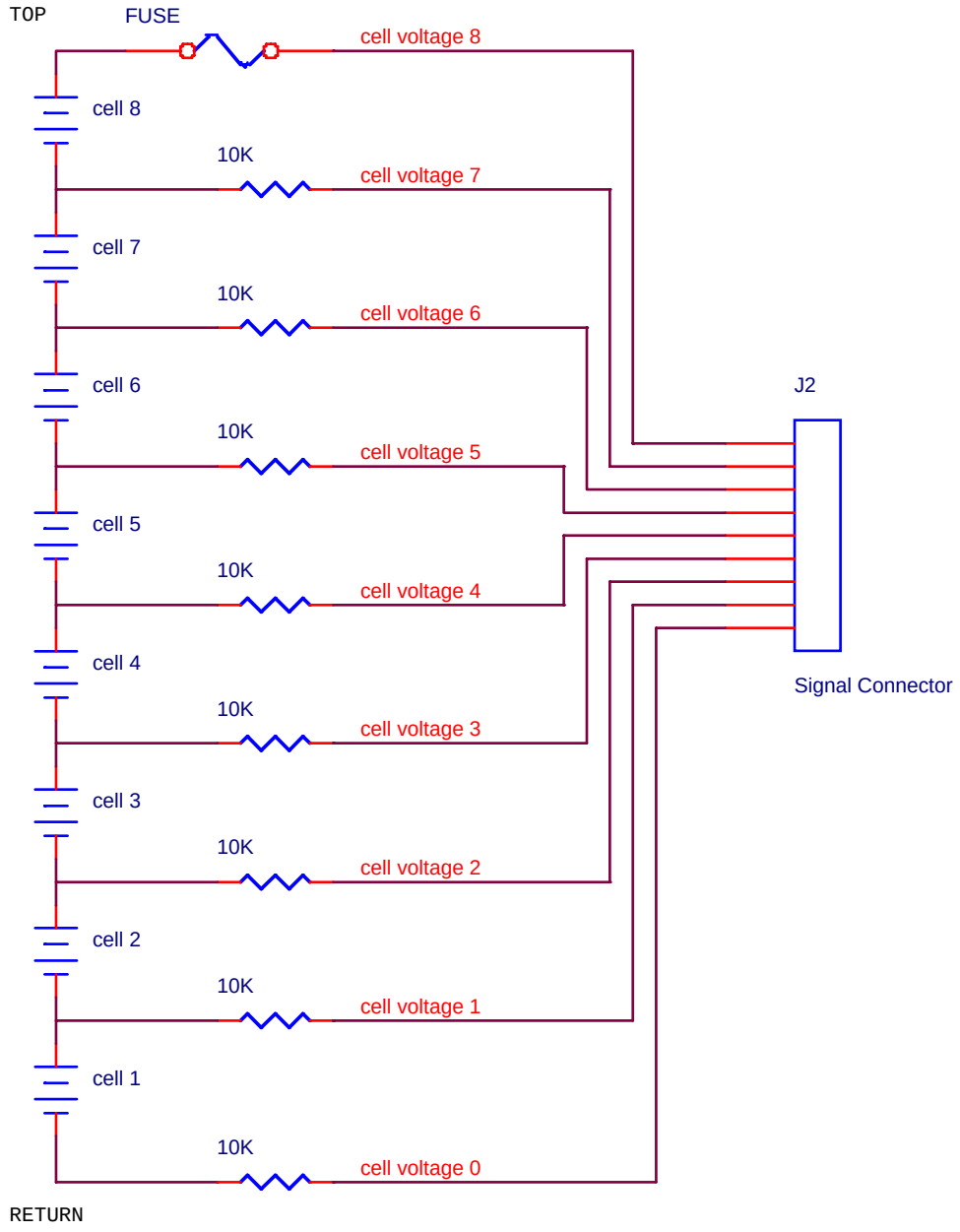

Figure 3-3. Battery Signal Connector (Partial): Cell Voltage Sensing Wiring

The DC electrical resistance across the Battery to spacecraft mounting interfaces shall not exceed 2.5 mΩ. Mating surfaces shall be free from nonconductive finishes and shall maximize contact surface area. Connector shells shall be electrically bonded to the chassis through an electrical resistance not exceeding 5 mΩ. Unless specifically approved by the GSFC COTR or his representative, the component's ground connection shall be made through its mounting interface.

3.4.4 Surface/Dielectric Charging Protection

The Battery shall meet the following requirements in order to survive the LRO charging environment.

3.4.4.1 Internal Charging

The Battery design shall prevent internal charging/discharging effects that can damage the Battery or disrupt operations. Internal charging effects shall be controlled by shielding all electronics elements with sufficient aluminum equivalent thickness (110 mil Aluminum [Al] for bulk dielectrics or to 60 mil Al equivalent for Teflon harness insulation) so that the internal charging rate is benign. (**NOTE**: The Battery is located inside the spacecraft module, and thus can assume 40 mils of equivalent Aluminum shielding from the spacecraft.)

Internal dielectrics materials with bulk resistivity of $>10^{12}$ ohm-cm (such as the connectors, thermal isolators, thermistor mounting, and other materials such as Kapton and Teflon insulators) that do not meet the shielding requirement shall be controlled via one of the methods described in the following:

a. Limit the electron flux to insulators by shielding to 10^{10} electrons/cm^2 in 10 hours. (This can be met with plate shielding with 110 mil Al for bulk dielectrics or to 60 mil Al equivalent for Teflon harness insulation.)
b. Filter nearby circuitry to withstand a 5,000-Volt, 20-pf, 10-ohm discharge. Detailed analysis of discharge could result in smaller or larger discharge source than above.
c. Coat the exterior surface of the dielectric with a grounded layer with a resistivity of $<10^9$ ohm/sq.
d. Prevent the discharge from reaching a victim circuit by EMI shielding and or grounded conductive barrier that will safely absorb and dissipate the discharge.

If none of above control techniques can be applied, the impacts of the discharge from the dielectric material shall be assessed for an approval.

Ungrounded (floating) conductors shall not be allowed in the Battery. This includes unused wires in harnesses; ground test sensors; unused or unpopulated circuit board traces; ungrounded IC, relay, transistor, or capacitor cases; spare pins in connectors; aluminum or copper tape; ungrounded bracketry for harness or connectors; TC105 harness tie-down clips; harness P-clamps; conductive epoxy; thermostat cases; screws; or nut plates.

Leakage impedance of conductive internal parts shall be less than 10,000 ohms. This requirement applies to conductive fittings on dielectric structural parts. Further investigation into these effects and mitigations of internal charging can be found in the Avoiding Problems Caused by Spacecraft On-Orbit Internal Charging Effects (NASA-HDBK-4002).

3.4.5 Dielectric Strength

Dielectric material between mutually isolated electrical circuits shall withstand a test voltage of at least 200 Vac for 60 seconds without exceeding a current of 1.0 mA.

3.4.6 Insulation Resistance

Insulation resistance between mutually isolated electrical circuits shall be at least 100 megaohms at a test voltage of at least 500 VDC for 60 seconds minimum.

3.4.7 EMI/EMC

Any battery electronics shall be compatible with the EMI/EMC levels described in the Electrical Systems Specification, 431-SPEC-000008.

3.5 LIFE REQUIREMENTS

Mission orbit life shall be 18 months with a goal of 60 months, as defined herein, after a maximum of three years of wet storage.

3.6 ENVIRONMENTAL REQUIREMENTS

The component shall be designed to withstand (without degradation of specified performance) the operational and non-operational environments specified in the following section.

3.6.1 Static Loads

The Battery shall demonstrate the ability to survive interface limit loads of Table 3-6. Loads are considered to act in any direction, individually. Structural analyses shall be performed to show positive margins of safety against the "Acceptance Loads" shown in Table 3-6 using a factor of 1.25X with regard to yield and 1.4X with regard to ultimate material strength.

Table 3-3. Component Loads

	Load
Acceptance	12.0 g's vector in any direction
Qualification	15.0 g's vector in any direction

3.6.2 Vibroacoustic Loads

The Battery shall be capable of withstanding the random vibration levels shown in Table 3-7 and the sine vibration levels of Table 3-8, individually applied to three mutually orthogonal axes. Components which are powered on at launch must meet this requirement when powered. (**NOTE**: The Battery is powered at launch.)

Table 3-4. Random Vibration

FREQUENCY (HZ)	Acceptance (Flight) LEVELS (g2/Hz)	Qualification Levels (g^2/Hz)
20	0.008	0.01
20-50	+6dB/oct	+6dB/oct
50-800	0.05	0.05
800-2000	-6dB/oct	-6dB/oct
2000	0.008	0.010
Overall Grms	7.9 Grms	11.2 Grms

Table 3-5. Sine Sweep Vibration Test Levels

Axis	Frequency (Hz)	Acceptance (Flight) Level	Qualification Level
Lateral	5 to 50	6.4 g	8.0 g
Axial	5 to 50	6.4 g	8.0 g

3.6.3 Thermal

The Battery shall be capable of operation with baseplate temperatures defined in Table 3-9. Unless specifically approved by the COTR or his representative, the thermal design shall dissipate heat conductively through the mounting interface, which should be assumed to be at the qualification temperatures.

Table 3-6. Cell/Battery Temperature Limits

Condition	Cold Limit (degrees C)	Hot Limit (degrees C)
Operational Temp	10	30
Acceptance Temp	10	30
Qualification/I&T Temp	0	40
Survival Temp	0	40

3.6.4 Vacuum

The Battery shall be capable of meeting all performance requirements of Section 3.4 at ambient as well as when exposed to a vacuum environment of 1×10^{-6} Torr, or less.

3.6.5 Radiation – Total Dose

Refer to the Radiation Requirements for LRO, 431-RQMT-000045.

3.6.6 Humidity

The Battery shall be capable of meeting the requirements herein during and after exposure to 20 to 70% relative humidity.

3.7 SAFETY REQUIREMENTS

The Contractor shall comply with the battery requirements of Air Force Space Command Manual (AFSCM) 91-710, Volume 3 – Launch Vehicles, Payloads, and Ground Support Systems Requirements. The contractor shall perform a subsystem hazard analysis of the battery and cells in accordance with the Launch Vehicles, Payloads, and Ground Support Systems Requirements (AFSCM 91-710, Volume 1).

The Contractor shall provide test data to demonstrate the cells meet the safety performance tests described in Table 3-10. All internal components shall comply with the bus voltage requirement. Should any of data supporting these tests are unavailable, the concerns shall be discussed and a plan developed to address the concerns.

Table 3-7. Safety Performance Tests

Abuse Tests	
Vent/Burst	Heat to vent of the cells to 200˚C with gas capture and analysis
Drop Test	Drop from 3 feet and 6 feet onto a concrete surface
Internal Short Circuit Test	Crush a cell with a rod along the horizontal position of the cell away from the terminals
External Short Circuit Test	Test using 3 sets of resistors: 500 mΩ, 100 mΩ, 1Ω
Overcharge	Overvoltage charge: charge to 5.0 V clamp for 2 hours at C rate Fast charge: 3 C charge to 4.2 V Overcharge: after full charge, charge for 60 minutes with a 12.0 V clamp at C rate
Overdischarge	Fast discharge: discharge cell at 3C rate to 2.5 V Overdischarge: discharge to 0.0 V and then into reversal for an additional 150% of the rated capacity
Verify/qualify cell by passing function/mechanism	
Performance Tests	
Vent/Burst	Determine the vent pressure of the cells. Determine the burst pressure of the cell can by either carrying out the test on a cell can with no vents or by testing it after closing up the vent ports
Helium Leak Test	Cells are subjected to a vacuum condition for 6 hour and then the chamber is repressurized

4.0 VERIFICATION REQUIREMENTS

The contractor shall conduct a verification program that demonstrates the hardware design is qualified and meets all requirements contained in this document. The contractor shall provide a verification matrix defining the method of verification for each specific requirement of this document. Verification methods include inspection, analysis, test or a combination of these techniques.

4.1 INSPECTION

Verification by inspection includes visual inspection of the physical hardware, a physical measurement of a property of the hardware, or the documentation search demonstrating hardware of an identical design has demonstrated fulfillment of a requirement.

4.1.1 Visual Inspection

Visual inspection of the physical hardware by a customer appointed qualified inspector.

4.1.2 Physical Measurement

Physical measurement of hardware property (i.e. mass, dimensions, etc.) demonstrating the hardware meets specific requirement.

4.1.3 Documentation Search

Verification of requirements based on similarity shall include supporting rationale and documentation and shall be approved by the NASA/GSFC COTR or his representative.

4.2 ANALYSIS

Verification of performance or function through detailed analysis, using all applicable tools and techniques, is acceptable with NASA/GSFC COTR or his representative's approval.

4.3 TEST

Represents a detailed test of performance and/or functionality throughout a properly configured test setup where all critical data taken during the test period is captured for review.

Performance parameter measurements shall be taken to establish a baseline that can be used to assure that there are no data trends established in successive tests that indicate a constant degradation of performance within specification limits that could result in unacceptable performance in flight.

4.3.1 Battery Qualification Test Plan

Battery qualification shall meet the requirements of the Contract, SPEC, and SOW for the LRO batteries. Battery qualification by similarity with a previously flight qualified battery is acceptable. However, the Contractor must provide compliance data that an existing battery

design and manufacturing process has been flight qualified by test and flight experience. Otherwise qualification testing shall be required. The qualification test and procedures shall be submitted to NASA/GSFC for review and approval prior to implementation. The minimum required battery qualification testing is listed in Table 4-1. The qualification test data for the Battery shall be submitted to NASA/GSFC as part of the Pre-Ship Review (PSR) and the Battery Data Book.

Table 4-1. Battery Qualification Test

Qualification battery shall be tested to qualification levels as defined in this sequence.

Visual Inspection	The vendor shall visually inspect the battery to verify that the battery complies with contractor generated and GSFC approved design specifications and to verify the absence of any physical damage.
Physical Measurements	The Vendor shall perform physical measurements on the battery Including dimensional and mass to the Mechanical Environments and Verification Requirements of 431-RMQT-000012
Functional Testing	• Isolation Resistance Check: 100 MΩ or greater at 100 V DC • Temperature Sensor Checkout: Maintain calibration and specifications over temperature range • Mechanical Interface Drawing (MID) Handbook, 431-HDBK-000093, verification • Electrical ICD verification • Capacity Test at 20˚C • Cell balancing circuit verification
Pulse Test	
Loads Test (Battery charged)	• Random Vibration • Sine Vibration • Sine Burst
Pulse Test	
EMI/EMC	
Thermal vacuum	• Electrolyte Leak Check: No cell or battery shall exhibit electrolyte leakage, including a vacuum leak check to $<10^{-8}$cc/sec • Thermal/electrical cycle testing using LRO mission profile
Capacity Measurements	• Capacity Test at 0˚C • Capacity Test at 10˚C • Capacity Test at 20˚C • Charge Retention Test: 0.98C or greater after open circuit for 72 hours at 20˚C • Capacity Test at 30˚C • Capacity Test at 40˚C
Repeat Functional Testing	
Visual Inspection	The vendor shall visually inspect the battery to verify that the battery complies with contractor generated and GSFC approved design specifications and to verify the absence of any physical damage.

Physical Measurements	The Vendor shall perform physical measurements on the battery including dimensional, mass, and Center of Gravity (CG) to the Mechanical Environments and Verification Requirements of 431-RMQT-000012

4.3.2 Battery Acceptance Test Plan

The Contractor shall perform the testing required by the Contract, SPEC and SOW for the LRO batteries. Testing shall be performed to verify that all the requirements are met. The Contractor's acceptance plan and procedures shall be submitted to NASA/GSFC for review and approval prior to implementation. The minimum required battery acceptance testing is listed in Table 4-2. The acceptance test data for each battery shall be submitted to NASA/GSFC as part of the PSR and the Battery Data Book.

Table 4-2. Battery Acceptance Test

Test and flight batteries shall be tested to acceptance levels as defined in this sequence.

Visual Inspection	The vendor shall visually inspect the battery to verify that the battery complies with contractor generated and GSFC approved design specifications and to verify the absence of any physical damage.
Physical Measurements	The Vendor shall perform physical measurements on the battery including dimensional and mass to the Mechanical Environments and Verification Requirements of 431-RMQT-000012
Functional Testing	• Isolation Resistance Check: 100 MΩ or greater at 100 V DC • Temperature Sensor Checkout: Maintain calibration and specifications over temperature range • Mechanical Interface Drawing (MID) Handbook, 431-HDBK-000093, verification • Electrical ICD verification • Capacity Test at 20˚C • Cell balancing circuit verification
Pulse Test	
Loads Test (Battery charged)	• Random Vibration • Sine Vibration • Sine Burst
Pulse Test	
EMI/EMC	
Thermal vacuum	• Electrolyte Leak Check: No cell or battery shall exhibit electrolyte lea including a vacuum leak check to $<10^{-8}$cc/sec • Cycle testing using LRO mission profile
Capacity Measurements	• Capacity Test at 10˚C • Capacity Test at 20˚C • Charge Retention Test: 0.98C or greater after open circuit for 72 hours 20˚C • Capacity Test at 30˚C
Repeat Functional Testing	

Visual Inspection	The vendor shall visually inspect the battery to verify that the battery complies with contractor generated and GSFC approved design specifications and to verify the absence of any physical damage.
Physical Measurements	The Vendor shall perform physical measurements on the battery including dimensional, mass, and CG to the Mechanical Environments and Verification Requirements of 431-RMQT-000012

4.4 TEST RESTRICTIONS

4.4.1 Failure During Test

Testing shall be halted (as appropriate) if an anomaly occurs during testing to prevent potential damage to hardware and to preserve the failure configuration. Anomaly investigations shall be conducted in accordance with manufactures approved procedure(s).

4.4.2 Modification of Hardware

Once the formal acceptance test has started, adjustment, or modification of test hardware shall not be permitted.

4.4.3 Re-Test Requirements

If any event, including test failure, requires that flight hardware to be disassembled and reassembled, then all tests performed prior to the event shall be repeated. If the flight item has multiple copies of the same build, then all units shall be examined to determine if the problem is common. If all copies require disassembly for repair, then each shall receive the same test sequence.

If the event results in redesign of the hardware, a retest program shall be proposed and the design requalification test shall be approved by GSFC COTR or his representative.

If the event results in simple rework of a random part failure, unrelated to the hardware design and test environments, a retest program shall be proposed that adequately screens the workmanship of the rework and reassembly.

4.5 TEST DEFINITIONS AND PARAMETERS

4.5.1 Functional Tests

The contractor will generate detailed functional tests to verify battery operation per items listed in Tables 4-1 and 4-2 and submit for GSFC approval before implementation.

4.5.2 Pulse Test

The fully charged battery is discharged at C/2 rate to a 50% SOC. The pulse test will consist of a 2C discharge for 5 minutes.

4.5.3 Loads Tests

A structure design loads test per the levels in Table 3-6 shall be applied to the battery.

Structural Loads testing can be verified by performing either a fixed frequency Sine Burst test, or a series of static loads pull tests.

No permanent deformation may occur as a result of the loads test, and all applicable alignment requirements must be met following the test. A performance test will be conducted to verify that no damage occurred due to the loads test.

4.5.3.1 Random Vibration

The Battery shall be subjected to a random vibration test along each axis to the appropriate levels shown in Section 3.6.2. The test item will be mounted to the test fixture as it would be mounted to the spacecraft. A functional test will be performed before and after testing.

Prior to the test, a survey of the test fixture/exciter combination will be performed to evaluate the fixture dynamics and the proposed choice of control accelerometers.

Components which are powered on at launch shall meet this requirement when powered. (**NOTE**: The Battery is powered on at launch.)

The duration for the test shall be 1 minute per axis for acceptance and 2 minutes per axis for qualification test.

4.5.3.2 Sine Sweep

The Battery shall be subjected to swept sine vibration testing to the appropriate levels in Section 3.6.2. The sweep rate shall be 4 octaves/minute for Acceptance and 2 octaves/minute for Qual Tests.

The Signature Sine sweep will be conducted on each component before and after vibration testing in each axis. This test is a tool to verify no change in structural integrity from testing and to verify the primary resonant frequency meets requirements of section 3.3.4. Components which are powered on at launch shall meet this requirement when powered.

4.5.3.3 Sine Burst

A simple Sine Burst test following the random vibration test in each axis is a convenient method to conduct a structural loads test. This test applies a ramped sine input at a sufficiently low frequency such that the test item moves as a rigid body. An analysis is required to show that a base drive Sine Burst test will not cause over-test or under-test in some areas of the structure. The Battery will be powered during sine burst testing.

Duration: 5 cycles of full level amplitude.

4.5.4 EMI/EMC

The tests indicated below shall be performed as noted in Section 3.4.8 and below

- Test Unit: CS01/02, CS06, CE01/03, RS03, RE02, and Common Mode Noise
- All subsequent Units: CS01/02, CS06, CE01/03, and Common Mode Noise

It is encouraged to perform these EMI tests as early as possible in the development. The Contractor shall perform EMI emission tests on the battery electronics, battery level testing is not necessary. All tests shall be performed with the Battery in its most sensitive mode for susceptibility testing and in its most noisy mode as appropriate for the EMI emission test. Some EMI/EMC tests will be re-confirmed at the Orbiter level.

4.5.5 Thermal Vacuum Test

Each component shall be cycled a total of twelve (8) times at the component level. During these tests, chamber pressure shall be less than 1.33 X 10-3 Pa. (1 X 10-5 torr).

Components shall be in flight configuration. However, in cases that do not involve mechanisms, thermal blankets may be omitted to speed the transition times between temperature extremes.

4.5.5.1 Temperature Transition

Transitions from cold to hot conditions increase contamination hazards because material that has accreted on the chamber walls may evaporate and deposit on the relatively cool test item. Transitions will be conducted at rates sufficiently slow to prevent that from occurring. Testing will start with a hot soak and end with a hot soak to minimize this risk.

4.5.5.2 Hot/Cold Turn-On Demonstration

The Battery will be cycled twice after exposure to hot and cold survival temperatures. For this test, the Battery may be in one of three modes: open circuit, under voltage-recycle, or high-voltage.

4.5.5.3 Thermal/Electrical

Tests will be conducted during the hot and cold soaks.

Hot plateau is at 40˚C and cold is at 0˚C for qualification battery; 30˚C and 10˚C for test and flight batteries.

For qualification battery:

Thermal	Battery is charged. Thermal cycle to required levels.
First 8 cycles	Soak time at each temperature: 4 hours

Electrical	Plateau at 30˚C. Perform mission cycles to 30% DOD with a 48 min. eclipse and 65 min. charge time. Maximum of 15 cycles or until the last three consecutive cycles become stable. Perform 3 mission cycles to 80% DOD based on a 160 min. eclipse. Repeat at 10˚C plateau. Electrolyte Leak Check: No cell or battery shall exhibit electrolyte leakage, including a vacuum leak check to $<10^{-8}$cc/sec

For test and flight batteries:

Thermal First 8 cycles	Battery is charged. Thermal cycle to required levels. Soak time at each temperature: 4 hours
Electrical	Plateau at 20˚C. Perform mission cycles to 30% DOD with a 48 min. eclipse and 65 min. charge time. Maximum of 15 cycles or until the last three consecutive cycles become stable. Perform 3 mission cycles to 80% DOD based on a 160 min. eclipse. Electrolyte Leak Check: No cell or battery shall exhibit electrolyte leakage, including a vacuum leak check to $<10^{-8}$cc/sec.

4.5.6 Capacity Tests

Capacity tests shall be performed on a fully charged battery at a C/2 discharge to 24V.

Appendix A. Abbreviations and Acronyms

ABBREVIATION/ ACRONYM	DEFINITION
ABML	As-Built Materials List
Ah	Ampere-hour
ANSI	American National Standards Institute
BBR	Battery Buyoff Review
BBU	Breadboard Unit
BGA	Ball Grid Arrays
BOL	Beginning of Life
BSP	Board Support Package
C	Current equal to rated capacity
°C	Degrees Celsius
C&DH	Command and Data Handling
CBR	Cell Buyoff Review
CDR	Critical Design Review
CGA	Column Grid Arrays
CM	Configuration Management
CO	Contracting Officer
COTR	Contracting Officer Technical Representative
CVCM	Collected Volatile Condensable Mass
DC	Direct Current
DOD	Depth-of-Discharge
DPA	Destructive Physical Analysis
EEE	Electrical, Electronic, Electromechanical
EMI	Electromagnetic Interference
EOL	End-of-Life
ESD	Electrostatic-Discharge
FMEA	Failure Modes and Effects Analysis
FRB	Failure Review Board
FU	Flight Unit
GEO	Geosynchronous Orbit
GIDEP	Government Industry Data Exchange Program
GSE	Ground Support Equipment
GSFC	Goddard Space Flight Center
ICD	Interface Control Document
LET	Linear Energy Transfer
Li-Ion	Lithium Ion
LRO	Lunar Reconnaissance Orbiter
M&P	Materials and Process Identification List
MCD	Manufacturing Control Document
MCM	Multi-Chip Modules
MIP	Mandatory Inspection Point

ABBREVIATION/ ACRONYM	DEFINITION
MRB	Material Review Board
MUA	Materials Usage Agreement
NASA	National Aeronautics and Space Administration
OSS	Office of Space Science
PEMs	Plastic Encapsulated Microcircuits
PER	Pre-Environmental Review
PIL	Parts Identification List
PIND	Particle Impact Noise Detection
PSR	Pre-Ship Review
PWB	Printed Wiring Board
QA	Quality Assurance
QCM	Quartz Crystal Microbalance
RBP	Reliability Block Diagrams
ROM	Read-Only Memory
SCC	Stress Corrosion Cracking
SCM	Software Configuration Management
S/C	Spacecraft
SEE	Single-Event Effects
SEU	Single-Event Upset
SOC	State of Charge
SOW	Statement of Work
SUROM	Startup Read-Only Memory
TML	Total Mass Loss
TID	Total Ionizing Dose
TIM	Technical Interchange Meeting
TQCM	Temperature Controlled Quartz Crystal Microbalance
V	Volt
WVR	Waiver