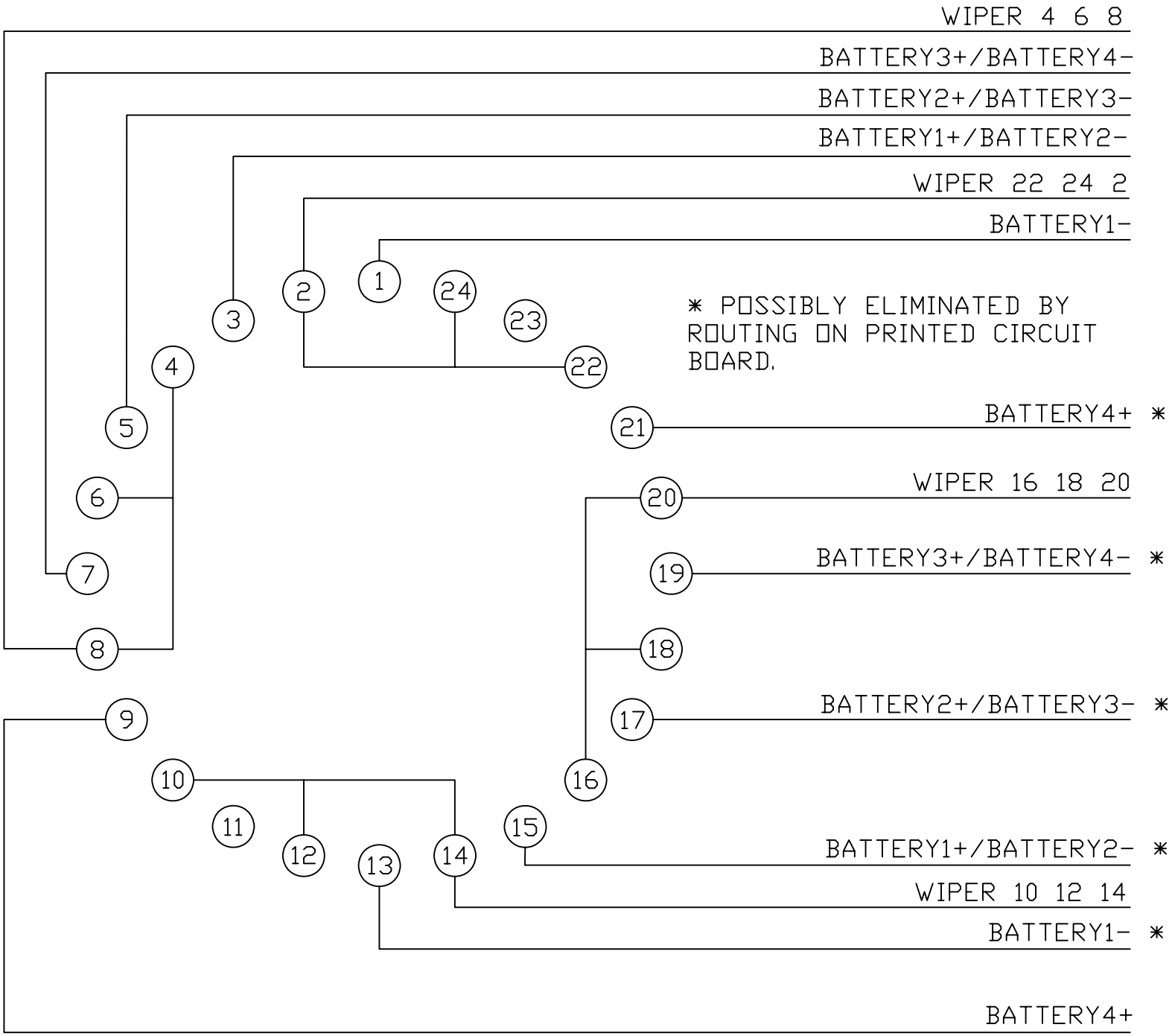
WIPER 4 6 8
BATTERY3+/BATTERY4-
BATTERY2+/BATTERY3-
BATTERY1+/BATTERY2-
WIPER 22 24 2
BATTERY1-
* POSSIBLY ELIMINATED BY ROUTING ON PRINTED CIRCUIT BOARD.
BATTERY4+ *
WIPER 16 18 20
BATTERY3+/BATTERY4- *
BATTERY2+/BATTERY3- *
BATTERY1+/BATTERY2- *
WIPER 10 12 14
BATTERY1- *
BATTERY4+
1
2
3
4
5
6
7
8
9
10
11
12
13
14
15
16
17
18
19
20
21
22
23
24