NOTICE - THIS CONFIDENTIAL DRAWING, SPECIFICATIONS, OR OTHER DATA ARE LOAN FOR ANY PURPOSE EXCEPT THAT IN CONNECTION WITH A DEFINITELY RELATED GOVERNMENT PROCUREMENT OPERATION, THE UNITED STATES GOVERNMENT. THEREBY DECLINE NO RESPONSIBILITY NOR ANY OBLIGATION WHATSOEVER, AND THE FACT OF ANY LOAN, DISCLOSURE, OR ANY USE MADE THEREOF IS NOT TO BE DEEMED TO IMPLY, NOR DO THE DRAWINGS/SPECIFICATIONS OR OTHER DATA IT MAY TO BE REGARDED AS IMPLICATION OR OTHERWISE AS IN ANY MANNER LICENSING THE HOLDER OR ANY OTHER PERSON OR CORPORATION, OR CONFERRING ANY RIGHTS OR PERMISSION TO MANUFACTURE, USE, OR SELL ANY PATENTED INVENTION THAT MAY IN ANY WAY BE RELATED THERETO.

REVISIONS			
SYM	DESCRIPTION	DATE	APPROVAL

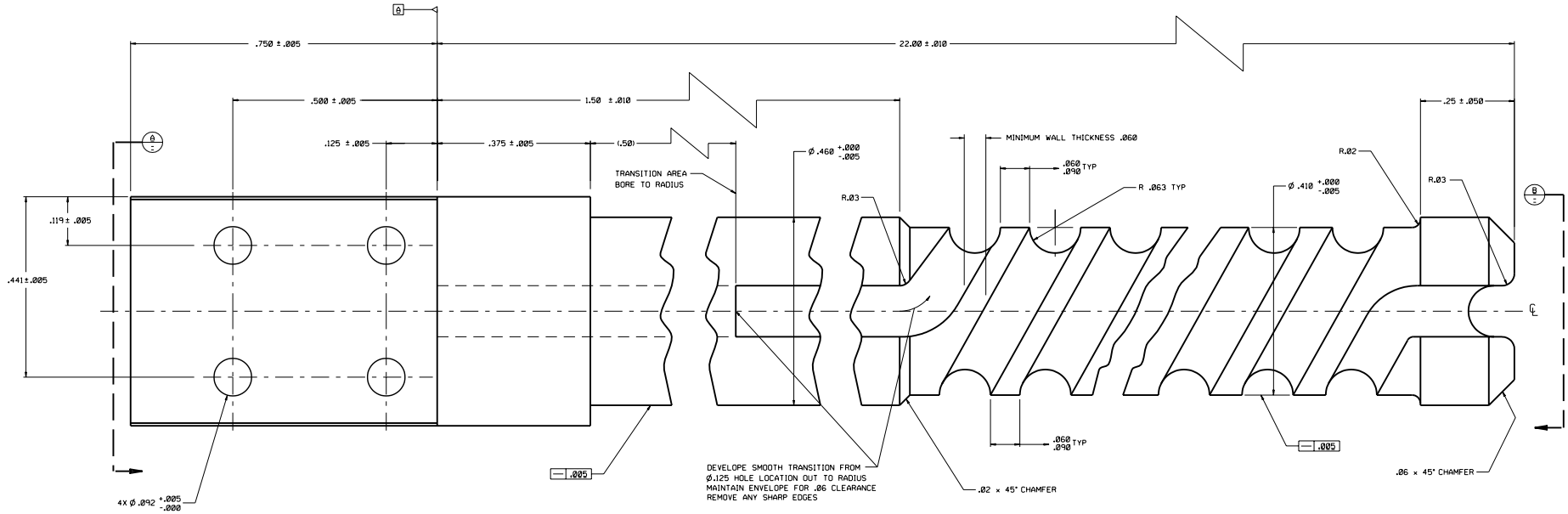

MACHINING DETAIL

SCALE: 10:1
MATERIAL: 998 ALUMINA

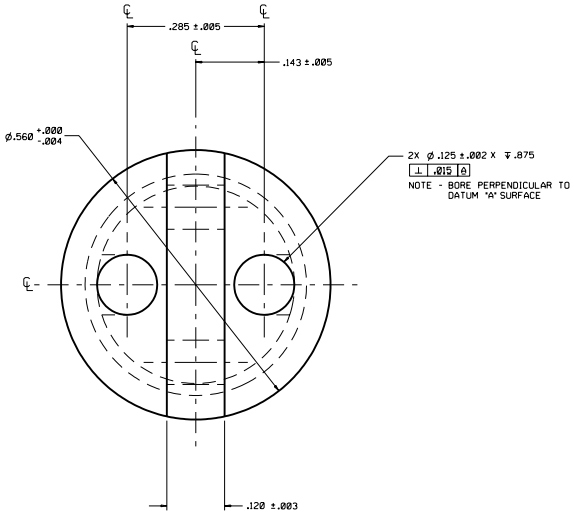

VIEW A

SCALE: 10:1

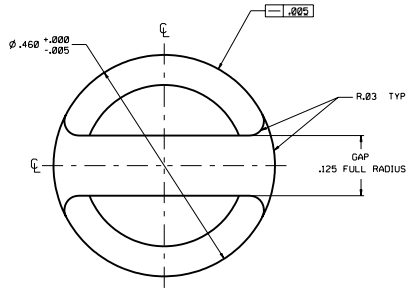

VIEW B

SCALE: 10:1

SK01212005

REVISION

PRELIMINARY
HAS NOT COMPLETED REVIEW CYCLE
AND IS SUBJECT TO CHANGE
3-9-05

UNLESS OTHERWISE SPECIFIED DIMENSIONS ARE IN INCHES TOLERANCES ARE: FRACTIONS ± 1/16 · DECIMALS .X ± .06 .XX ± .03 .XXX ± .010 · ANGLES ± 1/2° DO NOT SCALE DRAWING	DESIGN ENGINEER / TEST ENGINEER/RESEARCHER / STRESS / MATERIALS / INDUSTRIAL SAFETY / DESIGN APPROVAL	ALUMINA HEATING DOUBLE LEAD THREAD DOUBLE HELIX @ 180° APART D - FLATS	SPECIAL TEST EQUIPMENT DESIGN GROUP GEORGE C. MARSHALL SPACE FLIGHT CENTER NATIONAL AERONAUTICS AND SPACE ADMINISTRATION HUNTSVILLE, ALABAMA
LOCATION: BUILDING 4205 NEXT ASSEMBLY: ____ LAST DETAIL, SECTION, OR VIEW LETTER USED: B		DETAILER: MBA · DATE: 1-21-05 · OFFICE CODE: ED38 CHECKER: JOO · SCALE: NOTED	SIZE: FTM · SK01212005 SHEET 1 OF 1