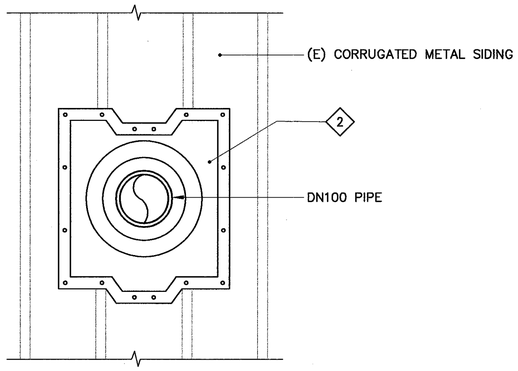

A FP5 PIPE PENETRATION THRU EXTERIOR CORRUGATED METAL WALL
NTS

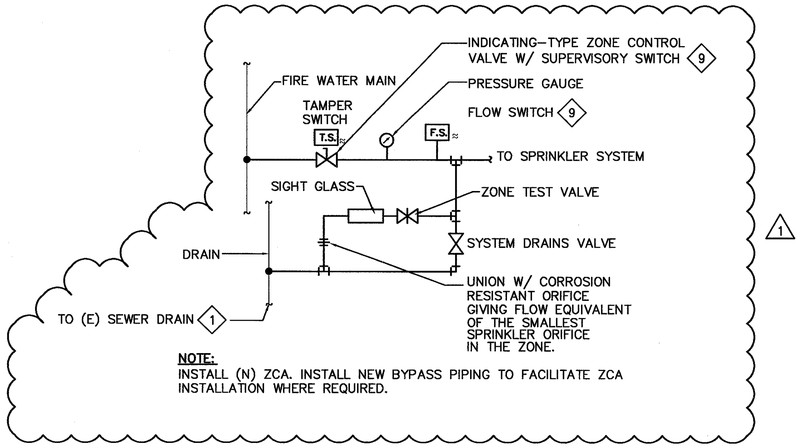

B FP5 ZONE CONTROL ASSEMBLY DETAIL (TYP)
NTS

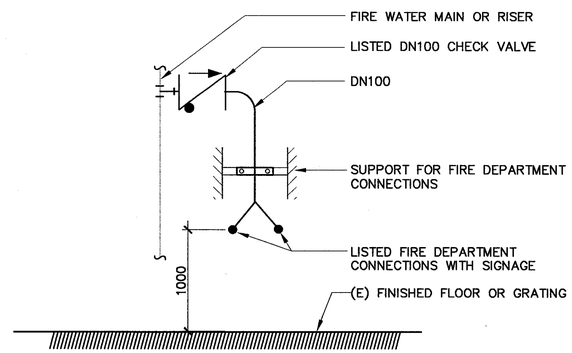

C FP5 FIRE DEPARTMENT CONNECTION DETAIL (TYP.)
NTS

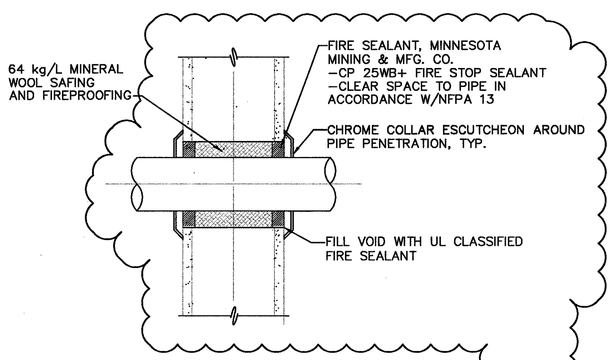

3A PIPE THRU INTERIOR WALL
NTS

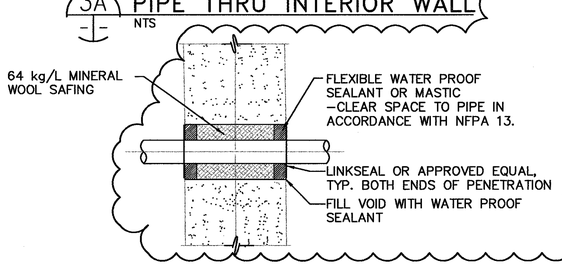

3B PIPE THRU EXTERIOR WALL
NTS

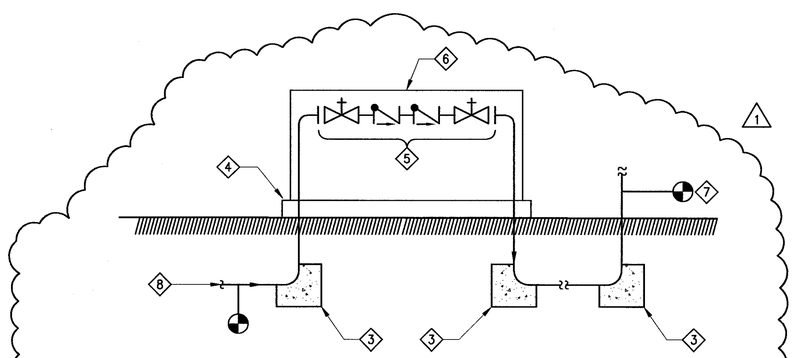

D FP5 REDUCED PRESSURE ZONE BACKFLOW ASSEMBLY
NTS

SHEET NOTES:

1. ALL PIPE HANGERS AND SUPPORTS SHALL HAVE FACTORY MUTUAL APPROVAL AND UL LISTING.

KEY NOTES:

1. DRAIN CONNECTION TO (E) SEWER MUST BE A LISTED INDIRECT CONNECTION.
2. INSTALL (N) EPDM FLASHING AND SEAL WATERTIGHT FOR PIPE PENETRATION THROUGH (E) CORRUGATED METAL WALL. FLASHING ASSEMBLY SHALL BE "PORTALS PLUS" DECK-MATE MODEL DM5 OR APPROVED EQUAL.
3. THRUST BLOCKS SHALL BE INSTALLED AT EACH CHANGE IN THE DIRECTION OF THE PIPING AND AT ALL TEES, PLUGS, SADDLE CONNECTIONS, CAPS AND BENDS AS PER NFPA 13, SEE 1/C1 .
4. CONCRETE PAD, SEE 2/C1 .
5. REDUCED PRESSURE ZONE BACKFLOW PREVENTER ASSEMBLY, WATTS MODEL 909OSY OR APPROVED EQUAL.
6. PROTECTIVE ENCLOSURE WITH LOCKING PADLOCK, TAMPER RESISTANT, AND FOR EXTERIOR USE.
7. CONNECT TO (E) WET PIPE FIRE SPRINKLER RISER.
8. CONNECT TO (E) UNDERGROUND WATER MAIN.
9. TAMPER SWITCH AND FLOW SWITCH TO BE PROVIDED AND INSTALLED BY CONTRACTOR. ELECTRICAL CONNECTIONS (INCLUDING WIRING AND CONDUIT ROUTING) TO EXISTING FIRE ALARM SYSTEM TO BE DONE BY CONTRACTOR PRIOR TO TESTING OF NEW SPRINKLER SYSTEM.

1

ZONE	LETTER	DESCRIPTION	DRAWN	DATE	APPRVD
	1	ADD BACKFLOW PREVENTER	G.K.	05/26/05	

REVISIONS

DRAWN JSVALENCIA	DATE
DESIGNED P.WAN	DATE
CHECKED P.PARTHASARATHY	DATE
PROJMGR P.WAN	DATE
REQUESTER A.IKAN	DATE
R&QA –	DATE
SAFETY –	DATE
SUPERVISOR E.JENNINGS	DATE
	DATE

Ames Research Center
Moffett Field, California

N245 FIRE SUPPRESSION/FIRE ALARM SYSTEM MOD.
FIRE PROTECTION

DETAILS

SIZE	CAGE CODE	
D	25307	A 245-0101-FP5 REV
SCALE AS NOTED		INDEX SHEET OF

FILE NAME: FP5 05-26-05

122506.000

DWG: P:\ARC\245\122506.000\FP5.dwg Version: 16.0s (LMS Tech) User: Kong
DATE: Jun 01, 2005 - 12:01:23 pm Images:
Xrefs: