A/R/C Associates Incorporated

Architecture
Roof Consulting
Construction Technology

601 North Fern Creek Avenue
Suite 100 Orlando, FL.32803-4899
Tel. (407)896-7875 Fax. (407)898-6043

COPYRIGHT © 1997 A/R/C ASSOCIATES

ROOF CUT DATA

PROJECT NAME
NASA - VAB LOW BAY

PROJECT # 04028.02 DATE 3/25/05

ROOF CUT 1

ROOF AREA A/1

MEMBRANE : B.U.R. WITH GRAVEL

INSULATION : 1" PERLITE BOARD
ADHERED TO 2" ISOCYANURATE

DECK : STRUCTURAL CONCRETE SLAB

REMARKS : 1 1/2" B.U.R.

TEST PULL : N/A

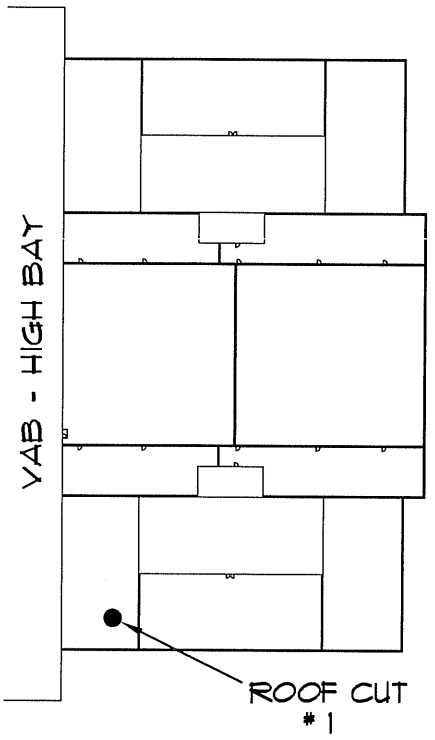

ROOF PLAN
NOT TO SCALE

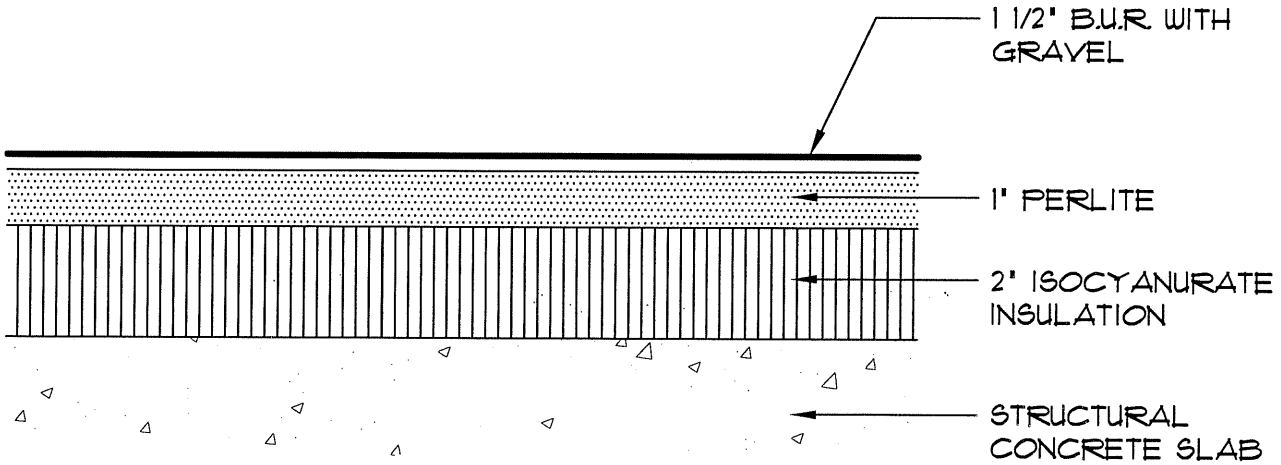

A/R/C
Associates
Incorporated

Architecture
Roof Consulting
Construction Technology

601 North Fern Creek Avenue
Suite 100 Orlando, FL.32803-4899
Tel. (407)896-7875 Fax. (407)898-6043
COPYRIGHT © 1997 A/R/C ASSOCIATES

ROOF CUT DATA

PROJECT NAME
NASA - VAB LOW BAY

PROJECT # 04028.02 DATE 3/25/05

ROOF CUT 2

ROOF AREA A/2

MEMBRANE : B.U.R. WITH GRAVEL

INSULATION : 1 1/4" PERLITE BOARD
ADHERED TO 2" ISOCYANURATE

DECK : STRUCTURAL CONCRETE SLAB

REMARKS :

TEST PULL : N/A

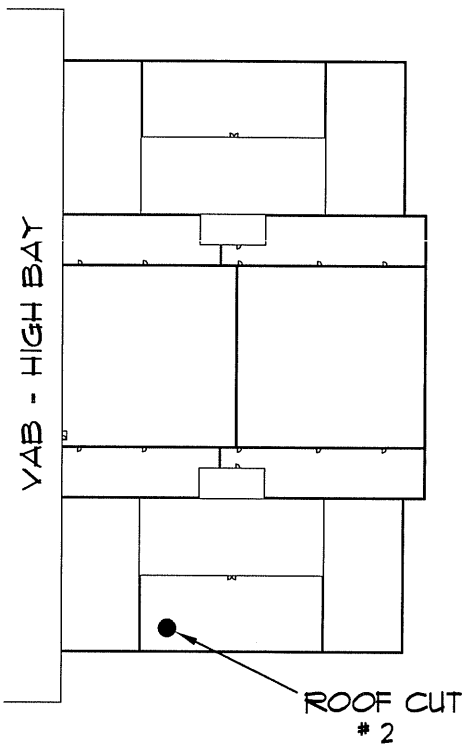

ROOF PLAN
NOT TO SCALE

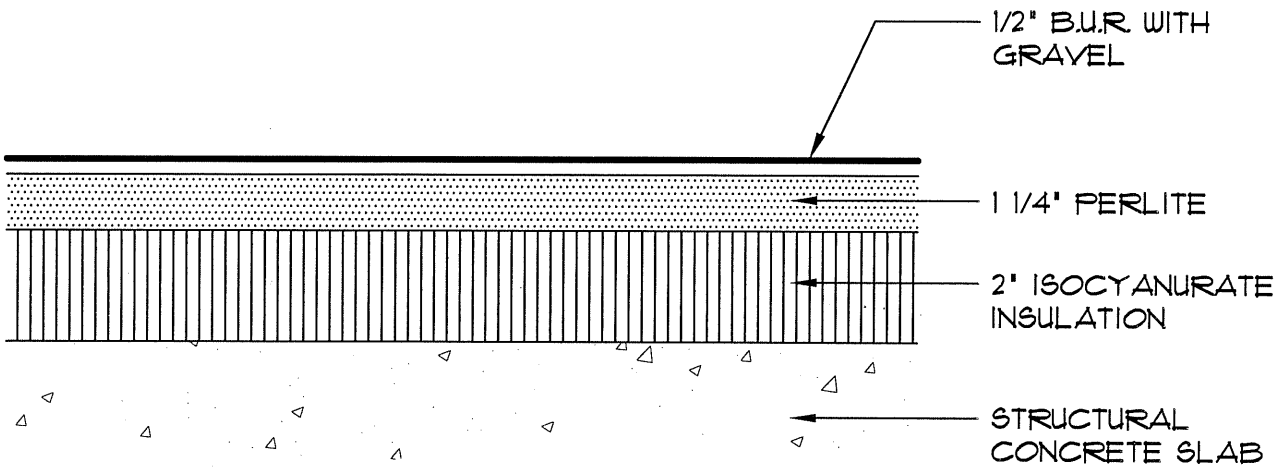

A/R/C Associates Incorporated

Architecture
Roof Consulting
Construction Technology

601 North Fern Creek Avenue
Suite 100 Orlando, FL.32803-4899
Tel. (407)896-7875 Fax. (407)898-6043

COPYRIGHT © 1997 A/R/C ASSOCIATES

ROOF CUT DATA

PROJECT NAME
NASA - VAB LOW BAY

PROJECT # 04028.02 DATE 3/25/05

ROOF CUT 3

ROOF AREA A/3

MEMBRANE : B.U.R. WITH GRAVEL

INSULATION : 1/2" PERLITE BOARD
ADHERED TO 4" ISOCYANURATE

DECK : STRUCTURAL CONCRETE SLAB

REMARKS :

TEST PULL : N/A

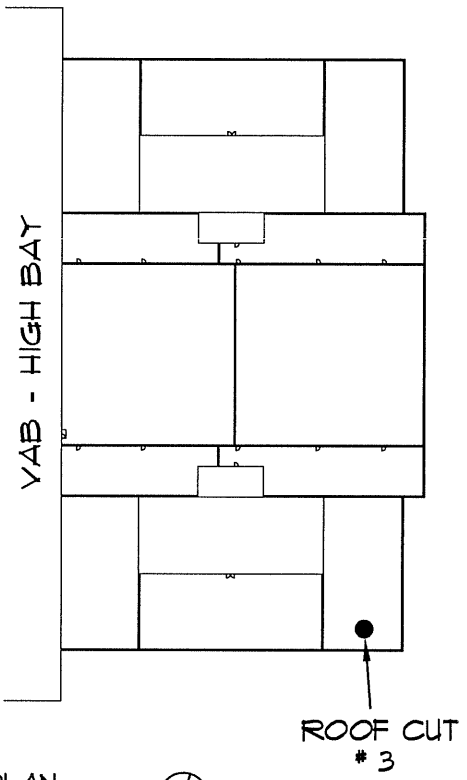

ROOF PLAN
NOT TO SCALE

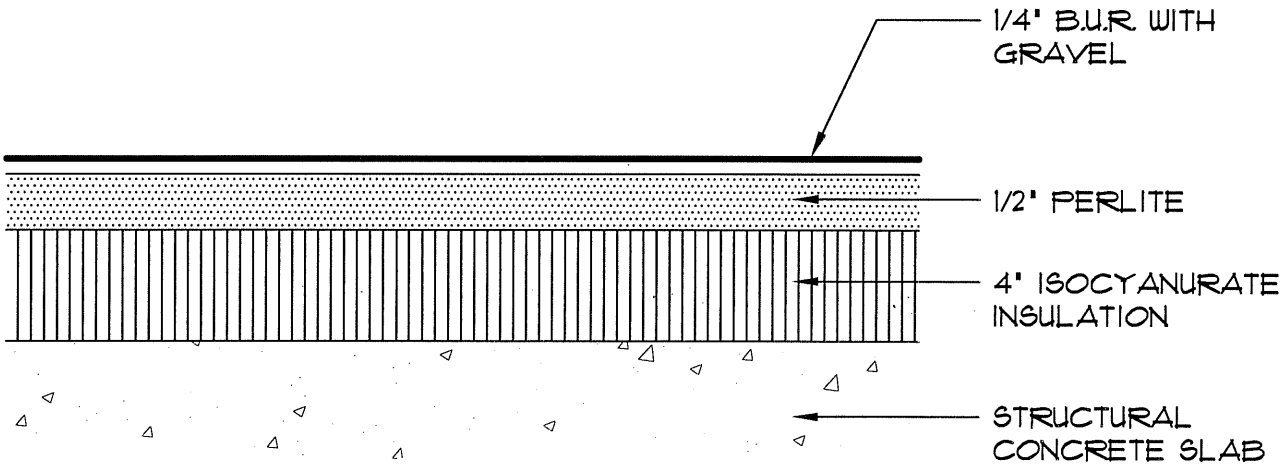

A/R/C Associates Incorporated

Architecture
Roof Consulting
Construction Technology

601 North Fern Creek Avenue
Suite 100 Orlando, FL.32803-4899
Tel. (407)896-7875 Fax. (407)898-6043

COPYRIGHT © 1997 A/R/C ASSOCIATES

ROOF CUT DATA

PROJECT NAME
NASA - VAB LOW BAY

PROJECT # 04028.02 DATE 3/25/05

ROOF CUT 4

ROOF AREA A/4

MEMBRANE : B.U.R. WITH GRAVEL

INSULATION : 1" PERLITE BOARD
ADHERED TO 4 1/2" ISOCYANURATE

DECK : STRUCTURAL CONCRETE SLAB

REMARKS :

TEST PULL : N/A

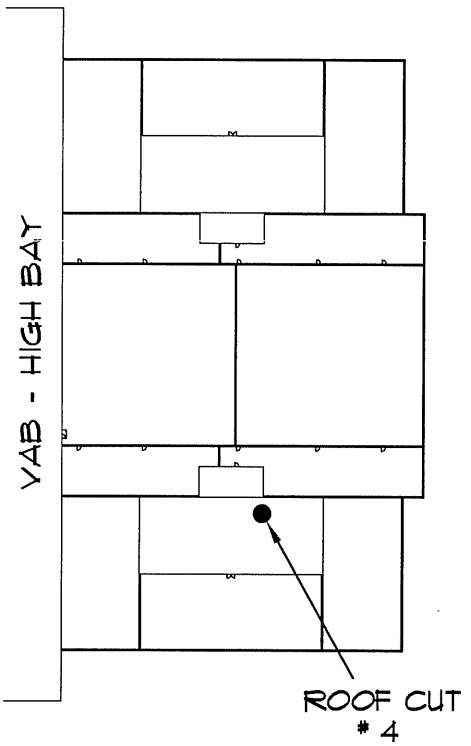

ROOF PLAN
NOT TO SCALE

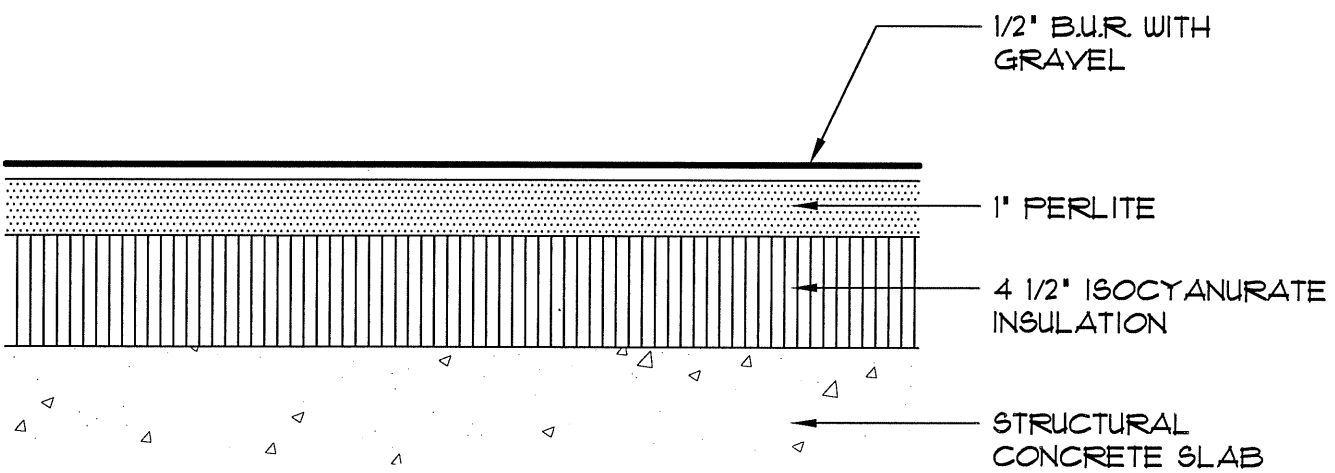

A/R/C
Associates
Incorporated

Architecture
Roof Consulting
Construction Technology

601 North Fern Creek Avenue
Suite 100 Orlando, FL.32803-4899
Tel. (407)896-7875 Fax. (407)898-6043
COPYRIGHT © 1997 A/R/C ASSOCIATES

ROOF CUT DATA

PROJECT NAME
NASA - VAB LOW BAY

PROJECT # 04028.02 DATE 3/25/05

ROOF CUT 5

ROOF AREA A/6

MEMBRANE : B.U.R. WITH GRAVEL

INSULATION : 1" PERLITE BOARD
ADHERED TO 2" ISOCYANURATE

DECK : STRUCTURAL CONCRETE SLAB

REMARKS :

TEST PULL : N/A

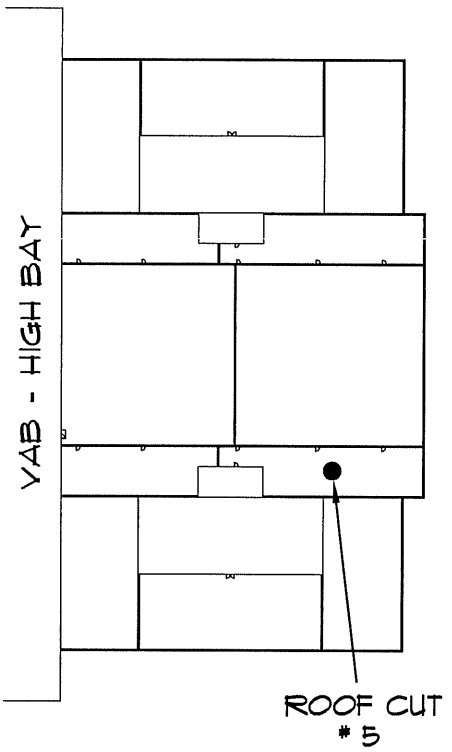

ROOF PLAN
NOT TO SCALE

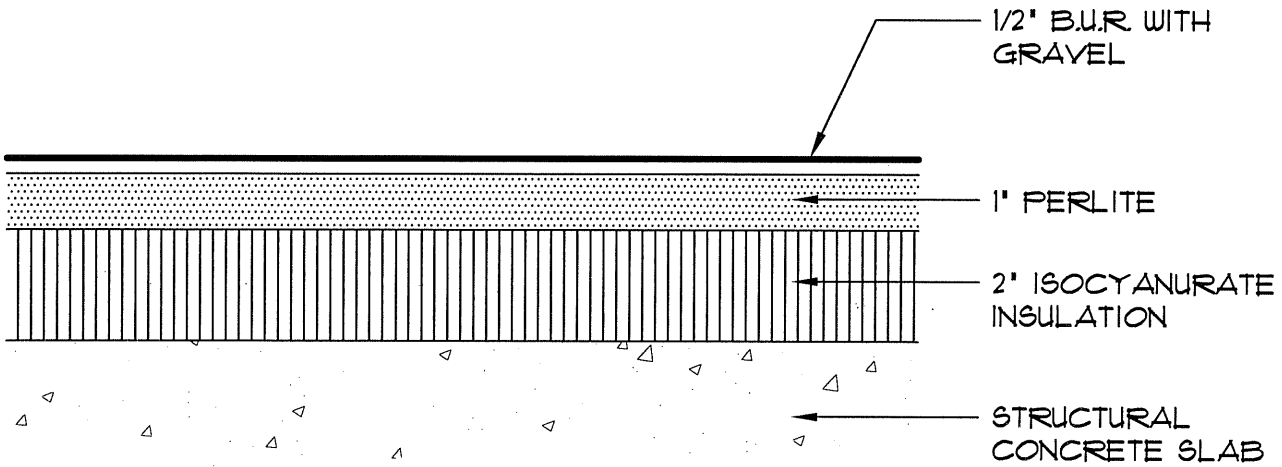

A/R/C Associates Incorporated
Architecture
Roof Consulting
Construction Technology
601 North Fern Creek Avenue
Suite 100 Orlando, FL.32803-4899
Tel. (407)896-7875 Fax. (407)898-6043
COPYRIGHT © 1997 A/R/C ASSOCIATES

ROOF CUT DATA

PROJECT NAME
NASA - VAB LOW BAY

PROJECT # 04028.02 DATE 3/25/05

ROOF CUT 6

ROOF AREA A/5

MEMBRANE : B.U.R. WITH GRAVEL

INSULATION : 1" PERLITE BOARD
ADHERED TO 2" ISOCYANURATE

DECK : STRUCTURAL CONCRETE SLAB

REMARKS : 2 ROOFS

TEST PULL : N/A

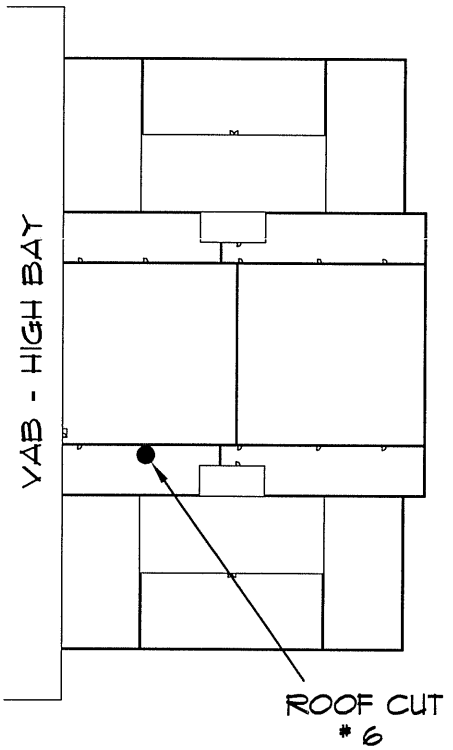

ROOF PLAN
NOT TO SCALE

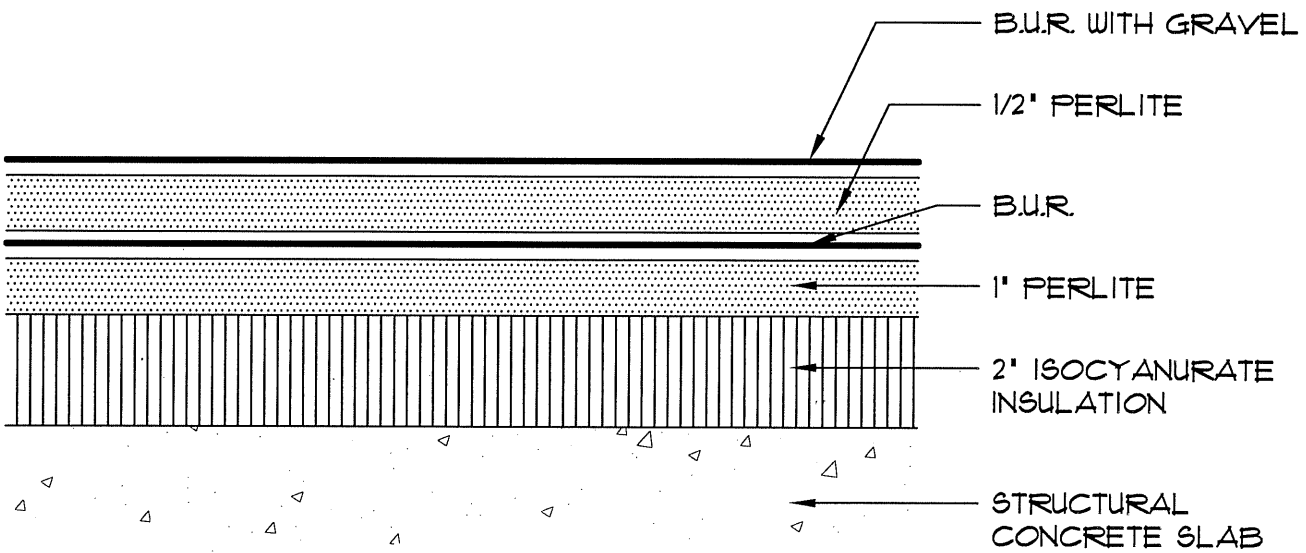

A/R/C Associates Incorporated

Architecture
Roof Consulting
Construction Technology

601 North Fern Creek Avenue
Suite 100 Orlando, FL.32803-4899
Tel. (407)896-7875 Fax. (407)898-6043

COPYRIGHT © 1997 A/R/C ASSOCIATES

ROOF CUT DATA

PROJECT NAME
NASA - VAB LOW BAY

PROJECT # 04028.02 DATE 3/25/05

ROOF CUT 7

ROOF AREA A/7

MEMBRANE : B.U.R. WITH GRAVEL

INSULATION : 1/2" PERLITE BOARD
ADHERED TO 3" ISOCYANURATE

DECK : STRUCTURAL CONCRETE SLAB

REMARKS :

TEST PULL : N/A

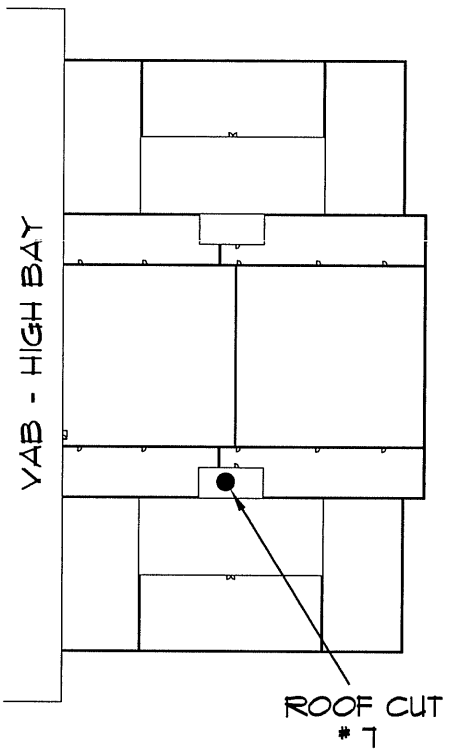

ROOF PLAN
NOT TO SCALE

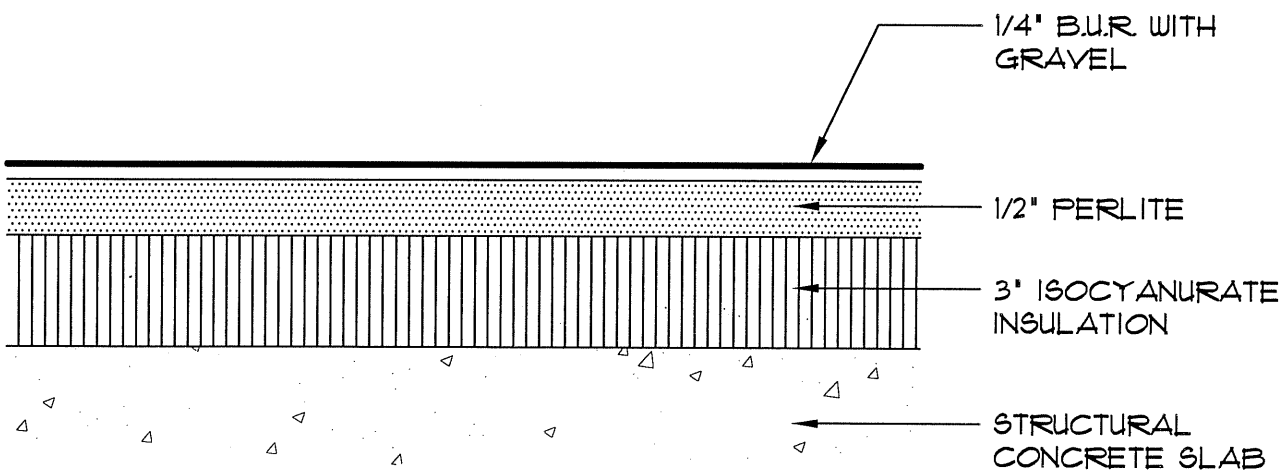

A/R/C Associates Incorporated

Architecture
Roof Consulting
Construction Technology

601 North Fern Creek Avenue
Suite 100 Orlando, FL.32803-4899
Tel. (407)896-7875 Fax. (407)898-6043

COPYRIGHT © 1997 A/R/C ASSOCIATES

ROOF CUT DATA

PROJECT NAME
NASA - VAB LOW BAY

PROJECT # 04028.02 DATE 3/25/05

ROOF CUT 8

ROOF AREA A/15

MEMBRANE : B.U.R. WITH GRAVEL

INSULATION : 1/2" PERLITE BOARD
ADHERED TO 4" ISOCYANURATE

DECK : STRUCTURAL CONCRETE SLAB

REMARKS :

TEST PULL : N/A

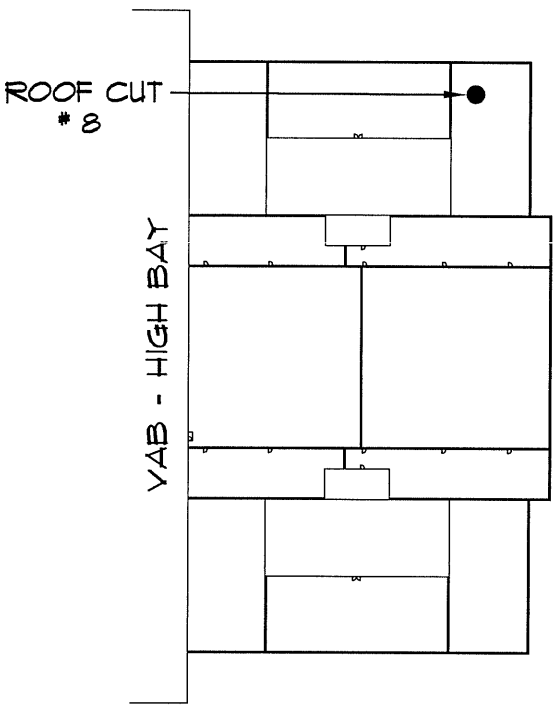

ROOF PLAN
NOT TO SCALE

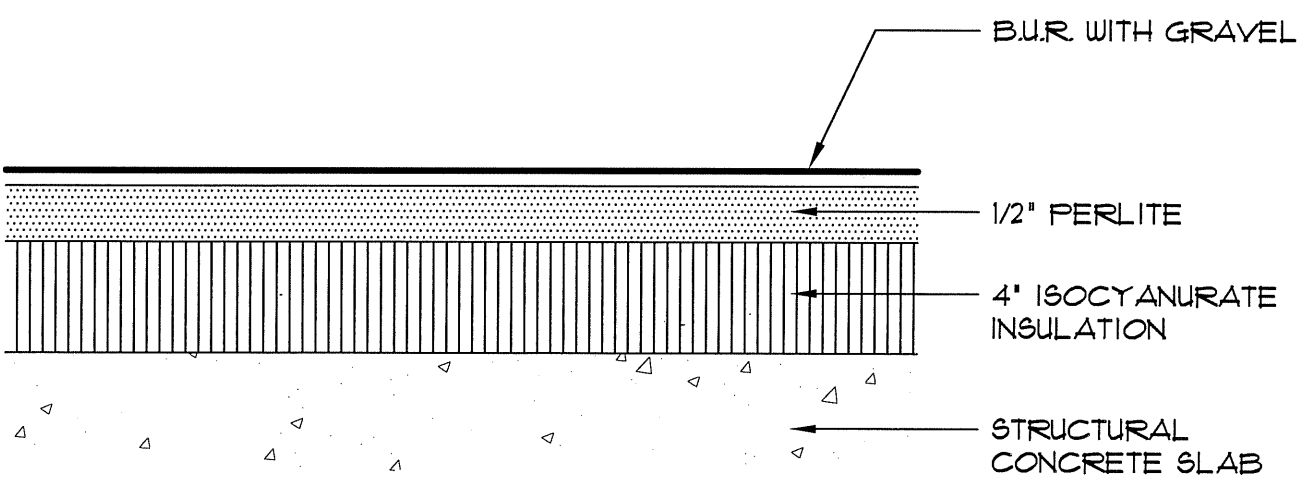

A/R/C Associates Incorporated

Architecture
Roof Consulting
Construction Technology

601 North Fern Creek Avenue
Suite 100 Orlando, FL.32803-4899
Tel. (407)896-7875 Fax. (407)898-6043

COPYRIGHT © 1997 A/R/C ASSOCIATES

ROOF CUT DATA

PROJECT NAME
NASA - VAB LOW BAY

PROJECT # 04028.02 DATE 3/25/05

ROOF CUT 9

ROOF AREA A/14

MEMBRANE : B.U.R WITH GRAVEL

INSULATION : 2 3/4" PERLITE BOARD
ADHERED TO 2" ISOCYANURATE

DECK : STRUCTURAL CONCRETE SLAB

REMARKS :

TEST PULL : N/A

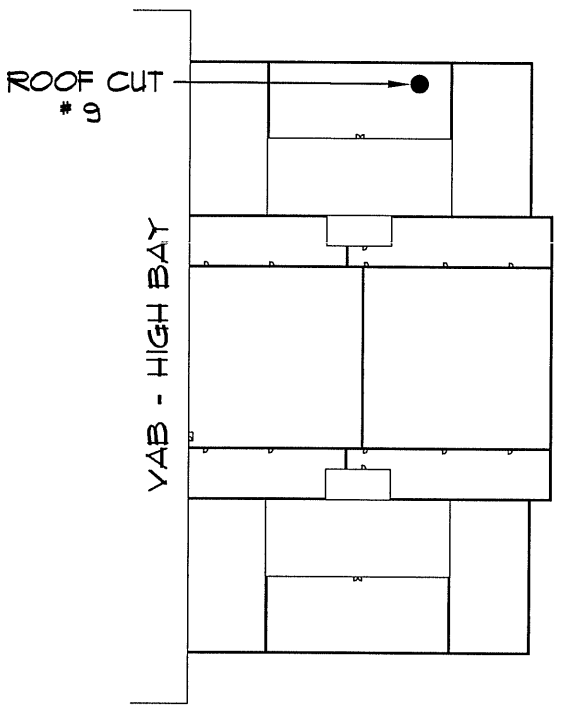

ROOF PLAN
NOT TO SCALE

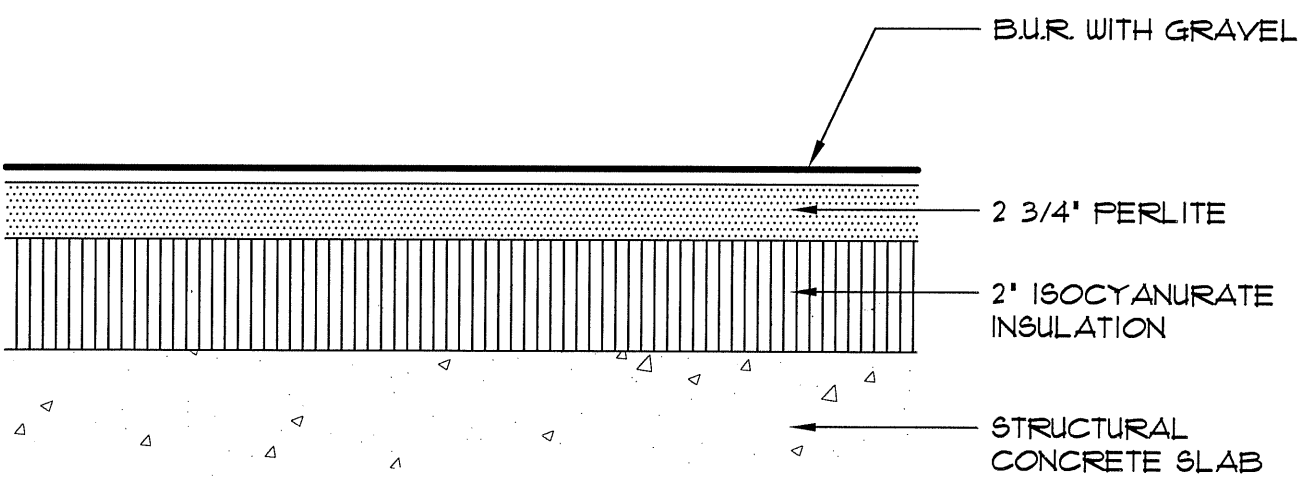

A/R/C Associates Incorporated

Architecture
Roof Consulting
Construction Technology

601 North Fern Creek Avenue
Suite 100 Orlando, FL.32803-4899
Tel. (407)896-7875 Fax. (407)898-6043

COPYRIGHT © 1997 A/R/C ASSOCIATES

ROOF CUT DATA

PROJECT NAME
NASA - VAB LOW BAY

PROJECT # 04028.02 DATE 3/25/05

ROOF CUT 10

ROOF AREA A/13

MEMBRANE : B.U.R. WITH GRAVEL

INSULATION : 2 1/4" PERLITE BOARD
ADHERED TO 2" ISOCYANURATE

DECK : STRUCTURAL CONCRETE SLAB

REMARKS :

TEST PULL : N/A

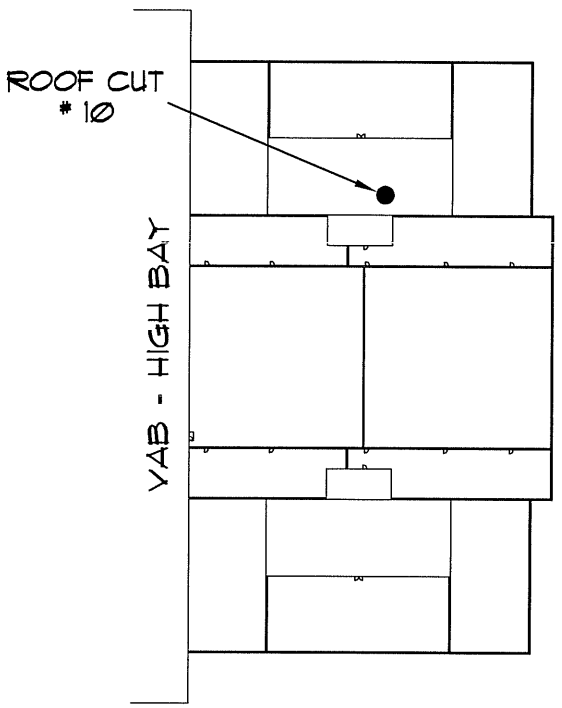

ROOF PLAN
NOT TO SCALE

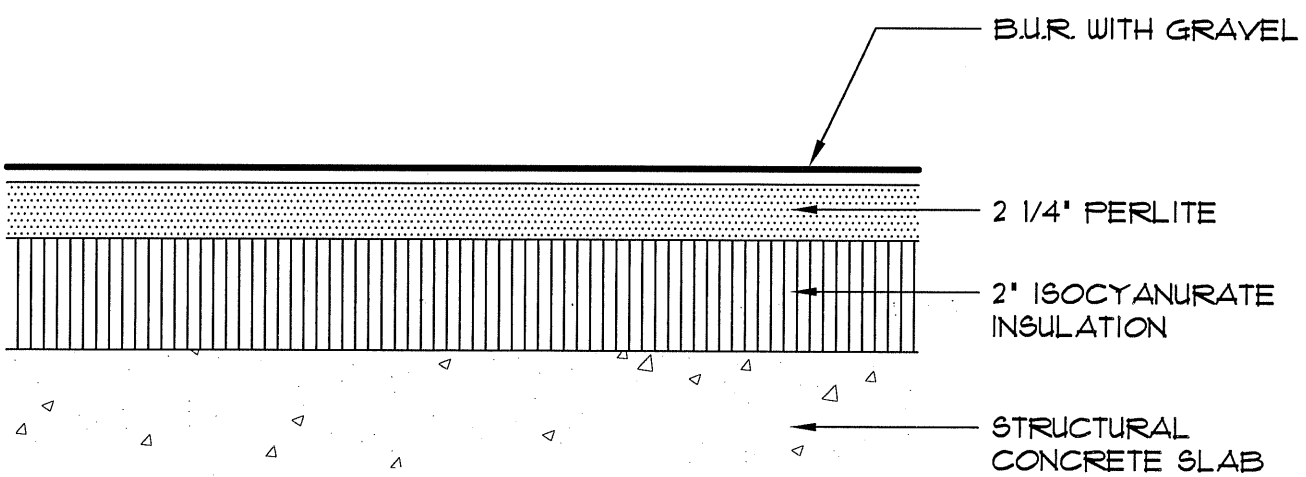

A/R/C Associates Incorporated

Architecture
Roof Consulting
Construction Technology

601 North Fern Creek Avenue
Suite 100 Orlando, FL.32803-4899
Tel. (407)896-7875 Fax. (407)898-6043

COPYRIGHT © 1997 A/R/C ASSOCIATES

ROOF CUT DATA

PROJECT NAME
NASA - VAB LOW BAY

PROJECT # 04028.02 DATE 3/25/05

ROOF CUT 11

ROOF AREA A/10

MEMBRANE : B.U.R. WITH GRAVEL

INSULATION : 1 1/2" PERLITE BOARD
ADHERED TO 2" ISOCYANURATE

DECK : STRUCTURAL CONCRETE SLAB

REMARKS :

TEST PULL : N/A

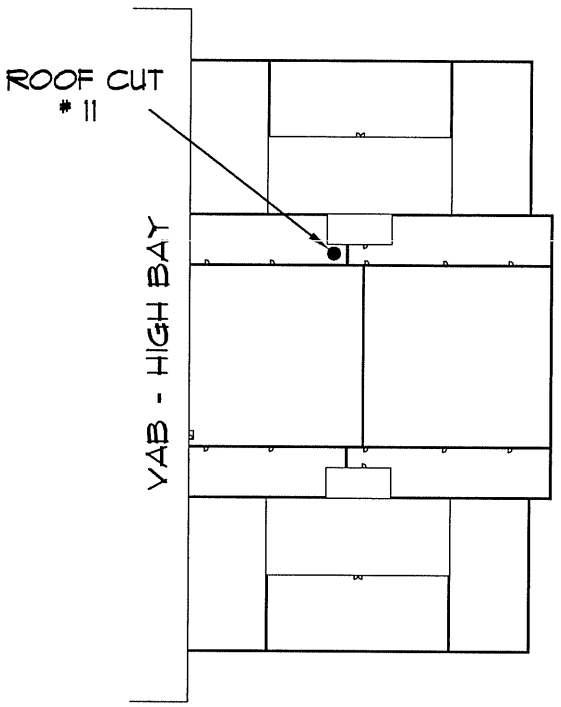

ROOF PLAN
NOT TO SCALE

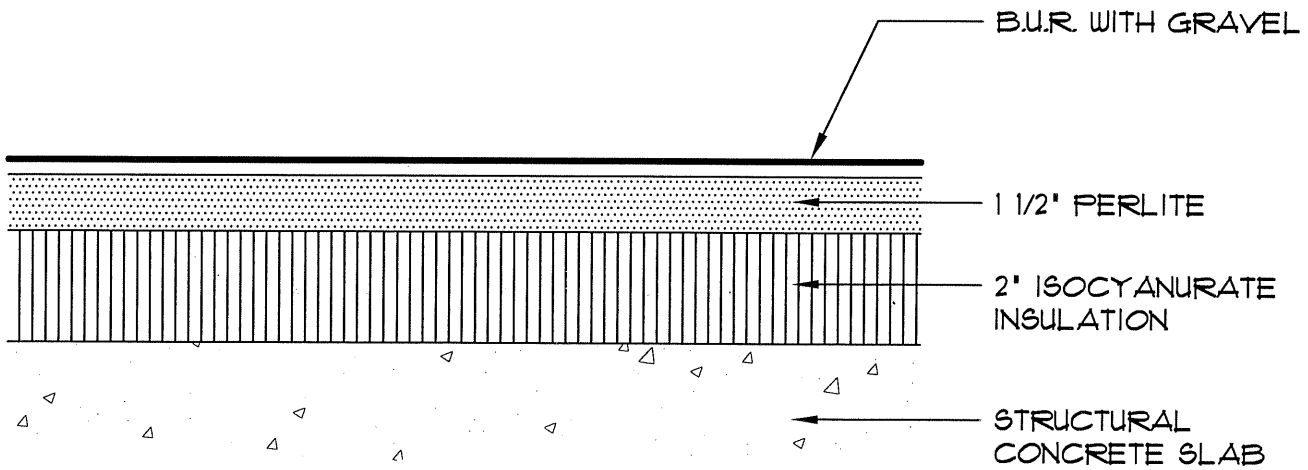

A/R/C Associates Incorporated

Architecture
Roof Consulting
Construction Technology

601 North Fern Creek Avenue
Suite 100 Orlando, FL.32803-4899
Tel. (407)896-7875 Fax. (407)898-6043

COPYRIGHT © 1997 A/R/C ASSOCIATES

ROOF CUT DATA

PROJECT NAME
NASA - VAB LOW BAY

PROJECT # 04028.02 DATE 3/25/05

ROOF CUT 12

ROOF AREA A/11

MEMBRANE : B.U.R. WITH GRAVEL

INSULATION : 1 1/2" PERLITE BOARD
ADHERED TO 2" ISOCYANURATE

DECK : STRUCTURAL CONCRETE SLAB

REMARKS :

TEST PULL : N/A

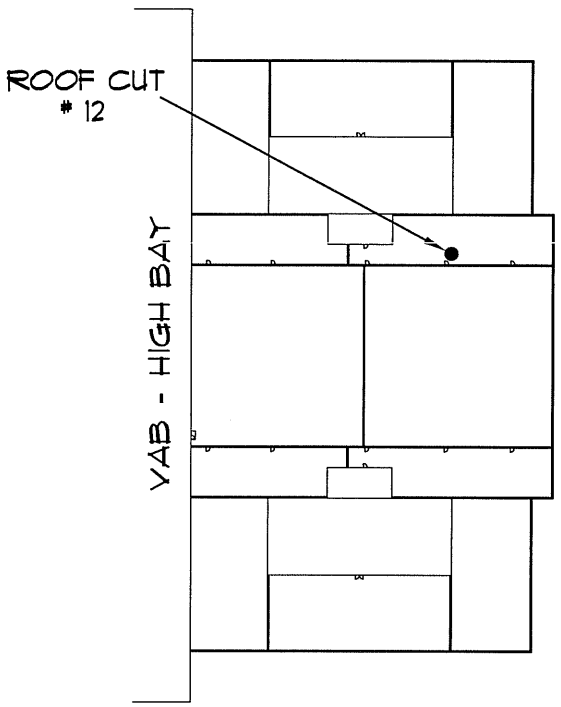

ROOF PLAN
NOT TO SCALE

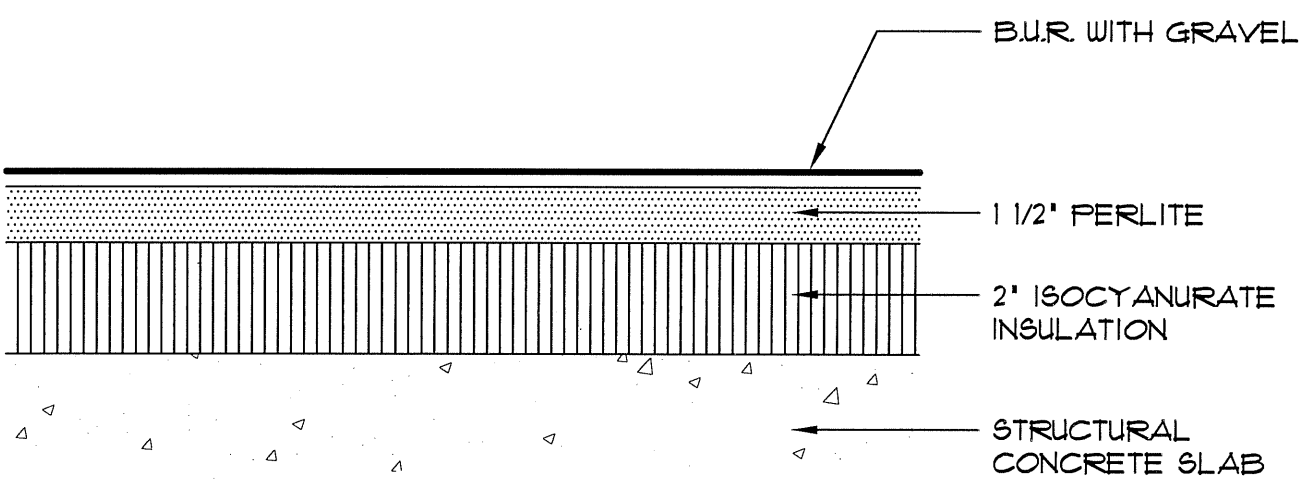

A/R/C Associates Incorporated

Architecture
Roof Consulting
Construction Technology

601 North Fern Creek Avenue
Suite 100 Orlando, FL.32803-4899
Tel. (407)896-7875 Fax. (407)898-6043

COPYRIGHT © 1997 A/R/C ASSOCIATES

ROOF CUT DATA

PROJECT NAME
NASA - VAB LOW BAY

PROJECT # 04028.02 DATE 3/25/05

ROOF CUT 13

ROOF AREA A/8

MEMBRANE : B.U.R. WITH GRAVEL

INSULATION : 2" PERLITE BOARD
ADHERED TO 4" ISOCYANURATE

DECK : STRUCTURAL CONCRETE SLAB

REMARKS : 2 ROOFS

TEST PULL : N/A

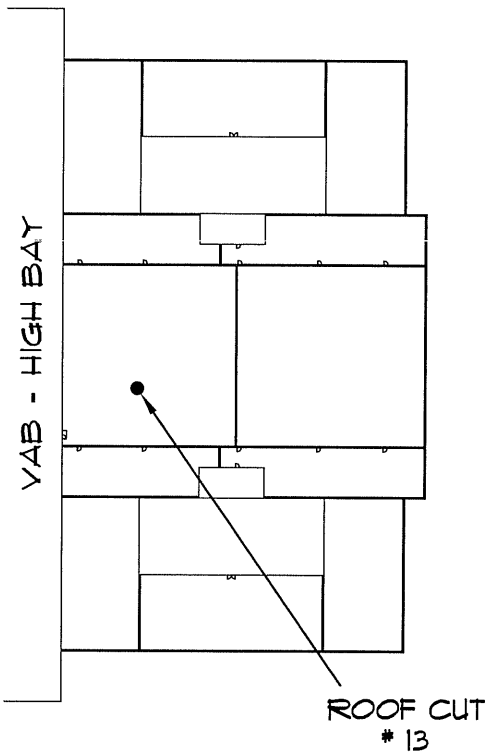

ROOF PLAN
NOT TO SCALE

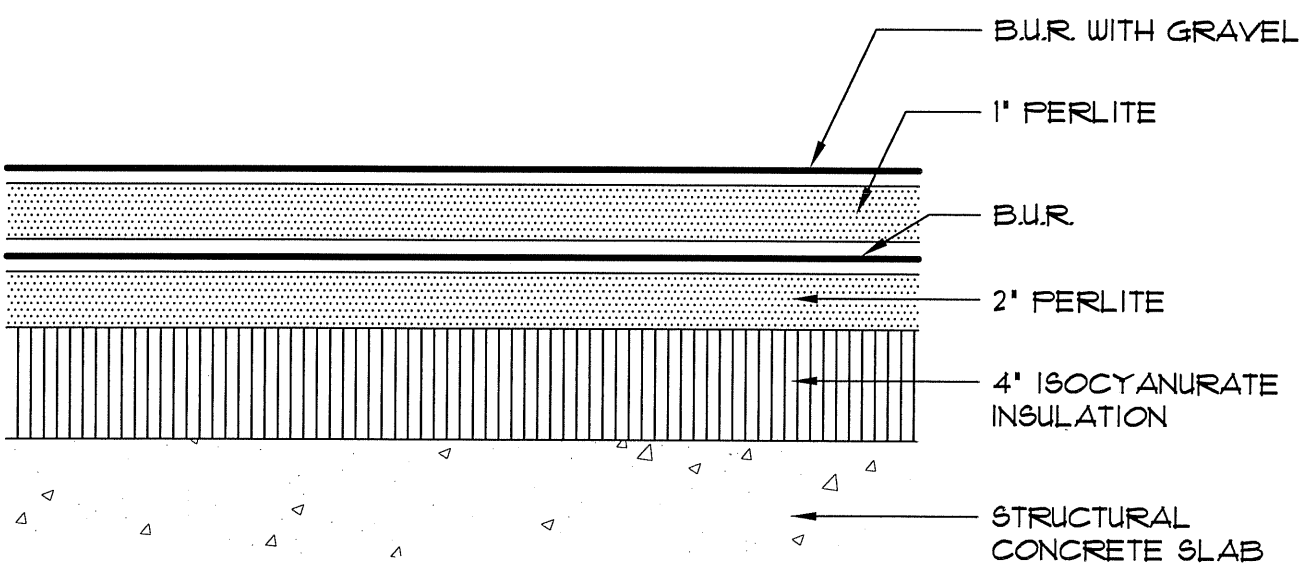

A/R/C Associates Incorporated

Architecture
Roof Consulting
Construction Technology

601 North Fern Creek Avenue
Suite 100 Orlando, FL.32803-4899
Tel. (407)896-7875 Fax. (407)898-6043

COPYRIGHT © 1997 A/R/C ASSOCIATES

ROOF CUT DATA

PROJECT NAME
NASA - VAB LOW BAY

PROJECT # 04028.02 DATE 3/25/05

ROOF CUT 14

ROOF AREA A/9

MEMBRANE : B.U.R. WITH GRAVEL

INSULATION : 1 3/4" PERLITE BOARD
ADHERED TO 4" ISOCYANURATE

DECK : STRUCTURAL CONCRETE SLAB

REMARKS : 2 ROOFS

TEST PULL : N/A

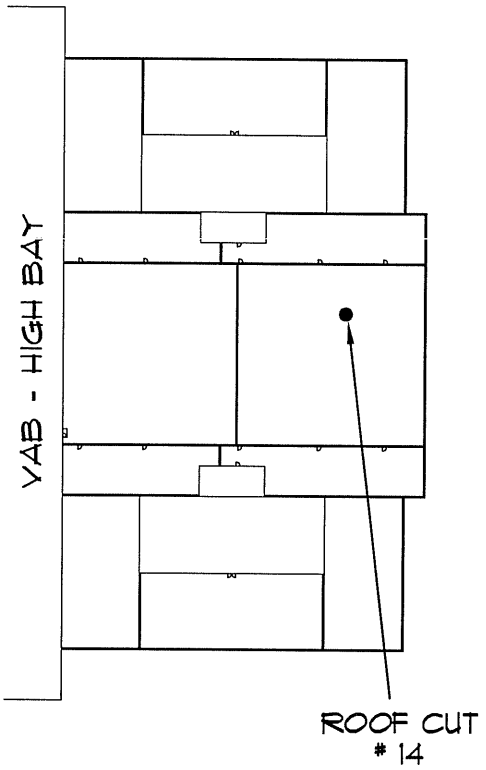

ROOF PLAN
NOT TO SCALE

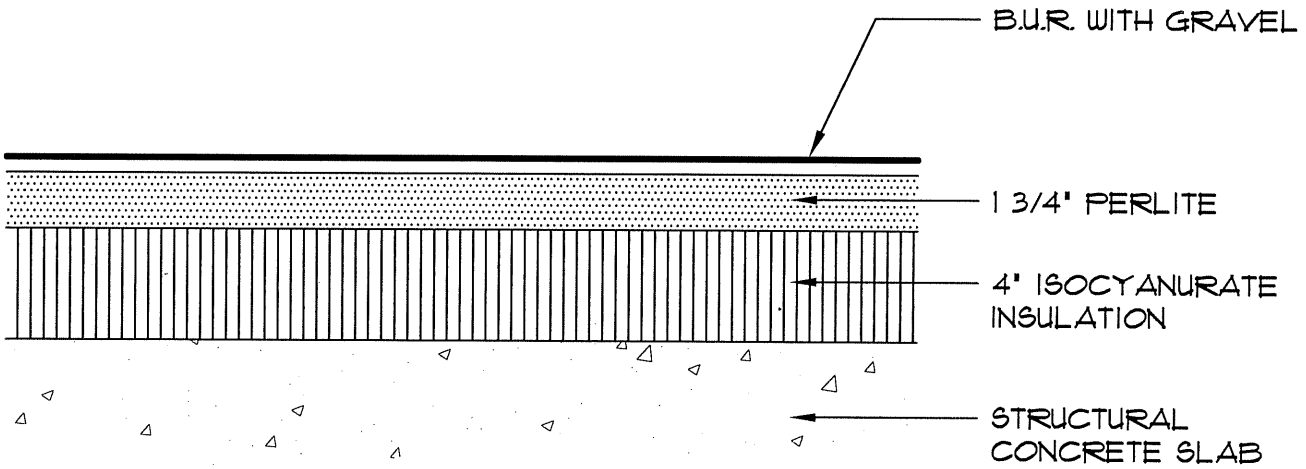

A/R/C
Associates
Incorporated

Architecture
Roof Consulting
Construction Technology

601 North Fern Creek Avenue
Suite 100 Orlando, FL.32803-4899
Tel. (407)896-7875 Fax. (407)898-6043
COPYRIGHT © 1997 A/R/C ASSOCIATES

ROOF CUT DATA

PROJECT NAME
NASA - UTILITY ANNEX

PROJECT # 04028.02 DATE 3/30/05

ROOF CUT 1

ROOF AREA A/1

MEMBRANE : 1/2" B.U.R. W/ GRAVEL

INSULATION : 1 3/4" FOAM GLASS INSULATION

DECK : STRUCTURAL CONCRETE SLAB

REMARKS : ROSIN PAPER BETWEEN PRELIM. ROOF AND INSULATION BD.

TEST PULL : N/A

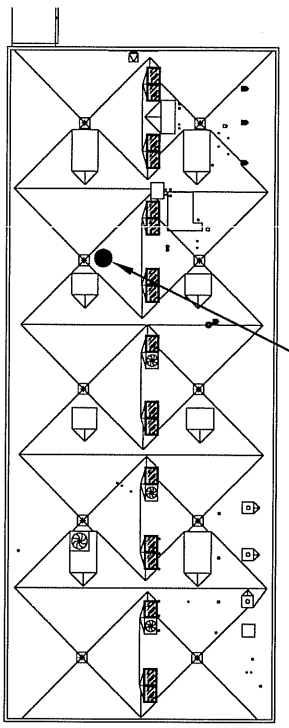

ROOF PLAN
NOT TO SCALE

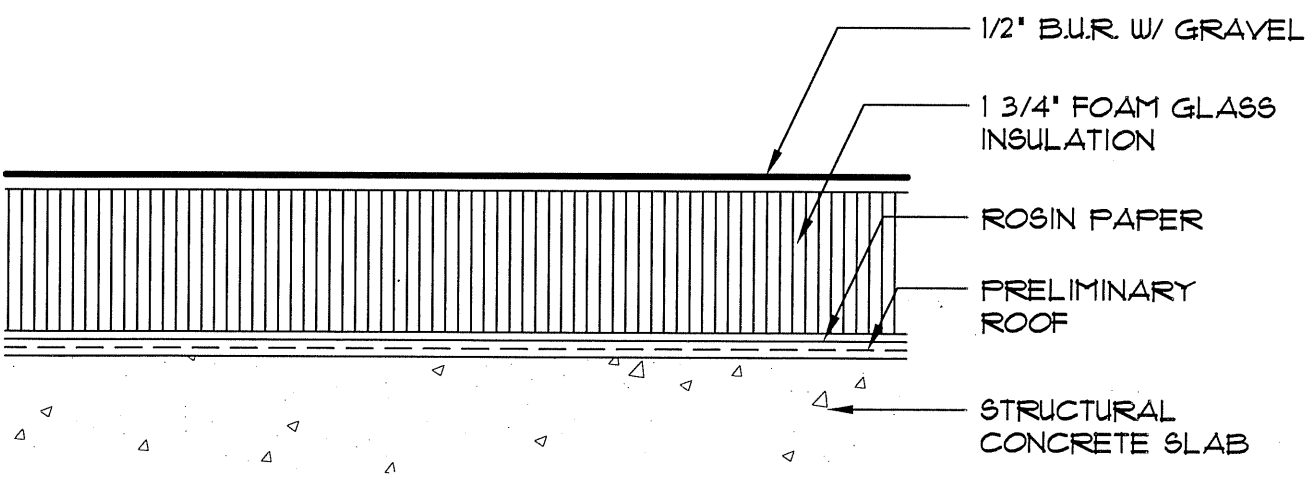

A/R/C
Associates
Incorporated

Architecture
Roof Consulting
Construction Technology

601 North Fern Creek Avenue
Suite 100 Orlando, FL.32803-4899
Tel. (407)896-7875 Fax. (407)898-6043
COPYRIGHT © 1997 A/R/C ASSOCIATES

ROOF CUT DATA

PROJECT NAME
NASA - UTILITY ANNEX

PROJECT # 04028.02 DATE 3/30/05

ROOF CUT 2

ROOF AREA A/1

MEMBRANE : 1/2" B.U.R. W/ GRAVEL

INSULATION : 3 1/4" FOAM GLASS
INSULATION

DECK : STRUCTURAL CONCRETE SLAB

REMARKS : ROSIN PAPER BETWEEN
PRELIM. ROOF AND INSULATION BD.

TEST PULL : N/A

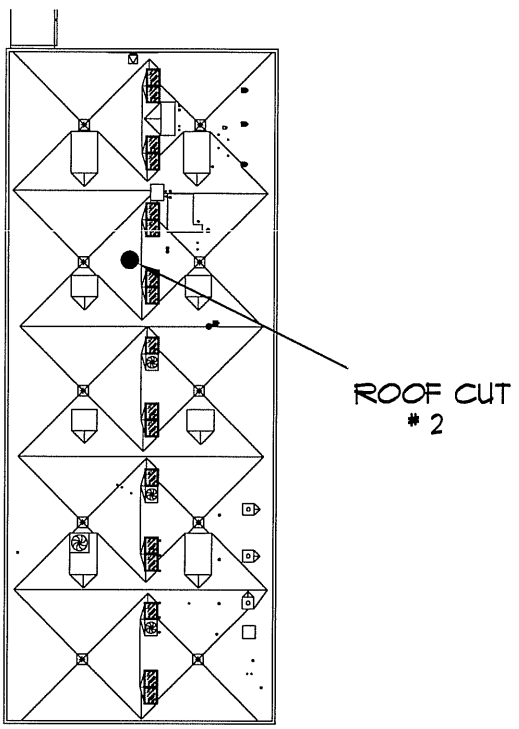
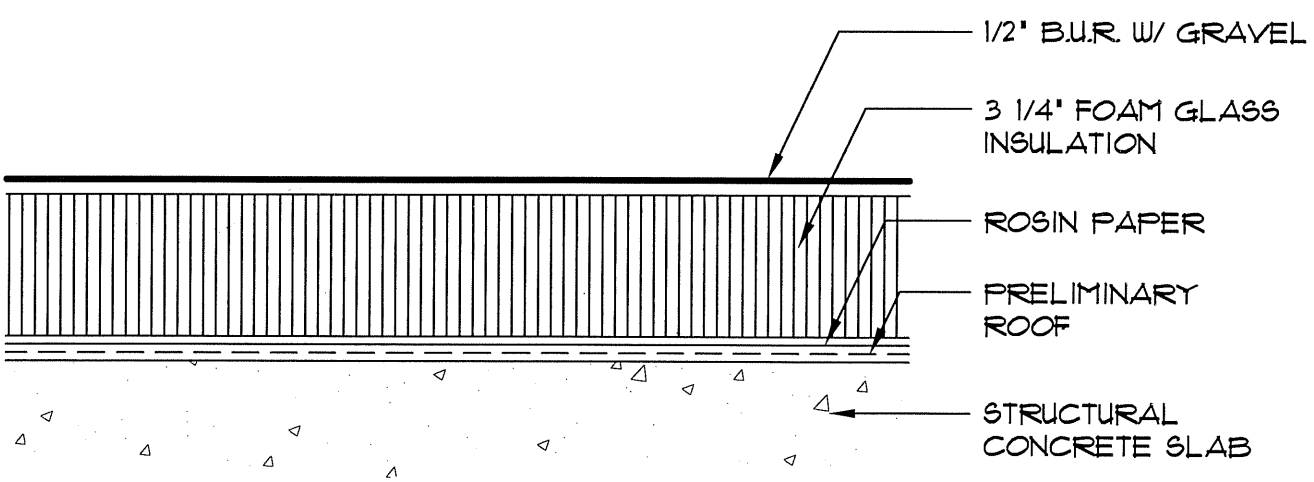
ROOF PLAN
NOT TO SCALE