NNK05106992R VAB Annex Detail P-A4.tif

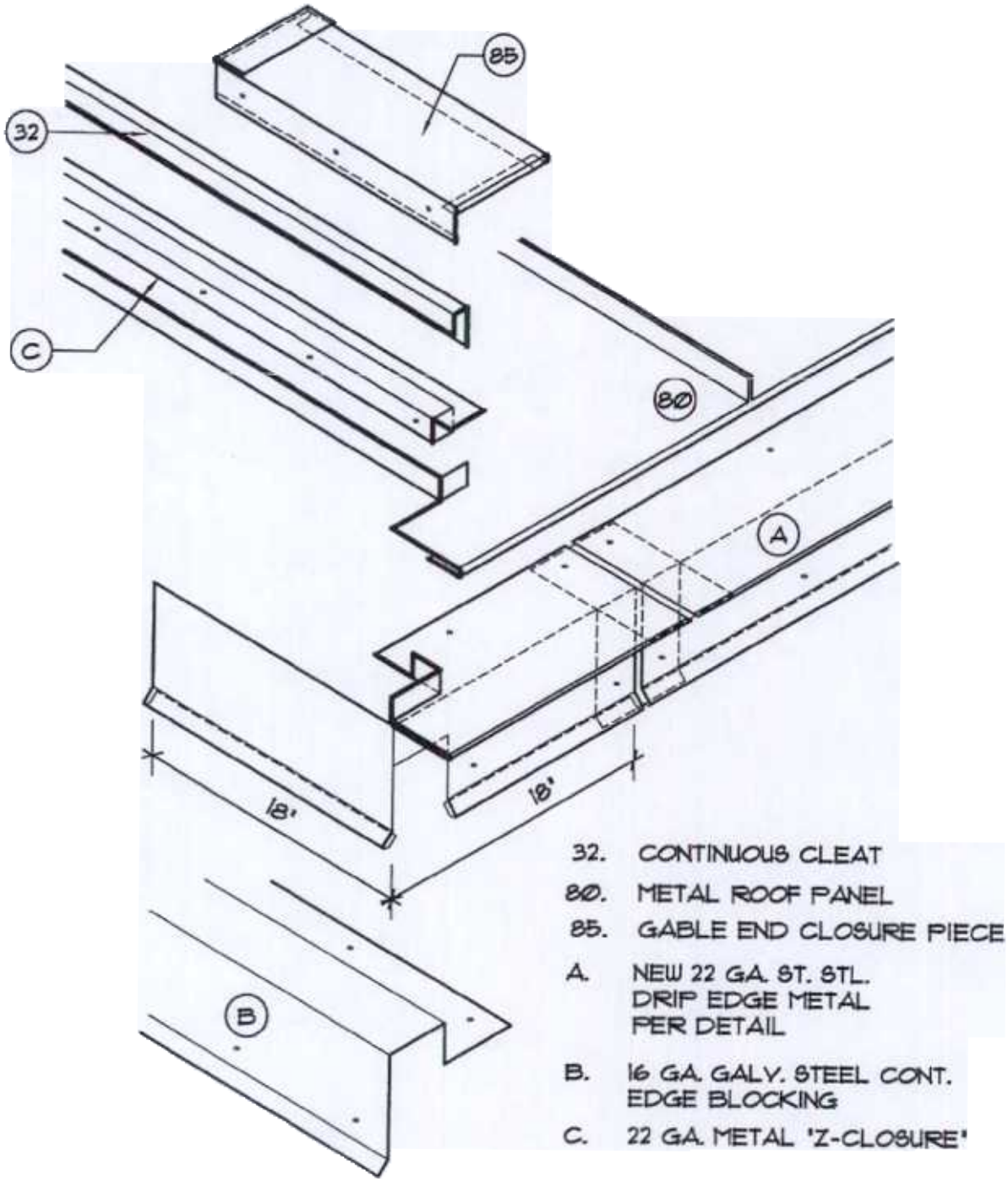

CORNER ASSEMBLY DETAIL

NO SCALE

P
A-4