This specification
Consists of 23 pages

TECHNICAL SPECIFICATION

FOR

10 KPSI HIGH PRESSURE IN-LINE GAS FILTERS

GF-10A4162-GN and GF-10A4163-GN

11FGK-GM05, REV. 1

Prepared By

NATIONAL AERONAUTICS AND SPACE ADMINISTRATION

JOHN C. STENNIS SPACE CENTER

SSC, MISSISSIPPI 39529

E-1 TEST FACILITY

11FGK-GM05, Rev. 1

ORIGINAL

Procure 10 KPSI High Pressure In-Line Gas Filters for E1
Revision Page

Rev	Page	Paragraph	Description	Approval
0	N/A	N/A	Baseline Specification. These filters are for the RP1 System being installed at E1	Originated By: **Larry deQuay, P.E.** **07/23/04** Reviewed By: **Tom Meredith** **07/27/04** Checked By: **M.P. Ferguson** **07/23/04** Approved By: **Lionel J. Dutreix** **07/27/04**
1	3	N/A	Change Appendices C and D to Appendices E and F respectively; Add Appendix C	Originated By: Laurence deQuay, P.E. 12/6/04 Reviewed By: Tom Meredith 12/14/04 Checked By: M.P. Ferguson 12/14/04 Approved By: Lionel J. Dutreix 12/14/04 ISSUED/CEF DEC 15 2004
	5	1st	Change Appendix B to Appendix C (two places)	
	5	2nd	Ref. Section 8.0, not 7.0, for performance testing	
	7	2nd	Change "buyer" to "NASA"	
	7	6th	Reword paragraph to state NASA will provide certified PTFE to vendor as needed and to state requirements when non-metallic materials other than PTFE are used in piece parts	
	8	4th	Add "that' after "Materials" in 3rd line, adjust appendix reference	
	8	5th	Insert "complete" before "spare set of softgoods"	
	9	1st	Reword 3rd and 4th sentences in paragraph stating when NASA provides Halocarbon ® grease with requirements	
	9	2nd	Change "two weeks" to "10 business days"	
	10	7th	Add "of" after "date" in 2nd line	
	11	1st	Delete submittals provided prior to award from list (to be part of Evaluation Criteria)	
	11	5th	Adjust reference list nos. for submittal copies also provided with delivered components	
	12	1st	New paragraph added	
	12	2nd	Rev. appendix reference, added "completed" before "RFI form"	
	16,17	N/A	Added Appendix C, tube connection detail	
	20,23	Bottom	Correct word errors	

TABLE OF CONTENTS

1.0 SCOPE

2.0 APPLICABLE DOCUMENTS

3.0 FILTER ASSEMBLY DESIGN REQUIREMENTS

4.0 FILTER ASSEMBLY MATERIALS

5.0 WELDING AND WELD INSPECTIONS

6.0 FILTER ASSEMBLY LUBRICANTS

7.0 CLEANING

8.0 TESTING

9.0 PACKAGING AND DELIVERY

10.0 OPERATIONS AND MAINTENANCE MANUALS

11.0 WARRANTY

12.0 SUBMITTALS

Appendix A: METALLIC MATERIALS APPROVED FOR WETTED APPLICATIONS

Appendix B: DATA SHEET

Appendix C: CONED AND THREADED TUBE FITTING FEMALE END CONNECTION DETAIL

Appendix D: TRANSMITTAL FORM AND INSTRUCTIONS

Appendix E: REQUEST FOR INFORMATION (RFI) FORM AND INSTRUCTIONS

1.0 SCOPE

This specification provides requirements for 10,000 psig rated in-line gas filters used in nitrogen service. Requirements herein shall govern design, material, fabrication, assembly, inspection, examination, testing, cleaning, packaging and delivery of the specified components. These filters may be used upstream of an oxygen system, therefore the wetted materials shall be oxygen compatible. The Government reserves the right to inspect any aspect of the fabrication and testing of these components.

2.0 APPLICABLE DOCUMENTS

Filter requirements shall comply with the latest edition of the following referenced publications unless shown or specified otherwise:

	NASA/SSC Standards and Specification Control Drawings Stennis Space Center SSC, Mississippi 39529-6000
NASA/SSC STD 8070-0089-FLUIDS	Facility Cleanliness Requirements for Propellants, Gas and Hydraulic Systems
NASA/SSC STD 79-010	SSC Requirements for Materials used in LOX/GOX Service
NASA/SSC DWG 54B00-GG00	Filters, High Pressure, Gas General
NASA/SSC DWG 54B00-GG01	Element, Filter, Gas General
NASA/SSC DWG 54000-GM30	Specifications for Materials used in LOX and GOX Service Exempt from Batch Test Requirements
NASA/SSC DWG 54000-GP11	Packaging and Preservation of Cleaned Components
	American Society of Mechanical Engineers (ASME) United Engineering Center New York, New York 10017 (212) 705-7722
ASME BPV Code	Boiler and Pressure Vessel Code Sections II, V, VIII, and IX (for pressure rating of pressure retaining parts less end-connections, weld filler wire, welding, weldments, weld procedure qualifications, and welder qualifications only)

ASME B31.3 Process Piping; ASME Code for Pressure Piping

American Society for Testing and Materials
100 Barr Harbor Dr.
W. Conshohocken, PA 19428-2959
(610) 832-9500 fax (610) 832-9555

ASTM G-86 Standard Test Method for Determining Ignition Sensitivity of Materials to Mechanical Impact in Pressurized Oxygen Environments

3.0 FILTER ASSEMBLY DESIGN REQUIREMENTS

The filter shall be designed, fabricated, and assembled in accordance with NASA/SSC Drawing 54B00-GG00 Latest Rev except as follows:

a.) Delete requirements for MS 29512 seal ring in sections 2 and 12
b.) Female Butech 9/16 M/P or Female Autoclave Engineers 9/16-inch Medium Pressure Slimline 20,000 psig rated Coned and Left Hand Threaded Connectors per Appendix C in place of MC-240 female straight thread connectors in sections 2 and 12 for drain and top vent ports
c.) Female Butech 1/4 M/P or Female Autoclave Engineers 1/4-inch Medium Pressure Slimline 20,000 psig rated Coned and Left Hand Threaded Connectors per Appendix C in place of MC-240 female straight thread connectors in sections 2 and 12 for differential pressure measurement ports
d.) Butech 9/16 M/P (Catalog No. 20G9-316) Gland, Butech 9/16 M/P (Catalog No. 20C9-316) Collar, and Butech 9/16 M/P (Catalog No. 20P9) Plug Fitting for each drain and top vent port in sections 2 and 12. Equivalent Autoclave Engineers or HIP hardware is also permitted.
e.) Butech 1/4 M/P (Catalog No. 20G4-316) Gland, Butech 1/4 M/P (Catalog No. 20C4-316) Collar, and Butech 1/4 M/P (Catalog No. 20P4) Plug Fitting for differential pressure measurement ports in sections 2 and 12. Equivalent Autoclave Engineers or HIP hardware is also permitted.

The element shall be built to NASA/SSC Drawing 54B00-GG01 Latest Revision with the exception of sections 6 and 13. The filter element shall be designed and fabricated to conform to performance and test requirements of section 8.0 and the individual filter assembly data sheet.

Pressure ratings for the components are specified on individual data sheets. The filter body/housing and all pressure containing parts of the filter assembly shall be designed and fabricated in accordance with the ASME Boiler and Pressure Vessel Code, Section VIII, Division 1 or 2, except that the pressure rating of end connections may conform to ANSI/ASME B31.3.

The filter assembly design shall incorporate the use of seals that assure all fluid media that flows through the filter assembly passes through the wire cloth of the filter element; i.e. no fluid leakage or flow around and bypassing the filter element wire cloth.

Each filter shall be designed to allow precision cleaning for LOX service. Design configuration of the filter assembly and it's piece parts shall enable pressurized spray flushing of or pressurized solvent flow over all internal surfaces wetted by service media. The design shall also enable complete gravity draining of cleaning solvents from all internal surfaces. All piece parts including the filter body shall also be free of cavities and enclosed void spaces where contaminants or cleaning solvents can be trapped and accumulate. Each filter shall be equipped with a low point drain port having an external Butech 9/16 M/P or 9/16-inch Autoclave Engineers Medium Pressure Slimline female connector with gland, collar, and plug fitting. This port shall be routed into the lower section of the filter body such that all liquid inside the filter body can be gravity drained with filter installed in a horizontal pipeline. Designs that cannot be readily cleaned by conventional cleaning methods are not acceptable.

Each filter shall be equipped with two differential pressure measurement ports with each port having an external Butech 1/4 M/P or 1/4-inch Autoclave Engineers Medium Pressure Slimline female connector with gland, collar, and plug fitting. One differential pressure measurement port shall be routed to the inlet side of the filter with the other port routed to the outlet side of the filter such that pressure drop across the filter element can be measured with a differential pressure gage. This gage with associated tubing and valves will be provided by others.

Each filter shall be designed and fabricated to enable complete filling of the entire internal volume of the filter with liquid and without entrapment of any vapor within the internal volute of the filter assembly. The addition of one high point vent port to provide this capability is permitted. The high point vent port, if provided, shall be routed to the upper part of the filter body and shall enable gas only pressurization and venting with liquid filling 95% or more of the internal volume of the filter assembly. The high point vent port, if provided, shall have an external Butech 9/16 M/P or 9/16-inch Autoclave Engineers Medium Pressure Slimline female connector with gland, collar, and plug fitting.

Filter design shall include features that prevent extrusion or blowout of seal and seal retainer materials under conditions of rapid (five second or less) depressurization of nitrogen gas from design pressure to zero (0) psig.

All internal surfaces of screens, hubs, and filters, wetted by service media, (except for wire cloth and wire mesh) shall be 128 RMS or smoother for proper precision cleaning.

Filter element design shall consider the use of a coarse wire mesh over the primary wire mesh as a means of protection against damage of the primary mesh during handling.

Conceptual drawings depicting the proposed filter design including the materials of construction shall be submitted to NASA for review prior to fabrication of parts to ensure compliance with the specification.

Final detail drawings are required as part of the final submittal package. The drawings shall include the following:

1. A detailed cut-away scaled drawing of the filter identifying all piece parts by description and part number. The materials of construction of all piece parts including their generic description and applicable specification shall also be included.
2. Pressure ratings, end connections, proof pressure, operating pressure, operating temperature, locator number, maximum pressure drop at maximum flow rate, and micron rating of the filter.
3. An overall drawing of the filter assembly depicting the envelope dimensions.

4.0 FILTER ASSEMBLY MATERIALS

All metallic materials exposed to the ambient external environment shall be corrosion resistant austenitic stainless steel, bronze, copper, nickel, iron-nickel, or nickel-copper alloys. The filter design shall incorporate features that prevent contact or provide electrical insulation between dissimilar metals where moisture is present or can accumulate. All metallic materials of construction and in contact with service media shall conform to requirements of Appendix A. Alternate metallic materials of construction not listed in Appendix A are subject to NASA approval and should be selected with consideration to fluid compatibility, suitability for design, interaction with other materials, and other factors which could affect the performance of the component. Paragraph F323 in Appendix F Precautionary Considerations from ASME B31.3 lists several material considerations that should be evaluated during material selection.

All pressure containing piece parts shall be machined forgings. No castings are permitted for any pressure containing part.

Certified material test reports (CMTR's) shall be provided for all metallic materials used in fabrication, including weld filler wire. Traceable heat numbers shall be provided for all forged materials.

All non-metallic wetted piece parts and lubricants used in the filter assembly shall be composed of materials which have passed mechanical impact testing in accordance with ASTM Test Method G86, Standard Test Method for Determining Ignition Sensitivity of Materials to Mechanical Impact in Pressurized Oxygen Environments, using 72 ft-lbs of energy, in LOX, at 8500 psig, and at the minimum use thickness. All non-metallic piece parts, except for lubricant used to assemble the filter assembly, shall be fully compatible with hydrogen at service temperatures that range from –100°F to +200°F. These parts must retain all required physical, chemical, and thermal properties required for intended function and application.

Where the vendor decides to use virgin polytetrafluoroethylene (PTFE) for service media wetted non-metallic piece parts, NASA will furnish batch tested virgin PTFE which the vendor may have compounded by a third party for use as stock for piece parts. If a non-metallic material other than PTFE is selected for any piece part wetted by service media, it shall be approved by NASA. Vendor shall provide design drawings that show and list all piece parts with part number, part material, and part description. Vendor shall also state, in pounds, the required

quantity of the PTFE powder required. NASA will be available to consult with the vendor to suggest additional materials for specific high pressure oxygen applications; however, NASA recommends the use of NASA provided polytetrafluoroethylene (PTFE) that has been previously certified in accordance with SSC Drawing 54000-GM30 whenever possible.

Vendor shall maintain lot/batch and impact testing certification for all non-metallic materials, including lubricants used for assembly of filters. Vendor shall provide copies of all non-metallic material certifications to the Government within two weeks after these certification records are obtained. Copies of these certifications shall also be included and shipped with the filters.

All requests for materials or material selection assistance from NASA are subject to review and approval by NASA.

Materials of construction which differ from the materials recommended on the individual data sheets require specific review and approval by the NASA Contracting Officer's Technical Representative. Materials that differ must be submitted on a Request for Information (RFI) form for approval (see Appendix E).

A complete spare set of softgoods shall be supplied for each filter ordered. The softgoods shall be packaged as a set and the packaging shall be marked in such a way that each softgood set is easily referenced to the filter for which it is supplied.

5.0 WELDING AND WELD INSPECTIONS

All welding and weldment inspections shall be in accordance with the ASME Boiler and Pressure Vessel Code, Sections VIII and IX. All weld filler wire shall have the same nominal chemical composition as the joined base metals and shall conform to Section II of the ASME Boiler and Pressure Vessel Code.

At least two weeks prior to the start of any welding, the vendor shall provide certified Weld Procedure Specifications (WPS's) and their supporting Procedure Qualification Records (PQR's) to the NASA Contracting Officer's Technical Representative, for review and approval. All WPS's and PQR's shall conform to the applicable ASME Boiler and Pressure Vessel Code Section IX requirements. Vendor is not required to submit qualifications (WPQ's) for individual welders performing the work, but these shall be made readily available to the NASA Contracting Officer upon request.

All pressure containing weldments shall be 100% radigraphically inspected where accessible in accordance with Sections V and IX of the ASME Boiler and Pressure Vessel Code. All weldments not accessible to radiographic inspection shall be 100% dye-penetrant inspected at the root and cover passes.

Vendor shall supply copies of all radiographic film produced during inspection of weldments. Reports of all weld inspection results shall be provided by the vendor to the NASA Contracting Officer's Technical Representative.

6.0 FILTER ASSEMBLY LUBRICANTS

Fluid lubricants and other fluids used to assemble the filter assembly after the final cleaning shall be certified for oxygen service to 10000 psig by batch testing in accordance with ASTM Test Method G-86. Krytox® 240AC grease is approved for use without batch testing by NASA/SSC Drawing 54000-GM30. If the vendor is not able to use the Krytox 240AC grease for assembly of parts, NASA will provide batch tested Halocarbon® grease for use during assembly of the components. However, the vendor is required to submit a written request to NASA for the grease, which includes volumetric quantity required. This request will be subject to review and approval by the NASA Contracting Officer's Technical Representative.

7.0 CLEANING

The filter assembly shall be cleaned to the appropriate cleanliness level identified on the Data Sheet in accordance with SSC STD 8070-0089-FLUIDS. The manufacturer shall submit a cleaning and verification procedure subject to approval by the NASA Contracting Officer's Technical Representative at least 10 business days before any work is performed. Individual cleanliness certification cards identifying the component locator number, serial number, and clean level are required for each component.

8.0 TESTING

8.1 Filter

All filter assembly testing shall be performed in accordance with NASA/SSC Drawing 54B00-GG00 Latest Rev. sections 18, 19, 20, and 21.

8.2 Element

All testing of filter elements shall be in accordance with NASA/SSC Drawing 54B00-GG01 Latest Rev. with the exception of sections 6 and 13. The filter elements shall be capable of withstanding the minimum differential pressure defined as "Element Collapse Pressure" across the filter element in either direction without collapsing or incurring any permanent deformations to the element supporting structures used to retain the wire cloth. Element Collapse Pressure is specified on the data sheet. Vendor shall perform an Element Collapse Pressure test or provide test results of a filter element of identical design to demonstrate that the filter element supporting structures, not including the wire cloth, will meet these requirements. Furthermore, the test shall validate that the wire cloth will not break, tear or yield in any fashion at the specified Element Collapse Pressure in both upstream to downstream directions across the element.

9.0 PACKAGING AND DELIVERY

All components cleaned to SSC STD 8070-0089-FLUIDS shall be packaged and preserved at its specified clean level in accordance with NASA/SSC Drawing 54000-GP11 Packaging and Preservation of Cleaned Components. All components shall be treated as LO/GO components with regards to packaging requirements (section 3.3).

All materials used for primary sealing shall be cleaned and maintained to at least the cleanliness levels of packaged components prior to use.

The manufacturer shall be responsible to prepare shipment of components to arrive undamaged with cleanliness intact.

10.0 OPERATIONS AND MAINTENANCE MANUALS

Operations and maintenance manuals shall be provided to fully describe and illustrate all procedural steps required to disassemble and reassemble each filter. Special notes and cautions required to prevent damage to piece parts during precision cleaning shall also be included in these procedures. Any special (non-standard) tools required for filter disassembly and reassembly shall be described in these procedures and shall also be provided as deliverables with the filters.

11.0 WARRANTY

The filter assembly furnished under this specification shall be new equipment purchased from the original equipment manufacturer or their authorized distributor.

The vendor shall supply a certificate of conformance with the filter assembly certifying that the filter assembly has met all of the requirements of this specification.

The filter furnished under this specification shall be guaranteed against defective materials, design, and workmanship for a period of one year from the date of installation or a total of eighteen months from date of acceptance. Upon the receipt of notice from the Government of failure of any part of the guaranteed equipment during the guaranty period, new replacement parts shall be furnished and installed promptly by the supplier at no additional cost to the Government. The supplier shall acknowledge his responsibility under these guarantee provisions by letter, stating that the shipment and materials referred to herein are guaranteed and the inclusive dates of the guaranty period.

12.0 SUBMITTALS

The following submittals are required as part of this specification:

1. Deliverables with bid/proposal/offer prior to contract award as specified in the contract solicitation evaluation criteria.
2. Requests for Government furnished non-metallic materials as described in section 4.0.
3. CMTR's for all metallic materials including weld filler metal/wire.
4. Certification records for non-metallic materials as described in section 4.0.
5. Requests for materials or materials selection assistance from NASA as described in section 4.0.
6. WPS's and supporting PQR's for all weldments per section 5.0.
7. All radiographic and dye-penetrant inspection reports and films per section 5.0 within three weeks after completion of weld inspections.
8. Cleaning and verification procedures in accordance with section 7.0.
9. Cleanliness certification records in accordance with section 7.0.
10. Test procedures in accordance with section 8.0.
11. Test reports documenting the results of tests described in section 8.0.
12. Packaging procedures as described in section 9.0.
13. Operation and maintenance manuals as described in section 10.0 shall be provided with delivery of filter assemblies.
14. All required non-standard special tools needed for filter assembly and disassembly per section 10.0 shall be provided with delivery of filter assemblies.
15. Certificates of conformance as described in section 11.0.

A vendor that commences work without a NASA review to ensure compliance of the submittal with the specification assumes all risks associated with rework, delay and other effects resulting from a nonconforming article should a subsequent review reveal that the vendor's submittal did not comply with the requirements of the specification.

The submittals, when appropriate, may be submitted in electronic form. Electronic files shall be readable with Adobe Acrobat, or other pre-approved software. Three (3) hard copies of each submittal are required.

Submittals must be accompanied by a Contractor Transmittal Sheet (Attached in Appendix D). A transmittal sheet is required for all technical information submitted. Technical information shall be sent to:

Configuration Coordinator
Building 1100, Room 3017A
Stennis Space Center, MS 39529-6000

Technical information required by submittal items 7, 9, and 11 above shall also be provided with delivered hardware in the same shipping container.

Unless otherwise specified the vendor shall ensure that their submittals are received by NASA a minimum of 10 business days prior to the start of work governed by the respective submittal. This will enable NASA to review the submittal to ensure compliance with the requirements of the specification and to provide feedback to the contractor in a timely fashion. In the absence of any problems arising from the content of the submittals, NASA will disposition submittals within 10 business days from receipt.

All vendor requests for information shall be submitted in writing using the Request For Information (RFI) form as shown in Appendix E. Supplemental attachments can and should be used with the RFI form to convey accurate and complete information as needed. The completed RFI form shall also be sent to the Configuration Coordinator.

APPENDIX A: METALLIC MATERIALS APPROVED FOR WETTED APPLICATIONS

All ferrous alloy piece parts exposed to service medium shall be restricted to the following materials:

1. Type 304*, 304L, 316*, 316L, 321, or 347 austenitic stainless steel

2. Nitronic 40 austenitic stainless steel (alternate designations: Alloy 21-6-9, ASTM XM-11, UNS S21904)

3. Nitronic 50* austenitic stainless steel (alternate designation: Alloy 22-13-5, ASTM XM-19, UNS S20910)

4. Type A-286* austenitic stainless steel

All pressure retaining parts shall be restricted to the following materials (and conditions where applicable):

1. Type 304*, 304L, 316*, 316L, 321, or 347 austenitic stainless steel

2. Type A-286* austenitic stainless steel

3. Nitronic 40 austenitic stainless steel (alternate designations: Alloy 21-6-9, ASTM XM-11, UNS S21904)

4. Nitronic 50* austenitic stainless steel (alternate designation: Alloy 22-13-5, ASTM XM-19, UNS S20910)

5. Inconel 625

6. Inconel 718

7. Monel 400

8. Monel K-500

*Types 304, 316, Nitronic 50, and A286 stainless steels are not to be used in welded constructions.

Additional materials shall be allowed upon specific written approval by the NASA Contracting Officer’s Technical Representative.

APPENDIX B

DATA SHEET

FILTER DATA SHEET # GF-10A4162-GN AND # GF-10A4163-GN

TYPE	GAS FILTER – IN-LINE TYPE, WITH INLET & OUTLET ON COMMON CENTERLINE. THE FILTER(S) SHALL BE MOUNTED VERTICALLY WITH THE FLOW DOWNWARD.
FLUID	GASEOUS NITROGEN
FILTRATION LEVEL (MICRONS):	
NOMINAL	*
ABSOLUTE	804
DESIGN PRESSURE (PSIG)	10,000
DESIGN TEMPERATURE (F)	-320 TO +100
DESIGN FLOW (SCFM)	527,000 (650 LBM/SEC)
OPERATING PRESSURE DROP	* 300 PSID MAXIMUM ALLOWED W/ 8000 PSIA, 110° F GN @ DESIGN FLOW
CLEAN (MIN.) PSI	*
DIRTY (MAX.) PSI	*
ELEMENT COLLAPSE PRESSURE (PSID)	1,500 PSID MINIMUM
UNIT BURST PRESSURE (PSIG)	*
MEDIUM USED FOR TESTING	*
ELEMENT FILTERING AREA (SQ. IN.)	*
CONNECTIONS:	
SIZE	INLET 8” ACK1 PIPE; OUTLET 6” ACK1 PIPE
TYPE	INLET: REFLANGE R-CON P/N F12-081.823 W/ S4855 SEAL RING OUTLET: REFLANGE R-CON P/N F08-061.400 W/ S3875 SEAL RING
END-TO-END	36”
GASKET MATERIAL	SILVER COATED 17-4 PH STAINLESS STEEL
ELEMENT MATERIAL	TYPE 304L, OR 316L S/S RETAINER RING, SUPPORTS AND WIRE MESH (RIGIMESH, DUTCH TWILL WEAVE, OR PLAIN SQUARE WEAVE)
HOUSING MATERIAL	ASTM A182 AND ASTM A312 (SEAMLESS ONLY) STAINLESS STEEL, TYPE 304/304L OR 316/316L DUAL-RATED
** ELEMENT GASKET MATERIAL	TFE OR PTFE COATED TYPE 304L OR 316L CORROSION RESISTANT STAINLESS STEEL
MANUFACTURER	ERBE OR EQUAL
MODEL OR FIG. NO.	
P&ID NUMBER	PSK-E1-2003-FAC SHEET 1
REMARKS	CLEAN PER NASA/SSC SSTD-8070-0089-FLUIDS TO LEVEL 1X
	* ITEMS TO BE FILLED IN BY MANUFACTURER
NO. OF FILTERS / STRAINERS	2
FILTER/STRAINER TAG NUMBERS:	GF-10A4162-GN GF-10A4163-GN

* ITEMS TO BE FILLED IN BY MANUFACTURER

APPENDIX C

CONED AND THREADED TUBE FITTING FEMALE END CONNECTION DETAIL

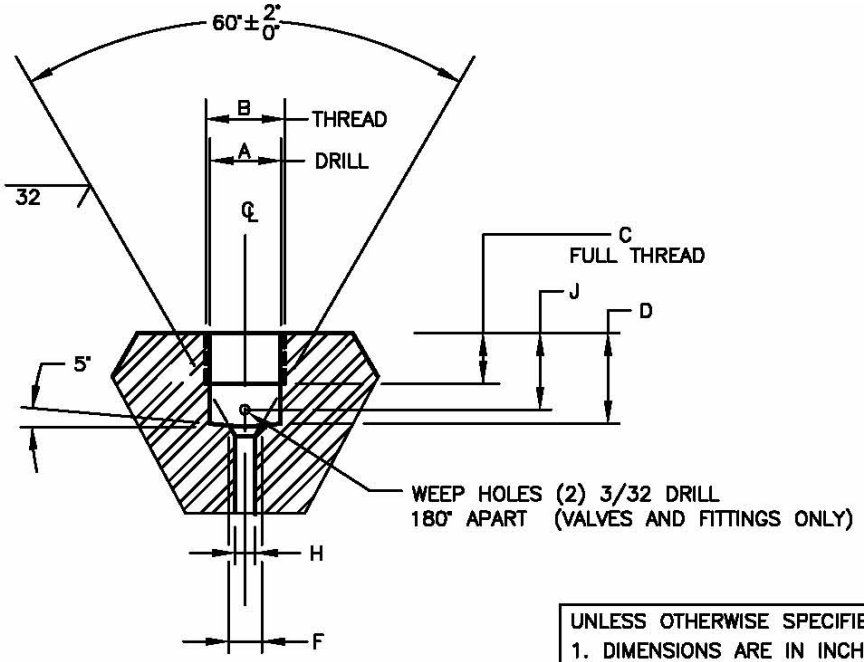

UNLESS OTHERWISE SPECIFIED 1. DIMENSIONS ARE IN INCHES 2. DIMENSIONAL TOLERANCES AS FOLLOWS:		
TYPICAL DIMENSIONS	TOLERANCES	SURFACE FINISH
0.0	±0.060	32
0.00	±0.030	32
0.000	±0.015	32
ANGLES: ± 2°		
BREAK CORNERS 0.015 MAX. R. OR CHAM.		
FILLETS: 0.015 TO 0.030 R.		
CHAMFER THREADS 45° TO ROOT DIA. ON 1/4 THREAD SIZE AND LARGER		

TUBE O.D. INCHES	CONNECTION TYPE	DIMENSION (INCHES)						
		A	B	C	D	F	H	J
1/4	SF250CX20	25/64	7/16–20 UNIFIED CLASS 2B	0.28	0.500	0.188	0.109	0.406
3/8	SF375CX20	33/64	9/16–18 UNIFIED CLASS 2B	0.38	0.625	0.312	0.203	0.500
9/16	SF562CX20	3/4	13/16–16 UNIFIED CLASS 2B	0.44	0.750	0.500	0.359	0.656
3/4	SF750CX20	$0.953 \pm {}^{.010}_{.000}$	3/4–14 NPSM	0.50	0.938	0.625	0.516	0.781
1	SF1000CX20	$1.285 \pm {}^{.010}_{.000}$	1 3/8–12 UNIFIED CLASS 2B	0.81	1.312	0.875	0.688	1.125

20,000 PSI RATED CONED & THREADED TUBE FITTING FEMALE END CONNECTION DETAILS

APPENDIX D

CONTRACTOR TRANSMITTAL SHEET AND INSTRUCTIONS

National Aeronautics and Space Administration
John C. Stennis Space Center
Stennis Space Center, MS 39529-6000

CONTRACTOR TRANSMITTAL SHEET

DATE

SHEET OF

SECTION I - REQUEST FOR APPROVAL *(To be Initiated by the Contractor)*

TRANSMITTAL OF SHOP DRAWINGS, EQUIPMENT DATA, MATERIAL SAMPLES, OR MANUFACTURER'S CERTIFICATES OF COMPLIANCE
(See Instructions on Reverse)

CONTRACT NO.

☐ NEW SUBMITTAL
☐ RESUBMITTAL

TO	FROM	PREVIOUS TRANSMITTAL NO. *(If Any)*	TRANSMITTAL NO.

SPECIFICATION SECTION NO. *(Cover Only One Section With Each Transmittal)*	PROJECT TITLE AND LOCATION

ITEM NO. (a)	DESCRIPTION OF ITEM SUBMITTED (Type, Size, Model Number, etc.) (b)	MANUFACTURER OR CONTRACTOR CATALOGUE, CURVE DRAWING, OR BROCHURE NO. *(See Instruction No. 8)* (c)	NO. OF COPIES (d)	CONTRACT REFERENCE DOCUMENT		VARIATION (See Instruction No. 6) (g)	ACTION CODE *(See Instruction No. 9)* (h)
				SPECIFICATION PARAGRAPH NO. (e)	DRAWING SHEET NO. (f)		

REMARKS

I certify that the above submitted items have been reviewed in detail and are correct and in strict conformance with the contract drawings and specifications, except as stated.

NAME AND SIGNATURE OF CONTRACTOR

SECTION II - APPROVAL ACTION

ENCLOSURES RETURNED *(List by Item No.)*	NAME, TITLE, AND SIGNATURE OF APPROVING AUTHORITY	DATE

Contractor Transmittal Instructions

All transmittals should be given to Configuration Coordinator 228-688-3944 (phone), 228-688-1481 (fax) or delivered to B.1100 Room 3017A.

Be sure to provide the correct number of copies with your transmittal per specifications. All transmittals shall be numbered starting with 001 (Block I) and numbered consecutively. If a transmittal is resubmitted (Block J), it should be given the same number with an Alpha character (17A) and shown as a resubmittal (Block N), be sure to list the correct number under previous transmittal number (Block J).. It should NOT be given a new number.

On every transmittal sheet be sure to put the correct specification number (Block K). The specification number and section shall be written in the specification section block along with the correction section number. Please put paragraph numbers (Block E) per specification.

Project Title and Location (Block L). Be sure to put the correct EMI number and title in this location.

Item Number (Block A) list items by number 1, 2, 3, etc. Do not lump more than one item on a line.
Description (Block B) of what it is that you are submitting
Mfg or Contractor Catalogue, Curve Drawing, or Brochure No. (Block C), this is the name of the company whose information you are submitting.
No. of Copies (Block D), the number of copies you are submitting, per contract.
Specification Paragraph No. (Block E), the paragraph this information is applicable to in the specification.
Drawing Sheet No. (Block F), this is to be filled out when the information you are providing is located on a drawing.
Variation (Block G), this is only to be filled out when you are not providing what is required in the specification/drawing. This shows you are deviating from the specification/drawing. If you are deviating from a specification or drawing you must indicate whether there is a cost/schedule change associated with this change. Be sure to sign (Block P).
Action Code (Block H), this will be filled out by the CC when the transmittal is returned to the Contractor.
Contract NO. (Block M), this is the number given by the AMO for the actual contract (not the request for offer (RFO) number).
New submittal/resubmittal (Block N), if this is a new submittal, the new submittal box should be checked, if this is a resubmittal this box should be checked. If the resubmittal box is check, be sure you have filled in Block J appropriately.

Transmittals will be returned to the Contractor if this information is not filled in properly.

NOTE: ** "ANY COMMENT(S) THAT RESULT IN A CHANGE TO THE CONTRACT COST, SCOPE, OR SCHEDULE YOU MUST NOTIFY THE CONTRACTING OFFICER FOR APPROVAL PRIOR TO IMPLEMENTATION BEFORE ANY COSTS ARE INCURRED."

APPENDIX E

REQUEST FOR INFORMATION

National Aeronautics and
Space Administration
John C. Stennis Space Center
Stennis Space Center, MS 39529-6000

REQUEST FOR INFORMATION

(Implemented by SOI-8040-0001-FACENG)

Request For Information (RFI) Number

Date	Requestor	Contract

Question:

Answer:

SSC-781 (10/2004) Previous editions are obsolete. (MS Word 2002) C.G. (10/2004) pc

See Reverse for instructions

REQUEST FOR INFORMATION *(Continued)*

(Implemented by SOI-8040-0001-FACENG)

Request for Information (RFI) Instructions

All Request For Information (RFI) Forms should be given to the appropriate Configuration Coordinator.

Request For Information is an easy way to send questions and receive answers within a 24 to 48 hour period.

RFIs shall be numbered consecutively, by using the contract number the sequential numbering. If you are resubmitting information from a previously RFI then use the same RFI number and add a letter behind it. Example: Resubmit RFI 017 now will be RFI 017A.

RFIs shall not result in a cost or schedule impact to the contract.

NOTE: ** "ANY COMMENT(S) THAT RESULT IN A CHANGE TO THE CONTRACT COST, SCOPE, OR SCHEDULE YOU MUST NOTIFY THE CONTRACTING OFFICER FOR APPROVAL PRIOR TO IMPLEMENTATION BEFORE ANY COSTS ARE INCURRED."

SSC-781 (10/2004) (Reverse) Previous editions are obsolete. (MS Word 2002) C.G. (10/2004) pc