Vapor Compression Heat Pump: Overview

- Heat pumps take heat from a cool place and reject it to a hotter environment, which opposes natural heat transfer. Heat pump technology will enable missions to Lunar locations where warm environments exist, as well as fulfilling specific needs such as freezing science samples.

- A 'Ground-Test' Vapor Compression Heat Pump has been developed by NASA Johnson Space Center and is designed to run off of a DC power supply or directly from solar PV panels.

- A test of this heat pump with internal thermal control system (ITCS) and external thermal control system (ETCS) simulators [pumped water loops] is planned for 2005.

- Future modifications to this heat pump will involve testing various compressor and system improvements to create a 'Gravity-Independent' prototype system.

Heat Pump Test Location

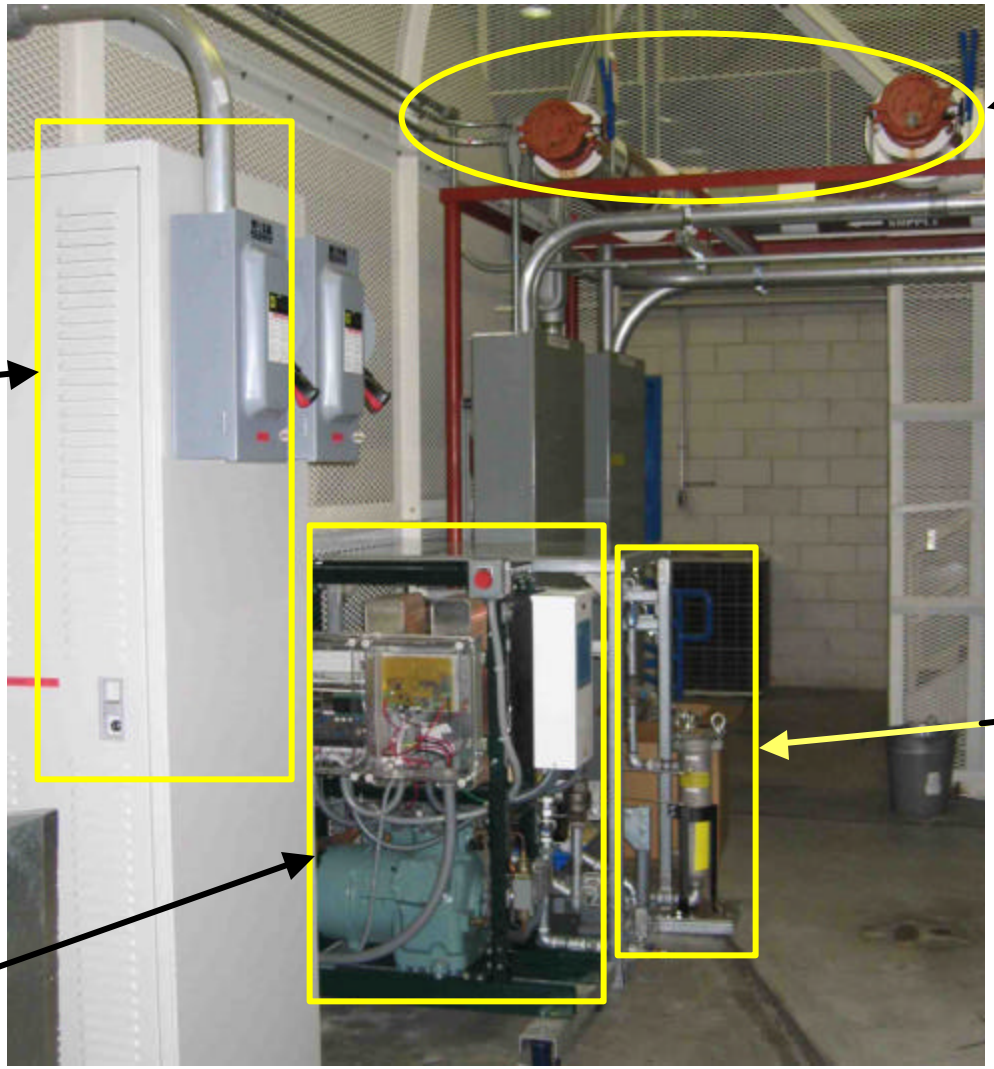

Vapor Compression Heat Pump

Vapor Compression Heat Pump Heat Exchangers

Vapor Compression Heat Pump Compressor

Vapor Compression Heat Pump Specifications

- 5 to 15 kW cooling capacity
- Control ITCS from 2°C to 10°C +/- 2°C
- Reject ITCS heat to ETCS, max lift 50°C
- Smooth transition from morning to mid-day (increasing lift)
- Vapor compression/non-CFC
- <1 cubic meter volume
- Remote on/off and set-point control

Vapor Compression Heat Pump Design

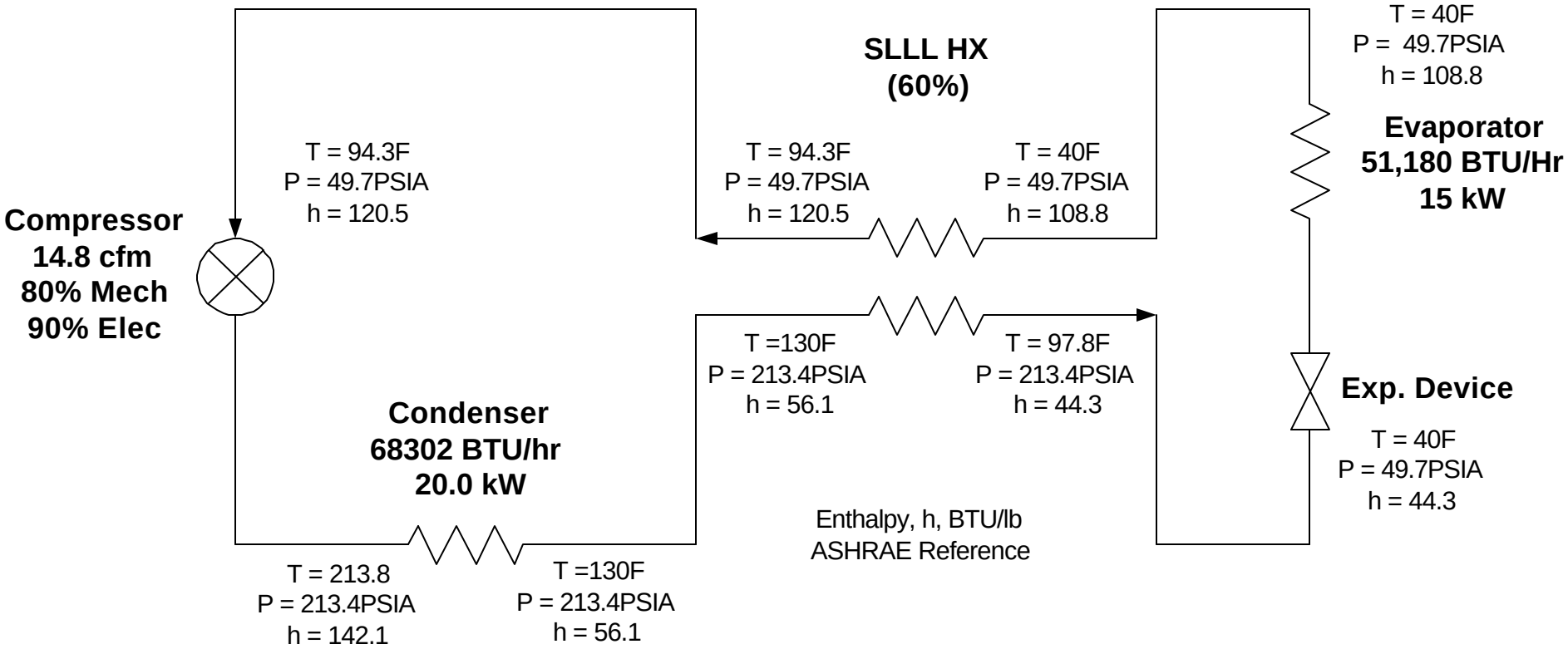

Mass Flow = 794.0 lb/hr
Work = 5018 W
Q = 15,000 W
Carnot COP = 5.0
System COP = 2.99 (60%)

Vapor Compression Heat Pump HX Parameters

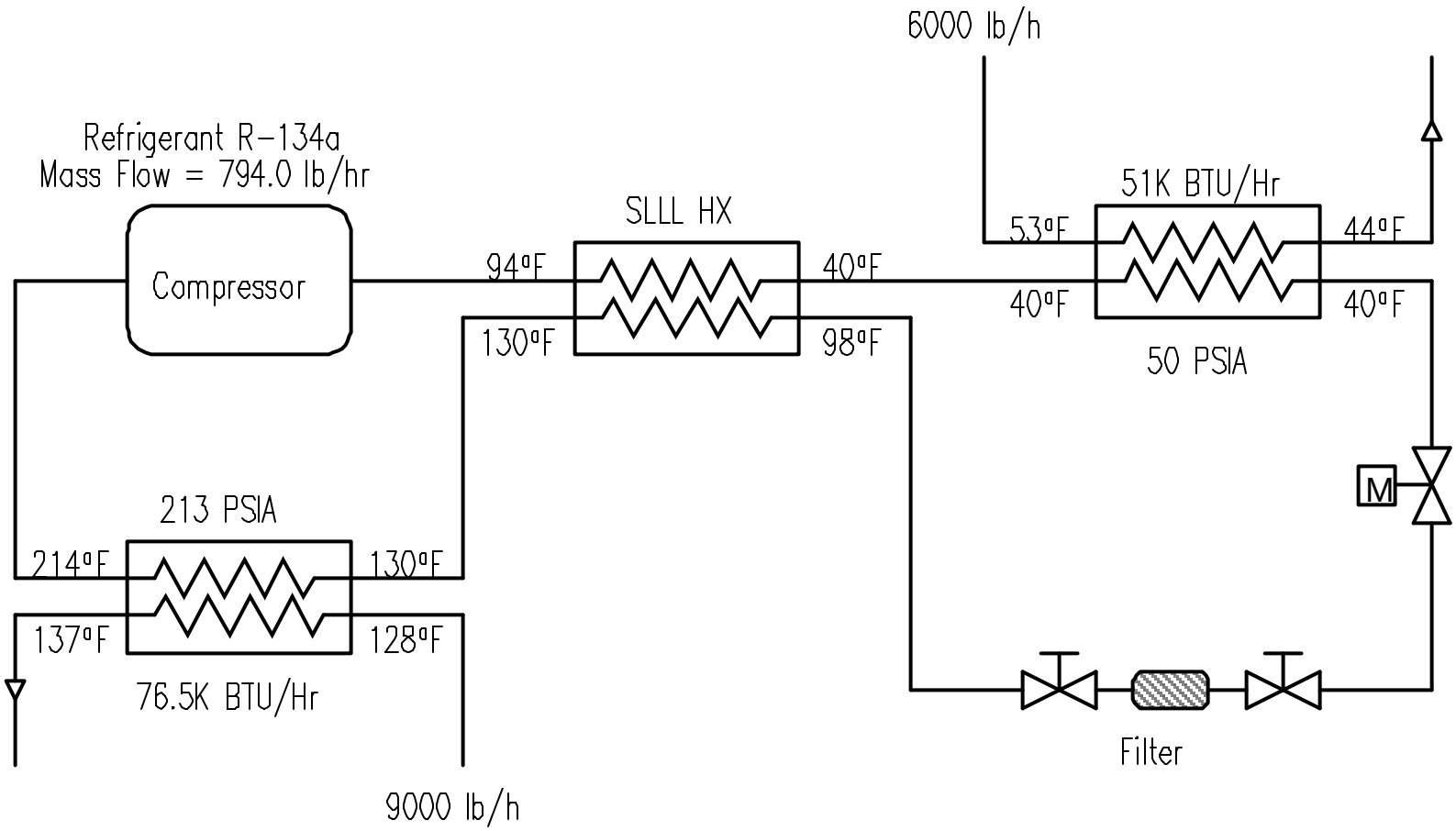

Refrigeration System Design

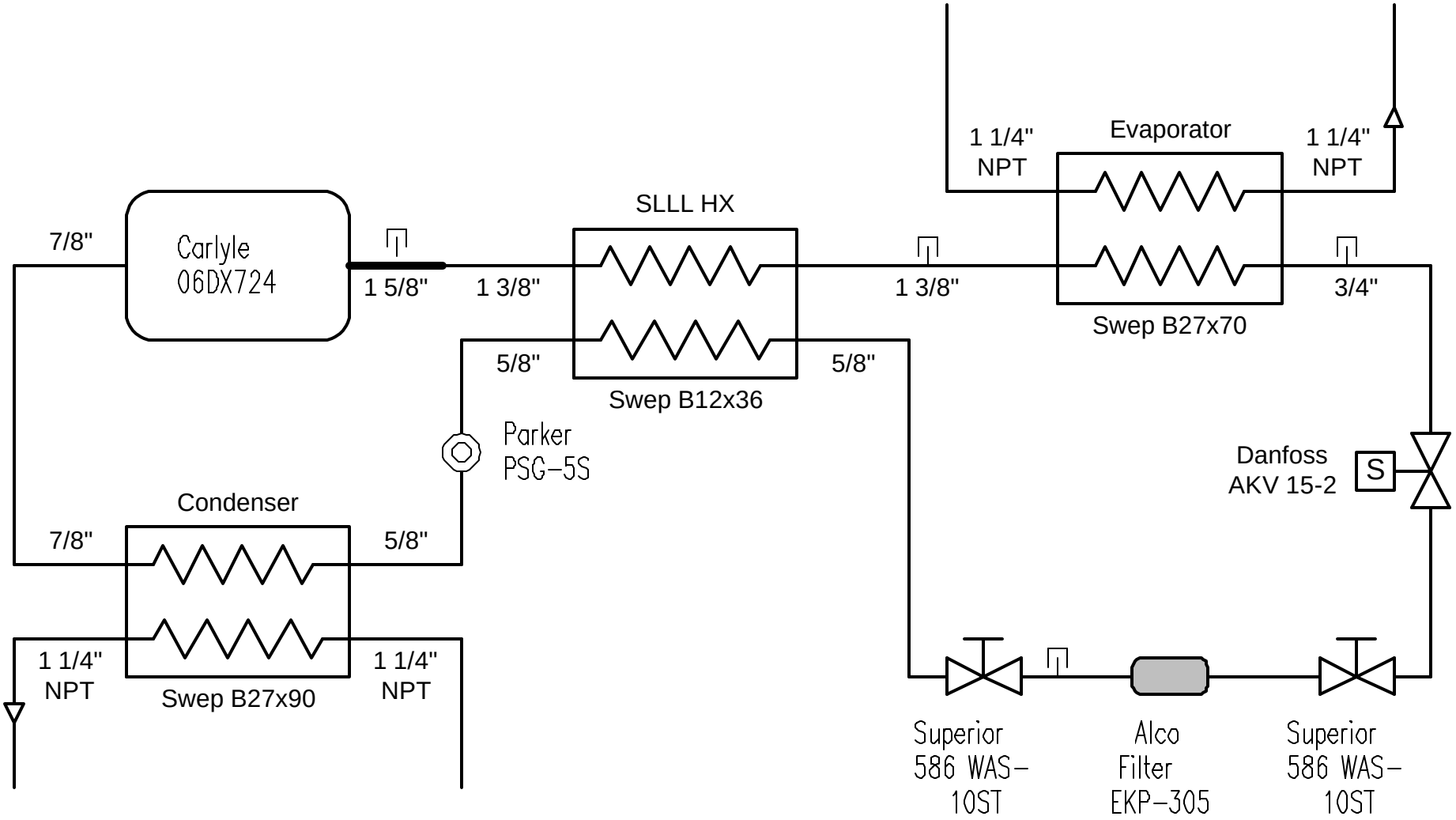

Compressor Specifications

Carlyle Semi-Hermetic Compressor

- Model 06DR724
- 6 Cylinder Reciprocating Compressor
- 6.5 Hp, 3-Phase Induction Motor

- Nominal Speed 1740 rpm
- 23.9 CFM Displacement
- 17.9 kW @ 35F/125F
- Speed Range: 20 to 60 Hz (3:1)
- 2 or 4 Cylinder Off-Loading Capability
- Weight 127 kg
- Offers Good Engineering and Maintenance Flexibility
- Lubrication depends on gravity

Condenser Specifications

- Swep B27-90
- Brazed Plate HX
- 90 Channels
- 4.8 Deg C LMTD
- 23 kg Dry
- 33.2 kg Wet
- R-134a ΔP = 0.4 PSI
- Surface Area: 56.8 sq.ft.
- R-134a Capacity: 1.3 Gal
- Water ΔP = 0.9 PSI

Evaporator Specifications

- Swep B27-70
- Brazed Plate HX
- 70 Channels
- 4.1 Deg C LMTD
- 18.8 kg Dry
- 27.6 kg Wet
- R-134a ΔP = 0.8 PSI
- Surface Area: 43.7 sq.ft.
- R-134a Capacity: 1.0 Gal
- Water ΔP = 0.6 PSI

Suction line HX Specifications

- Swep B12-36
- Brazed Plate HX
- 36 Channels
- 21 Deg C LMTD
- 6.2 kg Dry
- 7.3 kg Wet
- Vapor Side ΔP = 0.5 PSI
- Liquid Side ΔP = 0.01 PSI
- Surface Area: 9.7 sq.ft.
- R-134a Capacity: 0.3 Gal
- Water ΔP = 0.9 PSI

2005 Test Plan

- ITCS setpoints from 2 – 10 C
- ETCS setpoints from 10 – 60 C
- Power supply and solar operation
- Full lunar day profile