NOTES UNLESS OTHERWISE SPECIFIED

1. FEED HORN MASS ALLOCATION = 0.55 LB (0.25 KG)
2. POLARIZER MASS ALLOCATION = 0.33 LB (0.15 KG)

REVISION				
SYM	ZONE	DESCRIPTION	DATE	APPROVAL
-	-	-	-	-

RELEASED
MASTER DRAWING
REVISION BY
EO ONLY
GSFC FILE COPY
04-Nov-04
T. HEGARTY

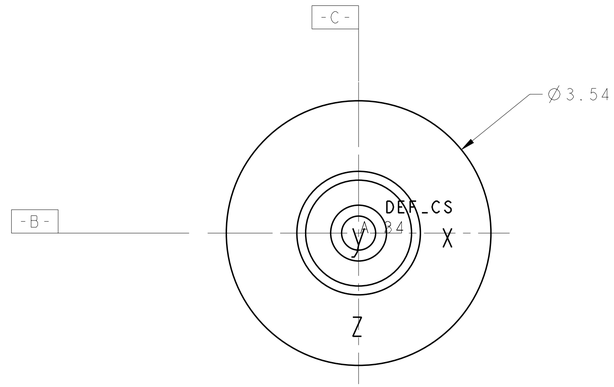

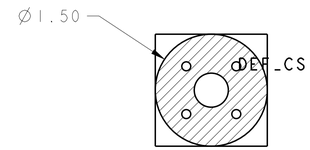

SECTION A-A

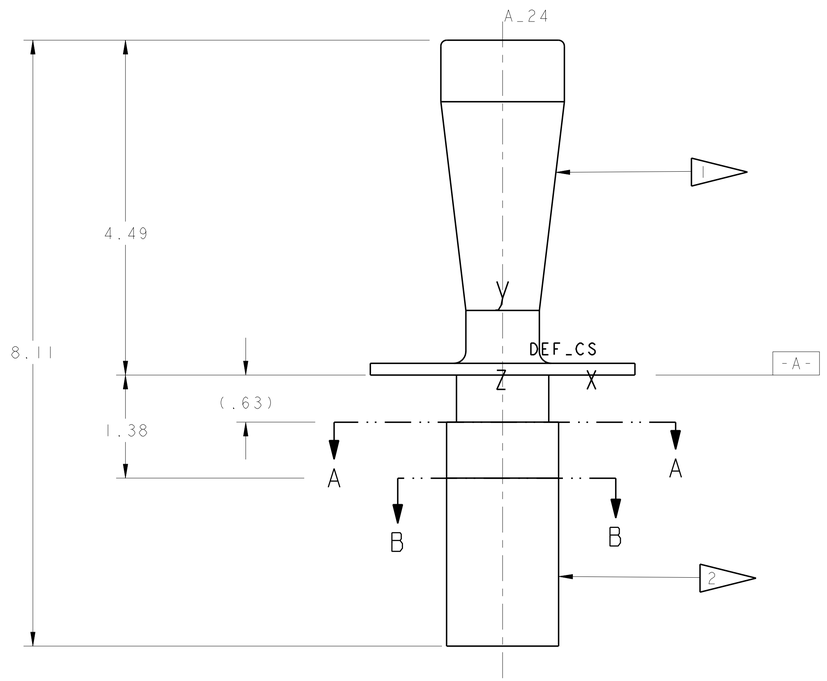

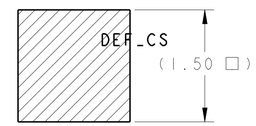

POLARIZER STAY-IN VOLUME
SECTION B-B

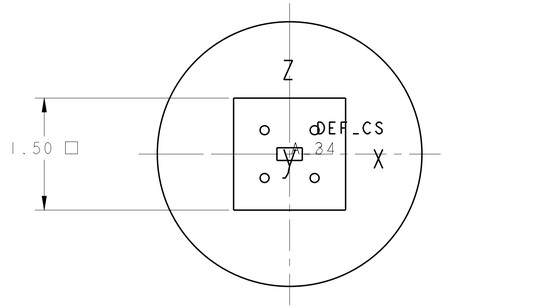

ITEM NO.	REQD	REQD	PART NO.	DESCRIPTION	MATERIAL	MATERIAL SPEC & NO.
—		—	——	FEED HORN ASSEMBLY ENVELOPE	-	---

LIST OF MATERIAL

UNLESS OTHERWISE SPECIFIED-DIMENSIONS ARE IN INCHES
TOLERANCES:
.XX 0.02 ±0.005 .XXX ±0.5 ∠ ± 1/16 FRACTIONS 125 ✓
REMOVE ALL BURRS AND SHARP EDGES R.010 OR CHAMFER MAX.

- ☐ FLIGHT HARDWARE ☐ NON-FLIGHT
- ☐ HARDNESS TEST NOT REQUIRED
- ☐ TEST HARDNESS PER ASTM E-18, LOCATION OPTIONAL
- ☐ TEST HARDNESS PER ASTM E-18 WHERE INDICATED ON FIELD OF DRAWING THUS ⊙
- ☐ NO NON-DESTRUCTIVE EXAMINATION (NDE) REQ'D
- ☐ NDE REQUIRED PER S-313-009 CODE ____

NATIONAL AERONAUTICS AND SPACE ADMINISTRATION **Goddard Space Flight Center** Greenbelt, Maryland

	NAME	INIT.	DATE
DESIGNER	KEVIN HUGHES	KH	11/04/04
DRAWN	KEVIN HUGHES	KH	11/04/04
CHECKED	KEN HERSEY	KH	11/03/04
APPROVED	RICH BARCLAY	RB	11/03/04
APPROVED	CHUCK MONROE	CM	11/03/04
APPROVED-STRESS	I. SOKOLSKY	IS	11/04/04
APPROVED-ENGINEER	JOE SCHEPIS	JS	11/03/04

DRAWING INTERPRETED PER GSFC-X673-64-1

TITLE
ENVELOPE,
FEED HORN ASSEMBLY
SDO HIGH GAIN ANTENNA

GD 2072506 REV -
CODE: 464 SCALE: 1/1 WEIGHT: SHEET: 1 OF 1

THIS DRAWING WAS PRODUCED USING
SOFTWARE: Pro/ENGINEER VERSION: 2001
FILE NAME: 2072506 REV -.0
MODEL NAME: 2072506_ENVELOPE REV -.0

NEXT ASSEMBLY	USED ON
N/A	SDO HGA

FOLD LINE
REVISION -
GD2072506