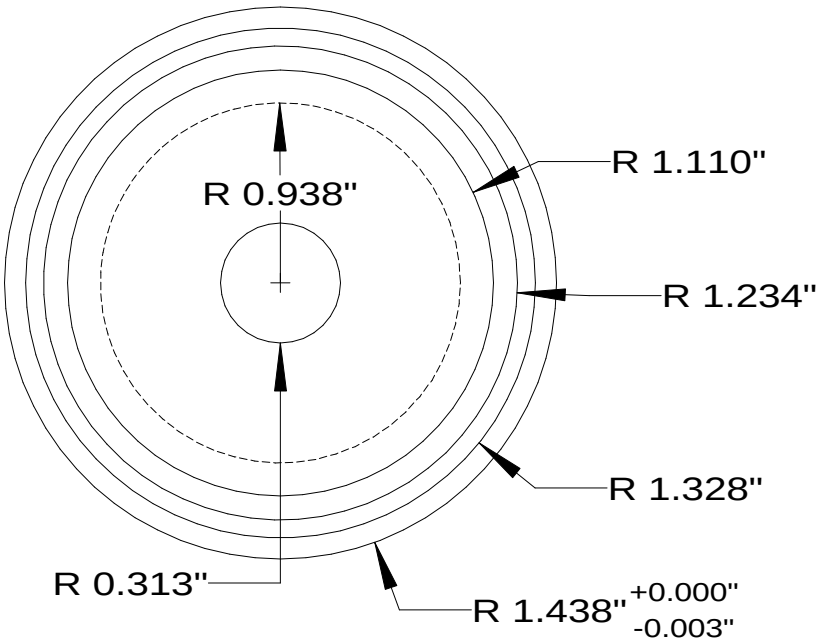

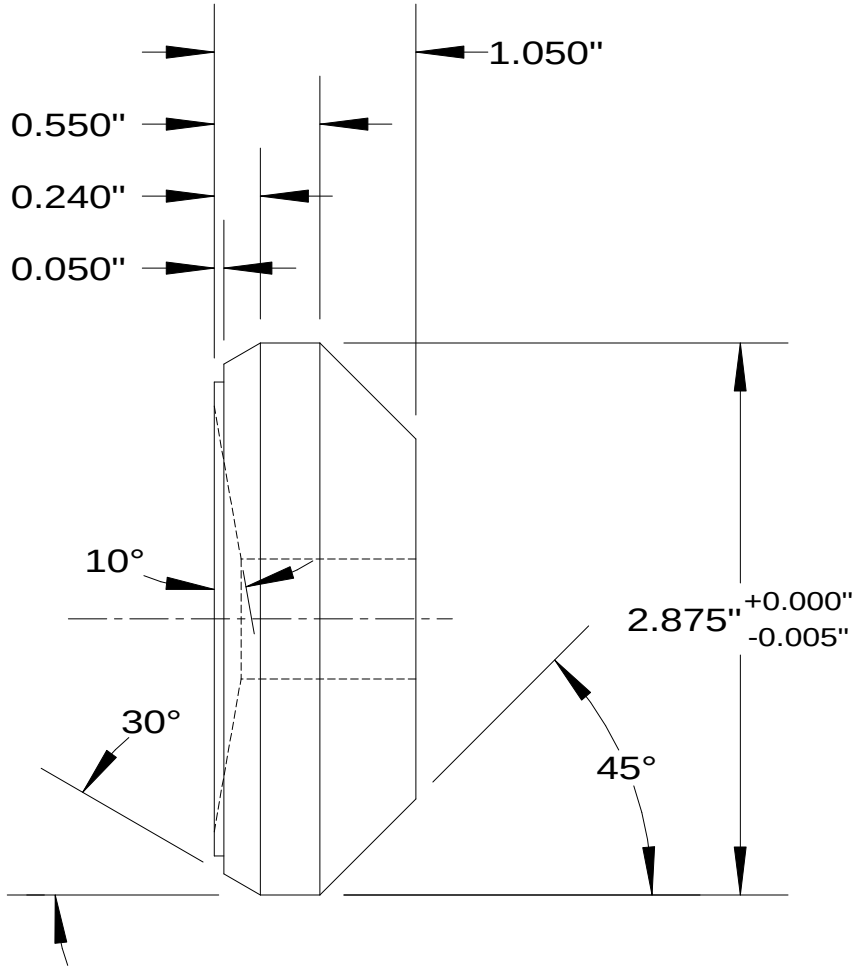

AFRL Extrusion Can - Nose End