REV	ZONE	DESCRIPTION OF CHANGE

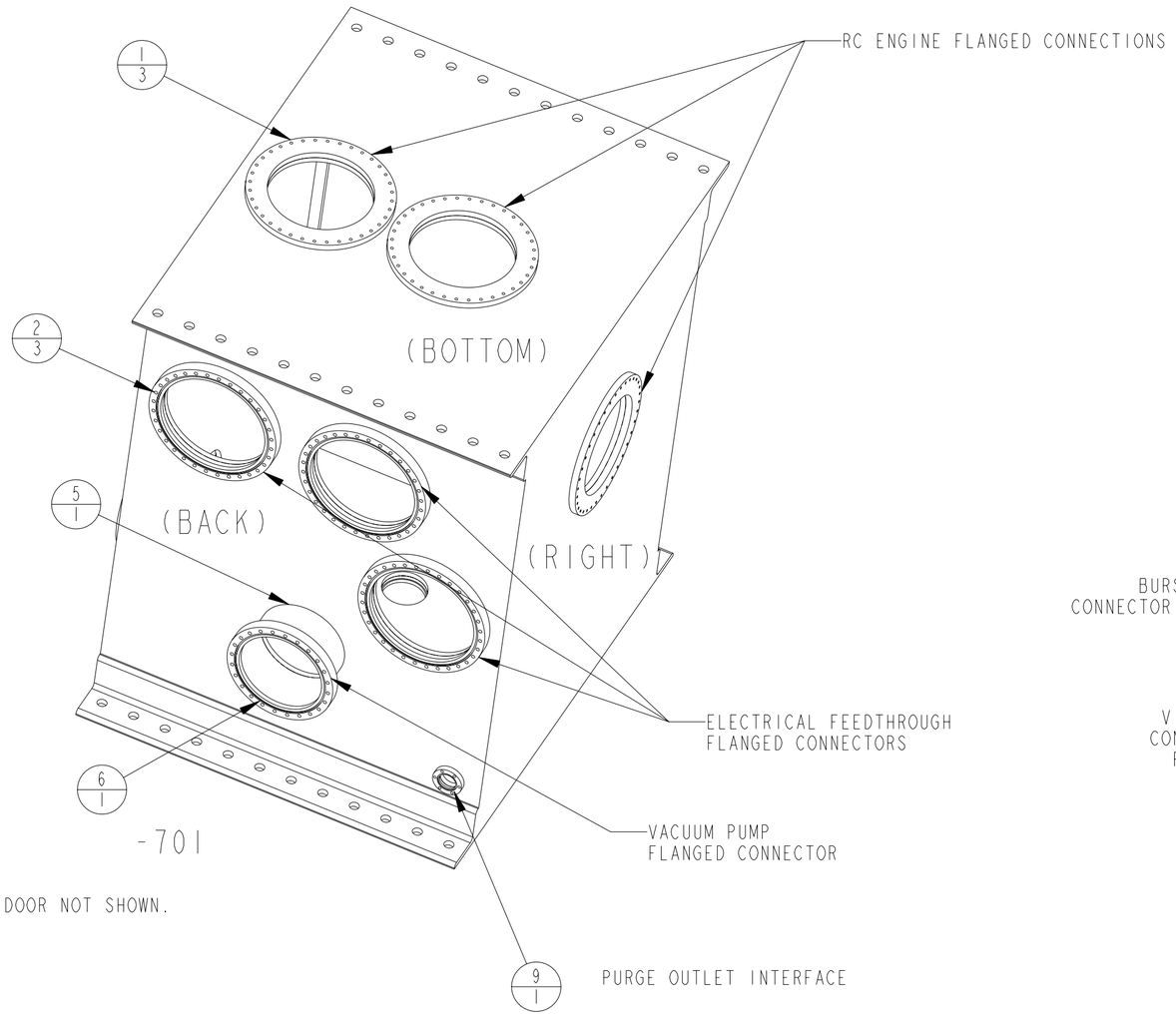

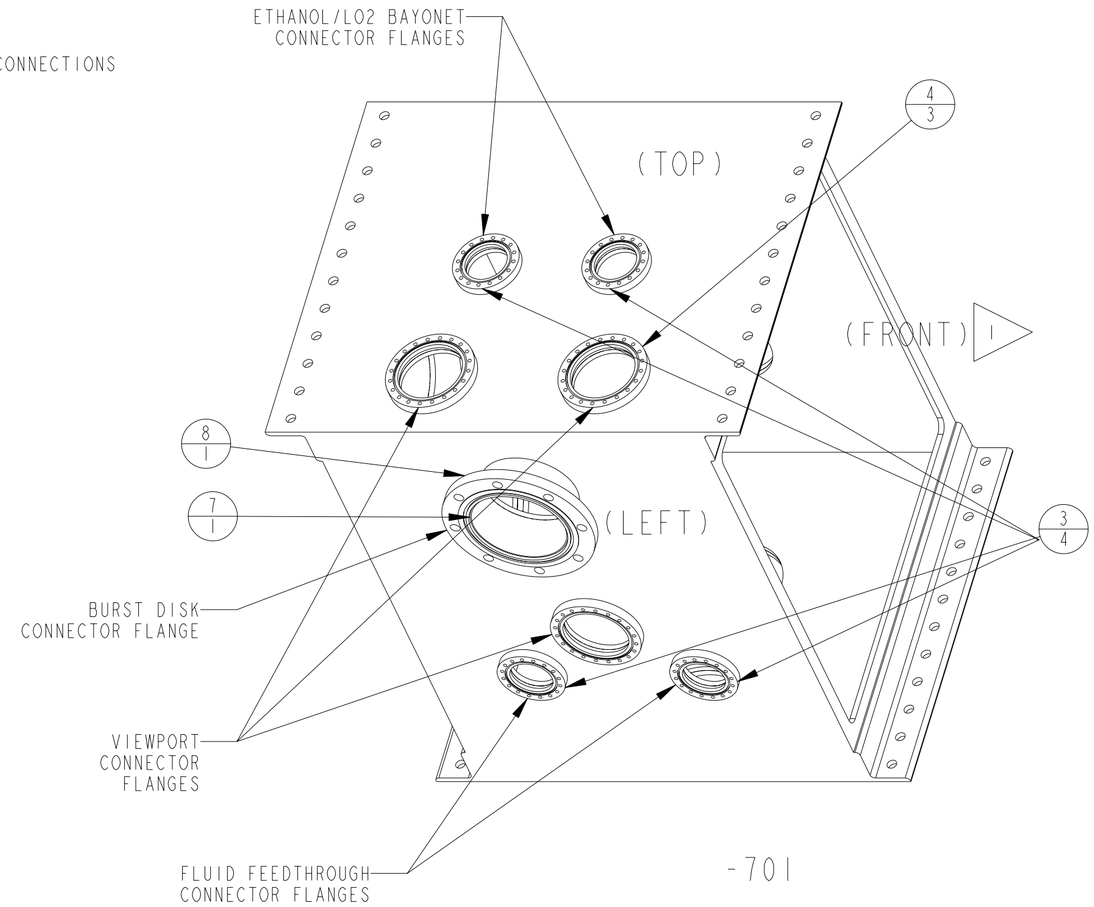

1 SEALING DOOR NOT SHOWN.

FLAG NOTES

10. TOP AND BOTTOM PLATES MAY BE EXTENDED AND DRILLED TO SUBSTITUTE FOR DRILLED ANGLES. PLATES SHALL BE ATTACHED WITH FULL PENETRATION WELDS AND FILLET WELD REINFORCEMENT IN THAT CASE.

9. BOX PLATES SHALL BE PROCESSED BEFORE WELDING TO REMOVE SURFACE CRACKS, PITS, AND OTHER SURFACE IMPERFECTIONS TO PROVIDE A SMOOTH UNIFORM SURFACE BEFORE WELDING .

8. MAXIMUM HEIGHT, WIDTH, AND DEPTH, INCLUDING ANY STIFFENING RIBS AND CLOSED DOOR, SHALL NOT EXCEED NOMINAL VALUES SHOWN PLUS 6 INCHES PER SIDE.

7. CLEAN AND DESCALE PER NASA/JSC PRC-5001 OR EQUIVALENT.

6. AFTER WELDING, ALL FLANGE SEALING SURFACES SHALL BE FLAT WITHIN .002 AND HAVE A 16 MICROINCH FINISH.

5. WELD AND INSPECT PER NASA.JSC PRC-0005 CLASS B OR EQUIVALENT. PUT SEAL WELDS ALL AROUND INSIDE EDGE OF FLANGES AND STITCH FILLET WELDS ALL AROUND OUTSIDE EDGES OF FLANGES.

4. BAG AND TAG TO IDENTIFY PART NUMBER PER NASA/JSC PRC-9002 OR EQUIVALENT.

3. CLEAN ALL SURFACES TO LEVEL GC PER NASA/JSC PRC-5001 OR EQUIVALENT.

2. FABRICATION PER NASA/JSC SKZ36103755, JSC FABRICATION TOLERANCES AND PRACTICES OR EQUIVALENT.

1. INTERPRET DRAWING PER NASA/JSC JPG8500.4, ENGINEERING DRAWING SYSTEM MANUAL.

NOTES: UNLESS OTHERWISE SPECIFIED

QTY	PART NUMBER	DESCRIPTION	MATERIAL	SPECIFICATION	ITEM
1	-019	FLANGE, CONFLAT, 2.75", BORED NON-ROTATABLE, TAPPED HOLES	304L STAINLESS STEEL	NW35CF	9
1	-017	FLANGE, 8" NPS, CLASS 150	340L OR 316L STAINLESS STEEL	ASME SA-240 304L OR 316L	8
1	-015	PIPE LENGTH, 8" NPS, SCHEDULE 5S	304L OR 316L STAINLESS STEEL	ASME SA-240 304L OR 316L	7
1	-013	FLANGE, CONFLAT, 10.0", BORED NON-ROTATABLE, TAPPED HOLES	304L STAINLESS STEEL	NW200CF	6
1	-011	TUBE, 8.0" ODX7.83" ID X 4"LG	304L OR 316L STAINLESS STEEL		5
3	-009	FLANGE, CONFLAT, 8.0", BORED NON-ROTATABLE, TAPPED HOLES	304L STAINLESS STEEL	NW150CF	4
4	-005	FLANGE, CONFLAT, 6.0", BORED NON-ROTATABLE, TAPPED HOLES	304L STAINLESS STEEL	NW100CF	3
3	-003	FLANGE, CONFLAT, 12.0", BORED NON-ROTATABLE, TAPPED HOLES	304L STAINLESS STEEL	NW250CF	2
3	-001	FLANGE, ENGINE MATING	304L OR 316L STAINLESS STEEL	ASME SA-240 304L OR 316L	1
X	-701	BOX, FLANGED STINGER	304L OR 316L STAINLESS STEEL	ASME SA-240 304L OR 316L	

UNLESS NOTED OTHERWISE DIM ARE IN INCHES, TOL ARE:
.0 ± .1 .000 ± .005
.00 ± .02 ANGULAR ± .5°

SURFACE FINISH IN MICROINCHES RMS UNLESS NOTED OTHERWISE ✓

FRACTURE CRITICAL: ☐ YES ☒ NO

NEXT ASSY SEN24100265

DWG FILENAME STINGER_BOX_WITH_FLANGES.DRW

☐ FLT HDWR ☐ APPLICABLE GSE
☒ OTHER (SPECIFY) TEST

SIGNATURES		DATE
DR	M. CABIRAN	02/12/04
ENG	M. CABIRAN	02/12/04
CH		
APP		
QE		
MATL		
STRESS		
AUTH		

NATIONAL AERONAUTICS AND SPACE ADMINISTRATION

LYNDON B. JOHNSON SPACE CENTER HOUSTON, TEXAS

BOX, FLANGED STINGER

PROJECT NT APS

SIZE	CAGE CODE	DWG NO	REV
C	21356	SLN24100309	

SCALE 1/10 ORG EP4 FMT P01MAR01 SHEET 1 OF 12

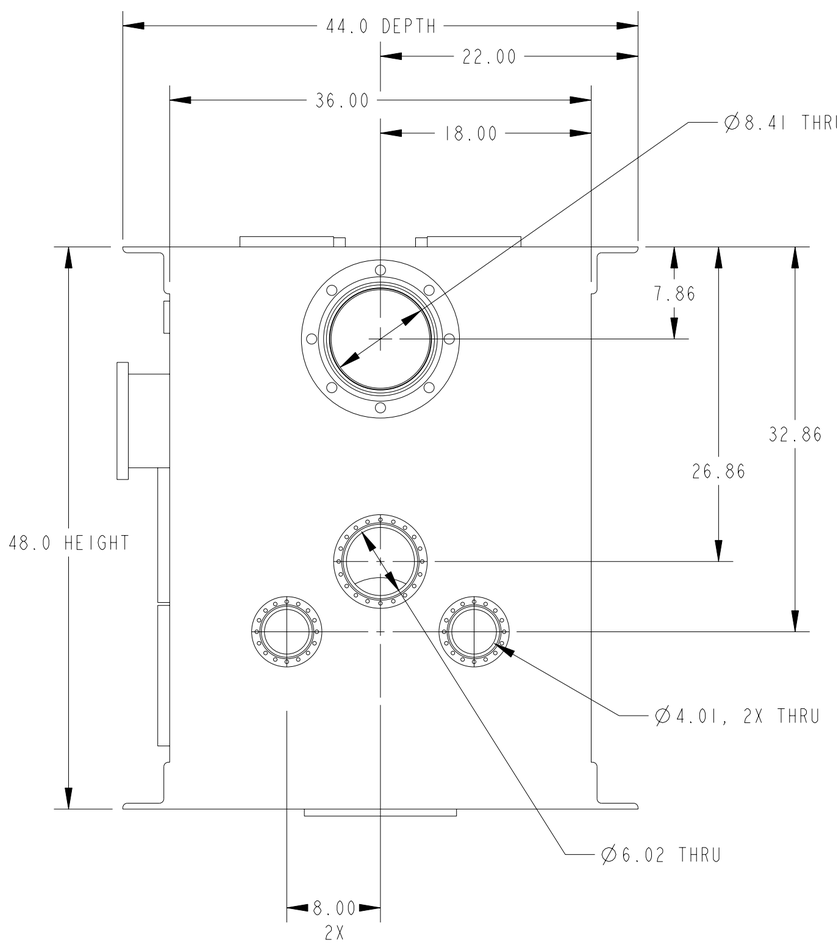

LEFT

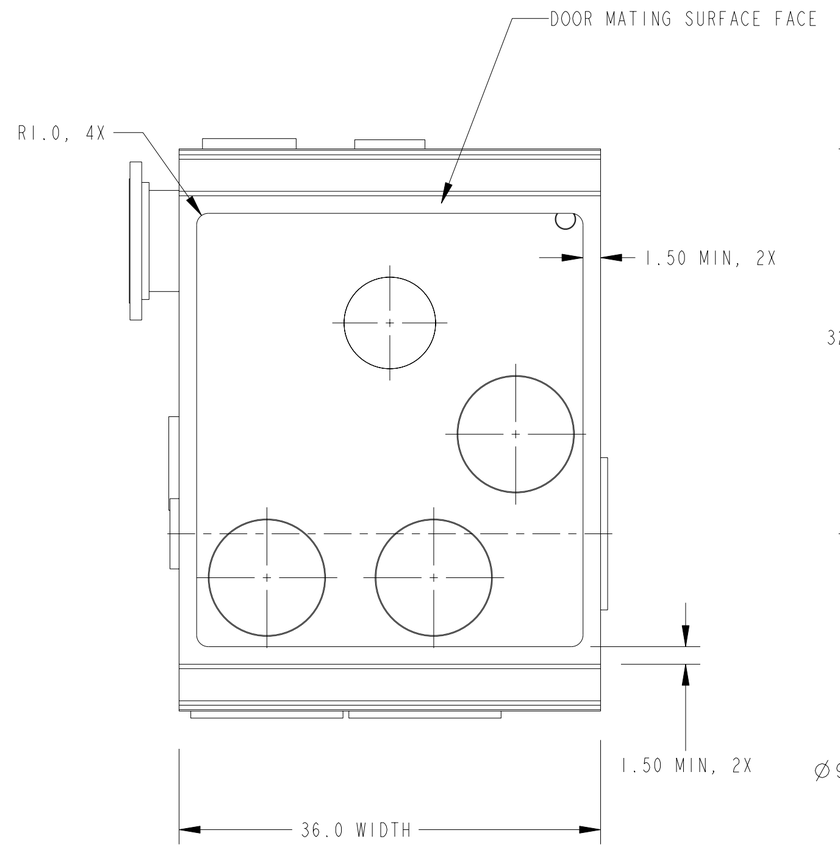

FRONT

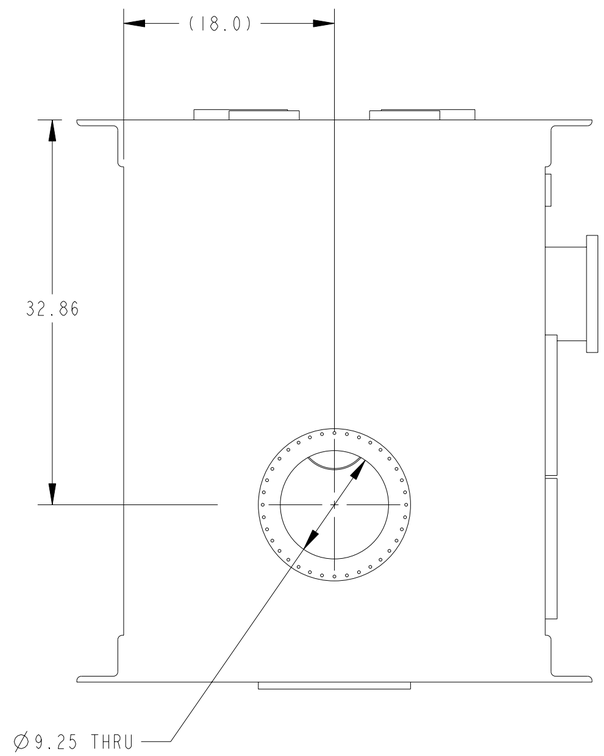

RIGHT

SIZE	CAGE CODE	DWG NO	REV
C	21356	SLN24100309	
SCALE 1/1	ORG EP4	FMT P01MAR01	SHEET 2 OF 12

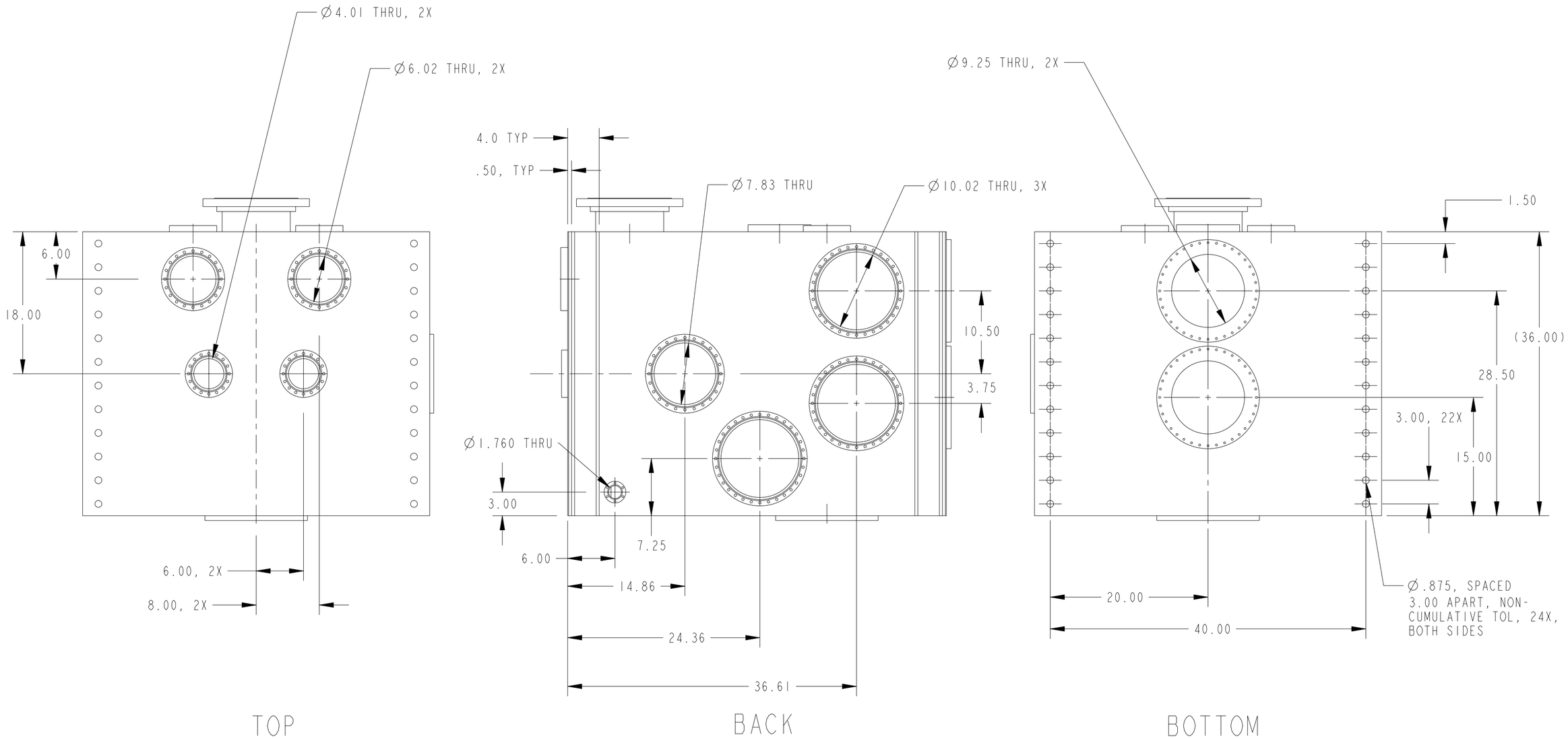

SIZE	CAGE CODE	DWG NO	REV
C	21356	SLN24100309	
SCALE 1/10	ORG EP4	FMT P01MAR01	SHEET 3 OF 12

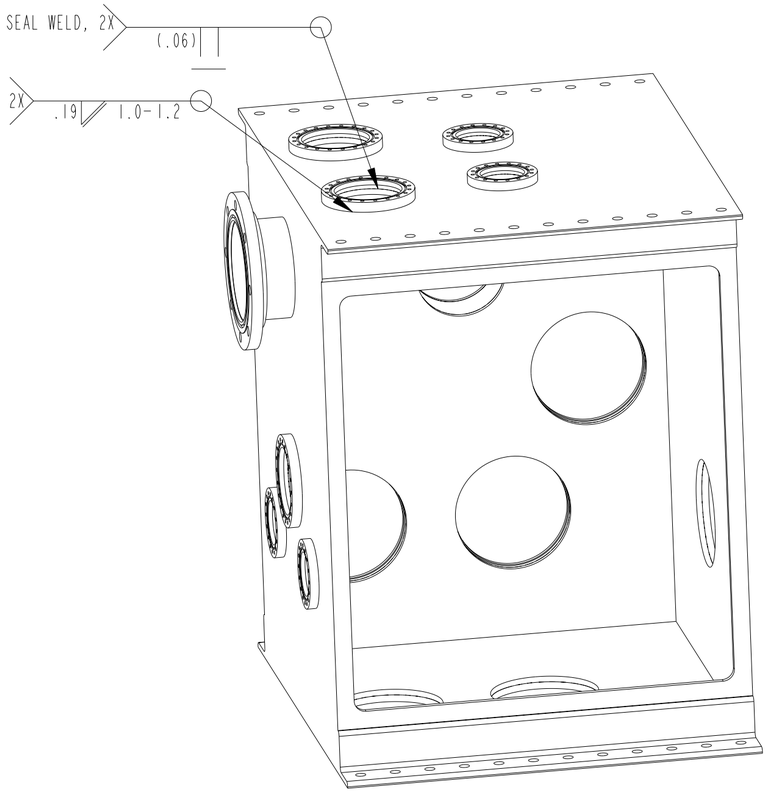

SCALE 1/10

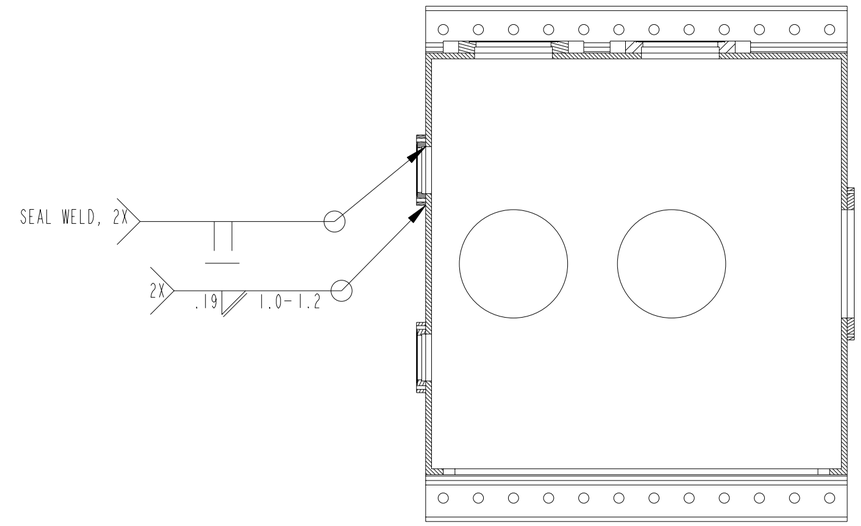

SECTION C-C

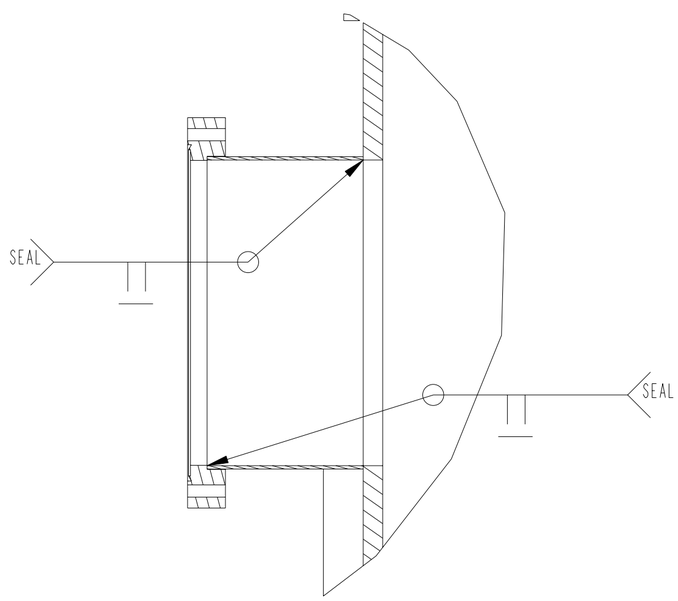

DETAIL H
SCALE 1/3

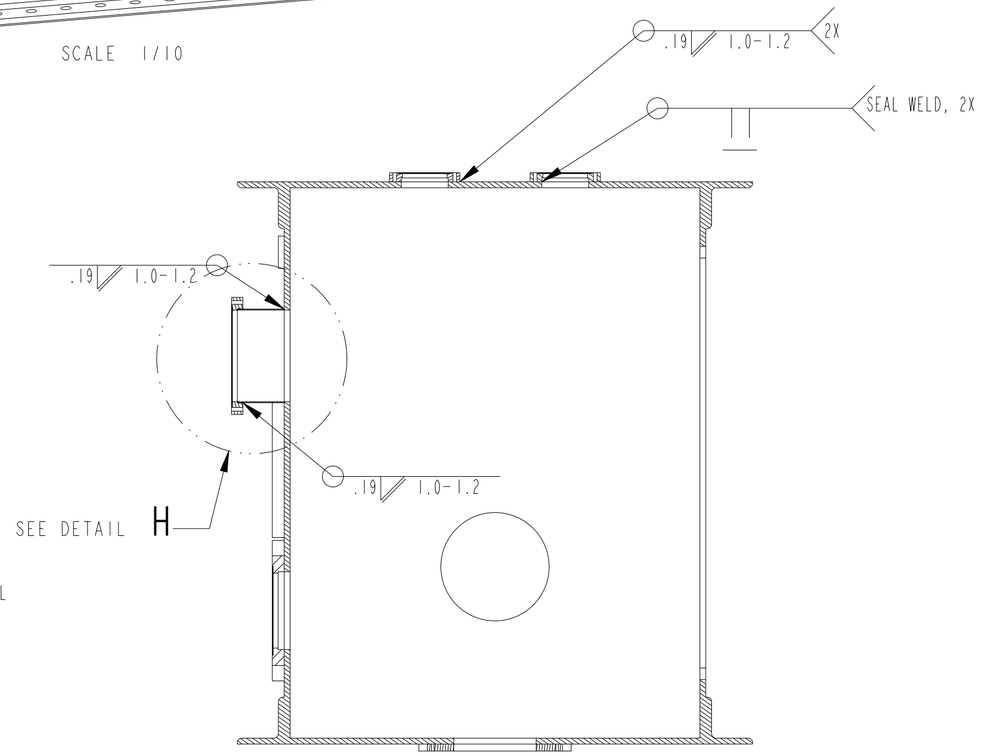

SECTION A-A

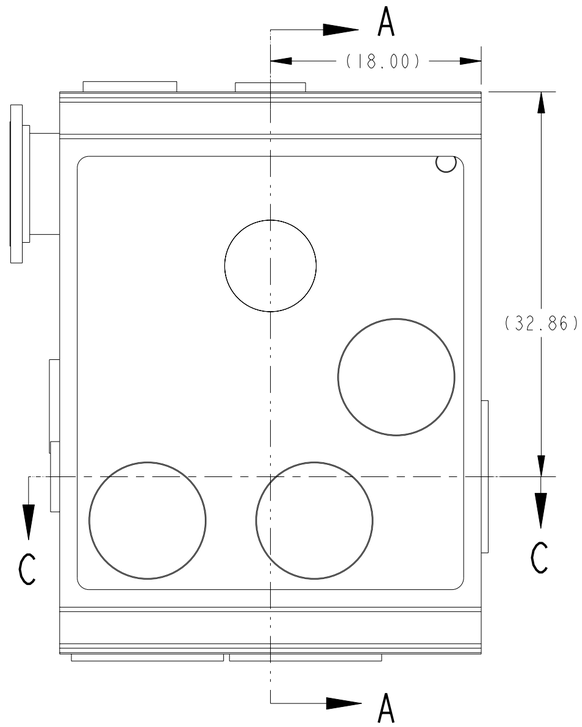

SIZE	CAGE CODE	DWG NO	REV
C	21356	SLN24100309	
SCALE 1/10	ORG EP4	FMT P01MAR01	SHEET 4 OF 12

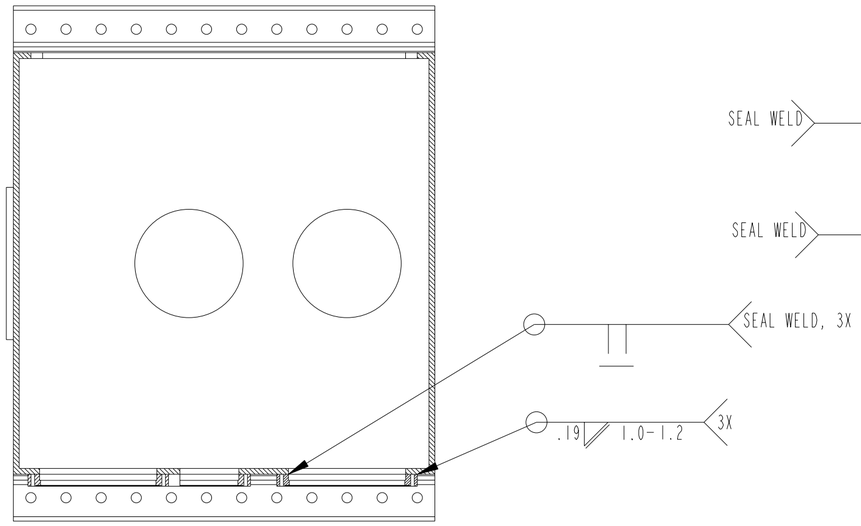

SECTION K-K

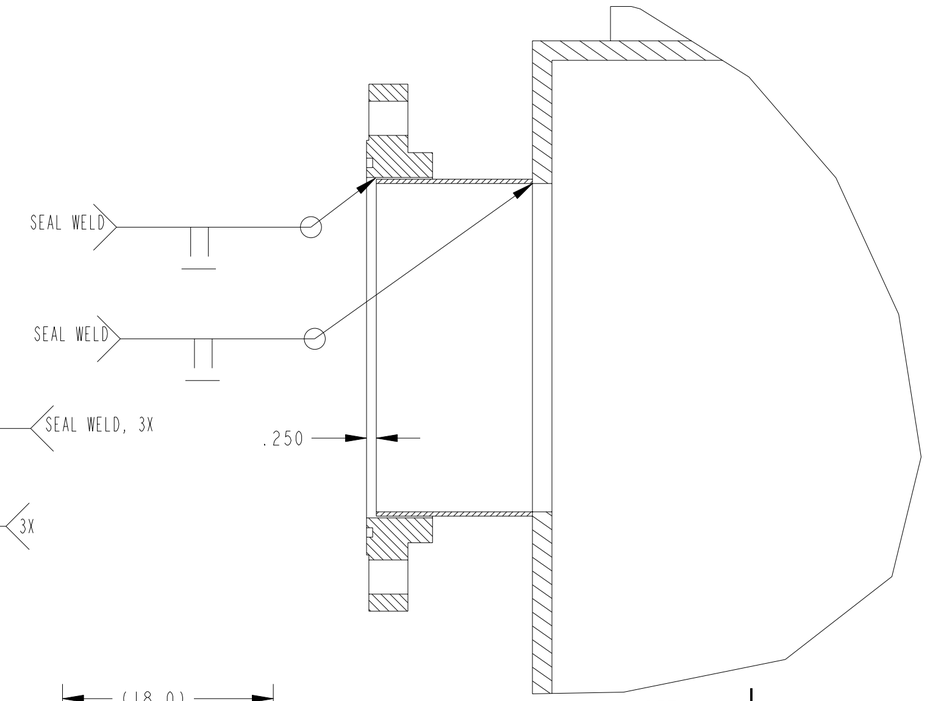

DETAIL J
SCALE 1/3

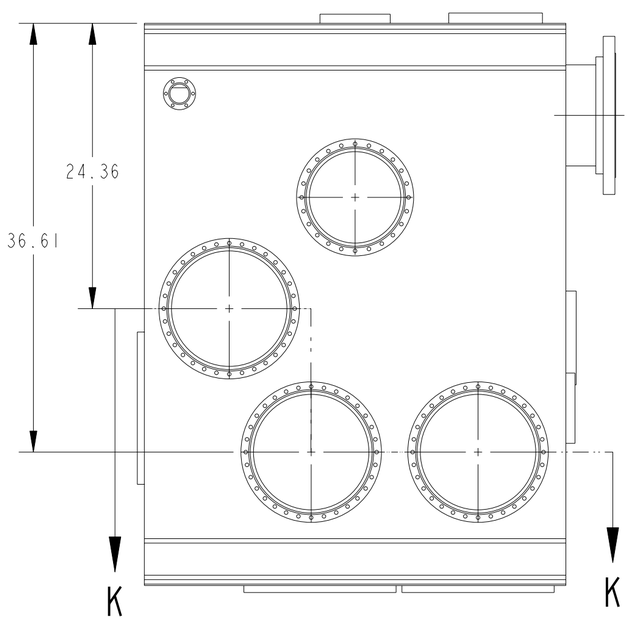

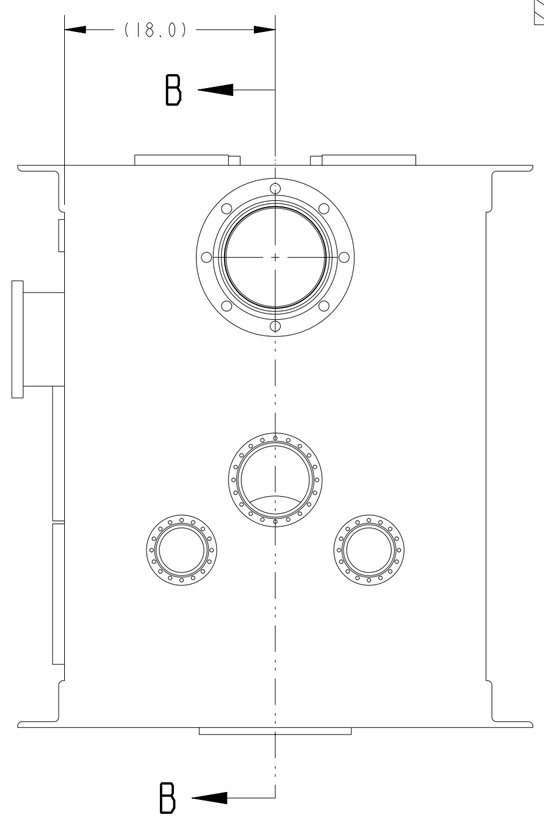

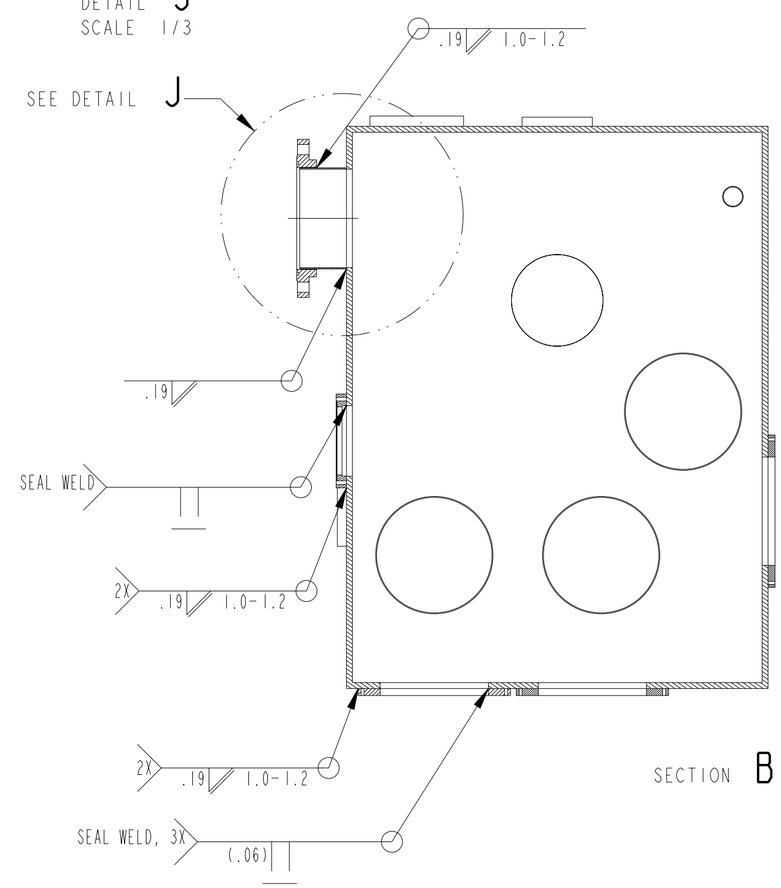

SECTION B-B

SIZE	CAGE CODE	DWG NO	REV
C	21356	SLN24100309	
SCALE 1/10	ORG EP4	FMT P01MAR01	SHEET 5 OF 12

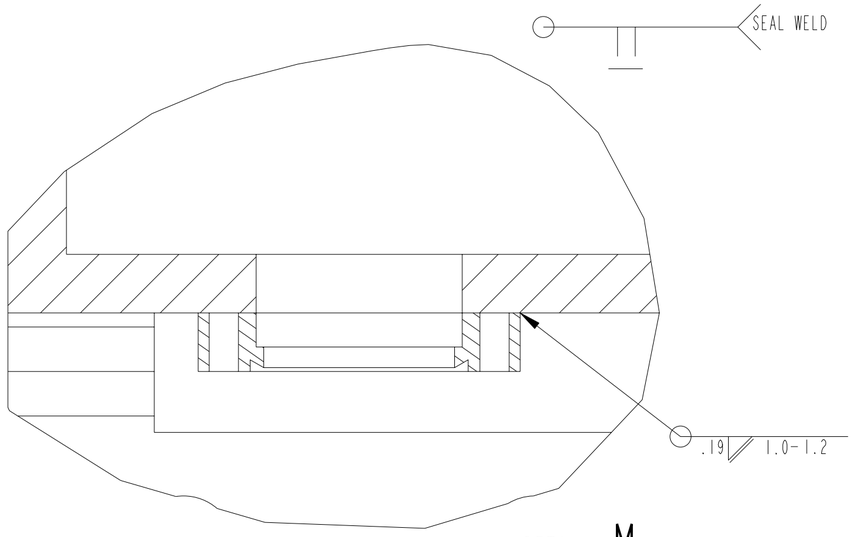

DETAIL M
SCALE 1/1

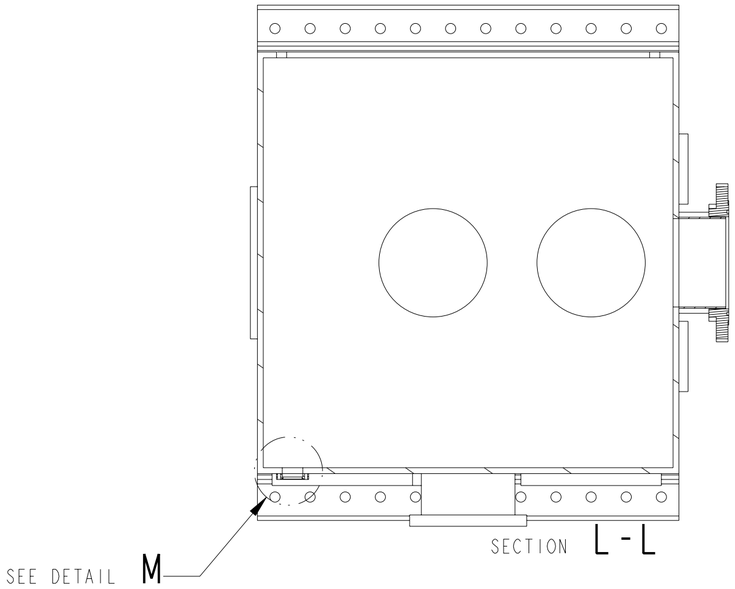

SECTION L-L

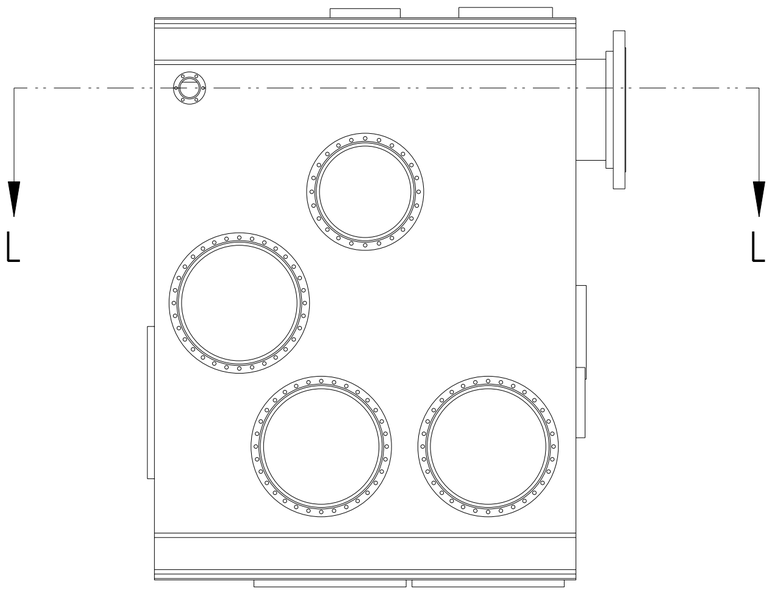

SIZE	CAGE CODE	DWG NO	REV
C	21356	SLN24100309	
SCALE 1/10	ORG EP4	FMT P01MAR01	SHEET 6 OF 12

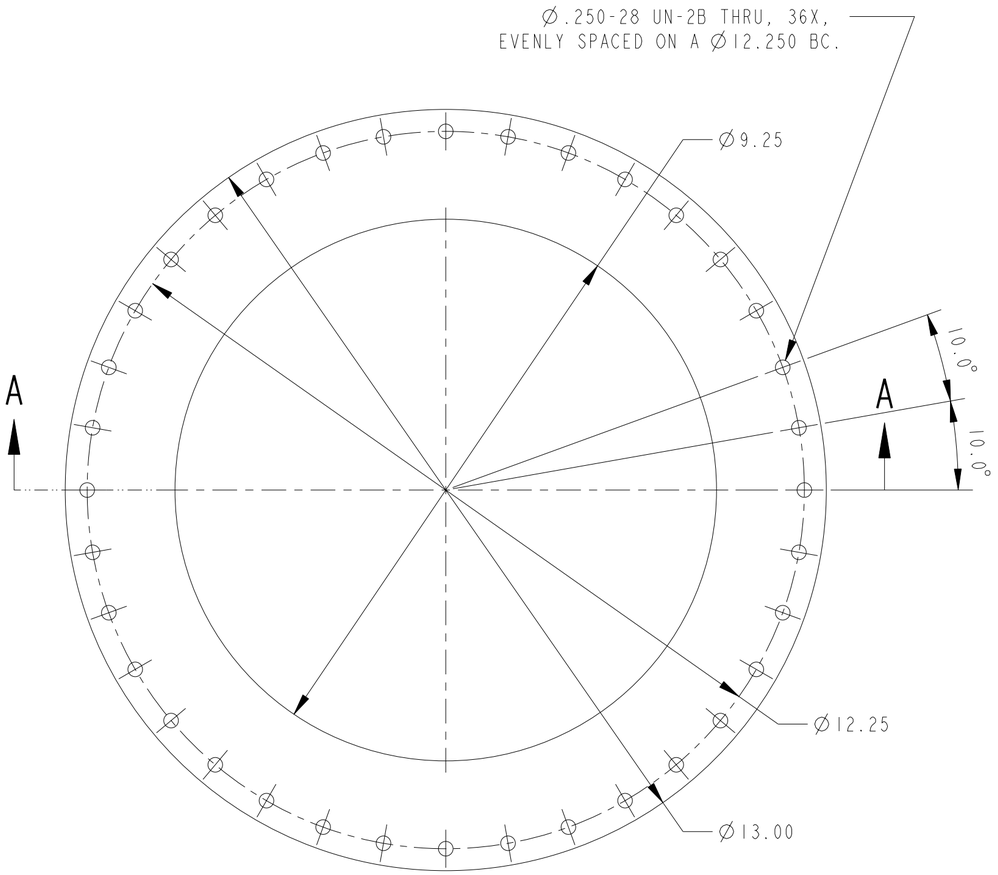

SCALE 1/2

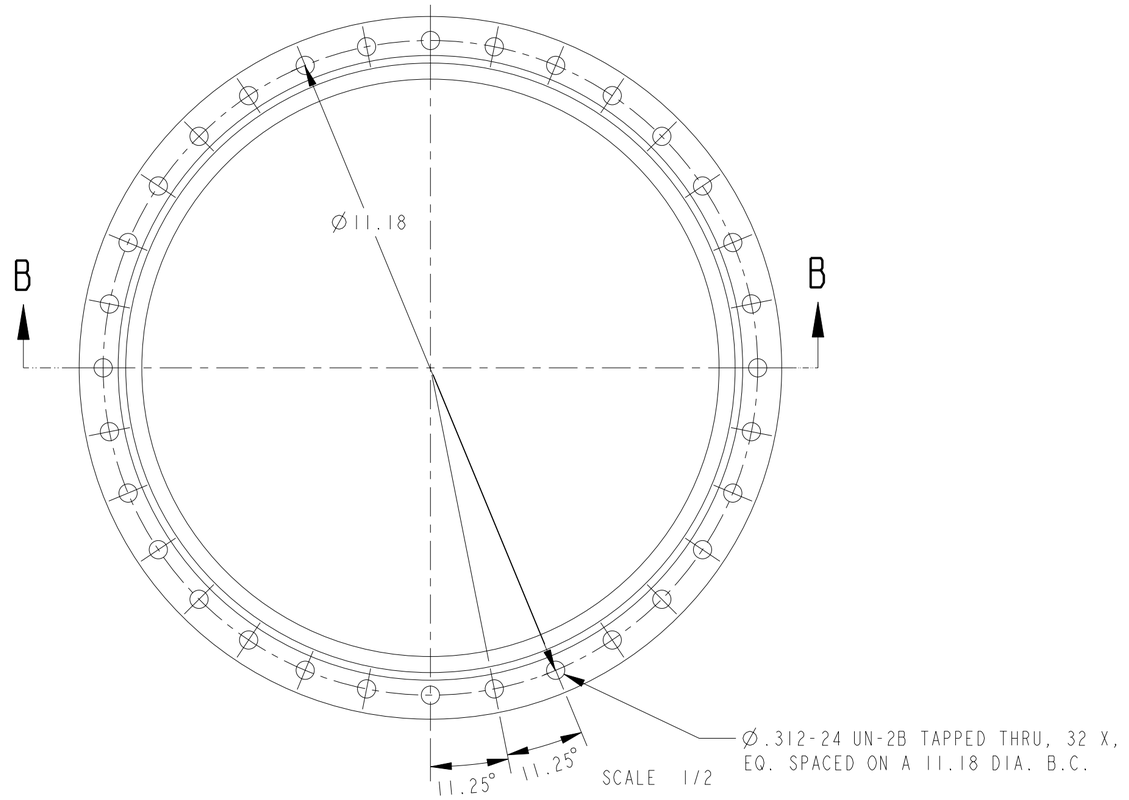

SCALE 1/2

SECTION A-A

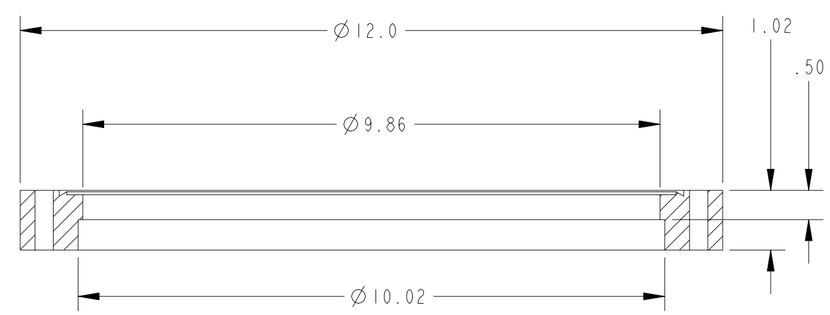

SECTION B-B

-001, ENGINE MATING FLANGE, QTY = 3

-003, ELECTRICAL FEEDTHROUGH WELD ON FLANGE, QTY = 3
12" CONFLAT BORED THRU FLANGE WITH TAPPED THRU HOLES.
NW250CF, DIMENSIONS FOR REFERENCE ONLY.

SIZE	CAGE CODE	DWG NO	REV
C	21356	SLN24100309	
SCALE 1/10	ORG EP4	FMT P01MAR01	SHEET 7 OF 12

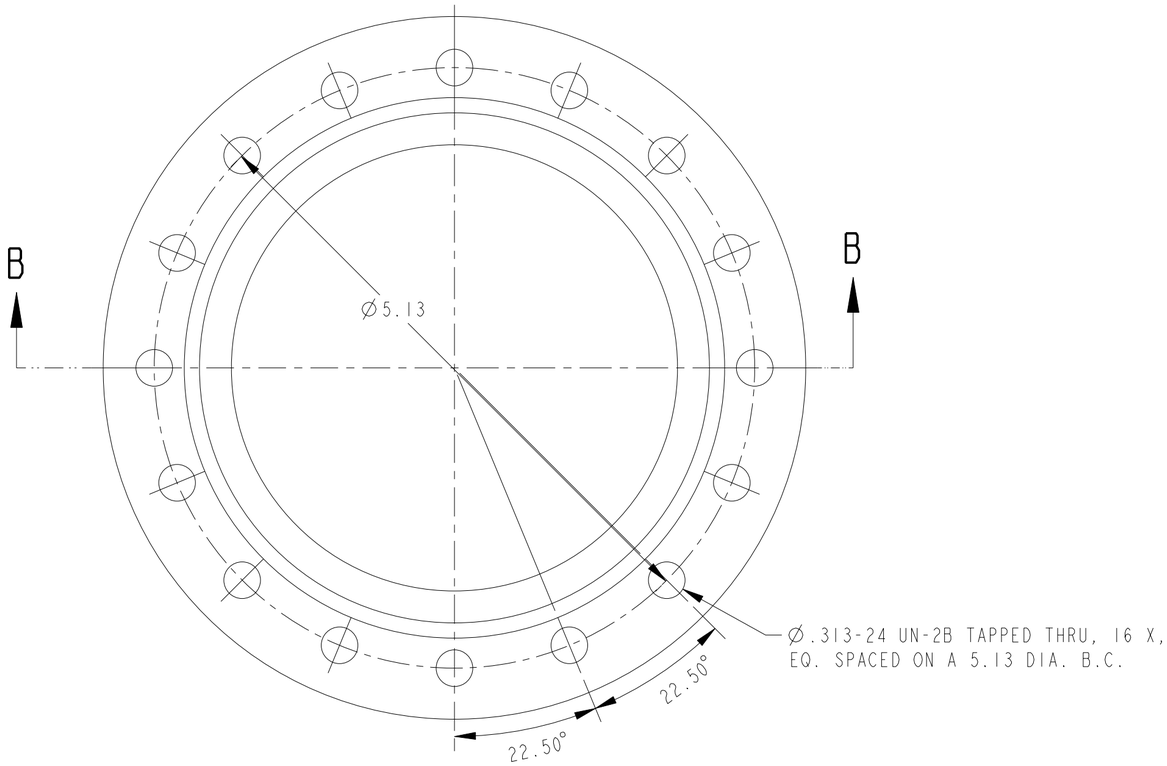

SCALE 1/1

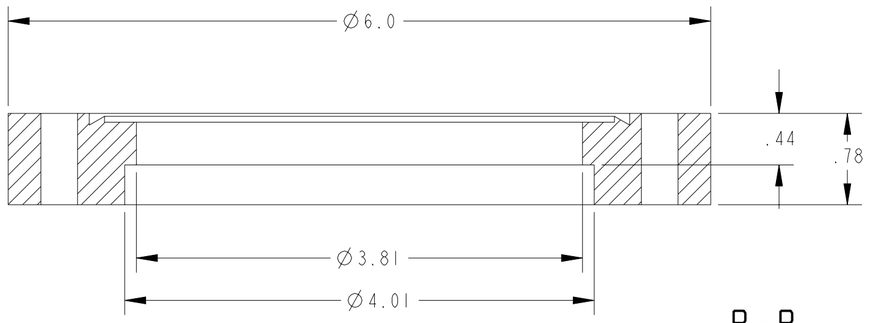

SECTION B-B

-005, BAYONET AND FLUID FEEDTHROUGH WELD ON FLANGES, QTY=4
6.0" CONFLAT BORED THRU FLANGE WITH TAPPED THRU HOLES.
NW100CF, DIMENSIONS FOR REFERENCE ONLY

SIZE	CAGE CODE	DWG NO	REV
C	21356	SLN24100309	
SCALE 1/2	ORG ***	FMT P01MAR01	SHEET 8 OF 12

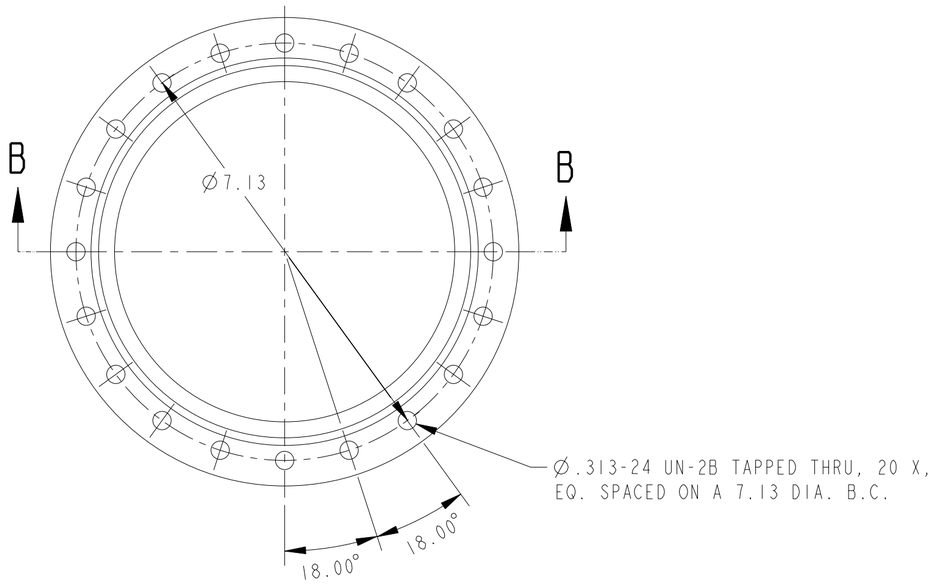

SCALE 1/2

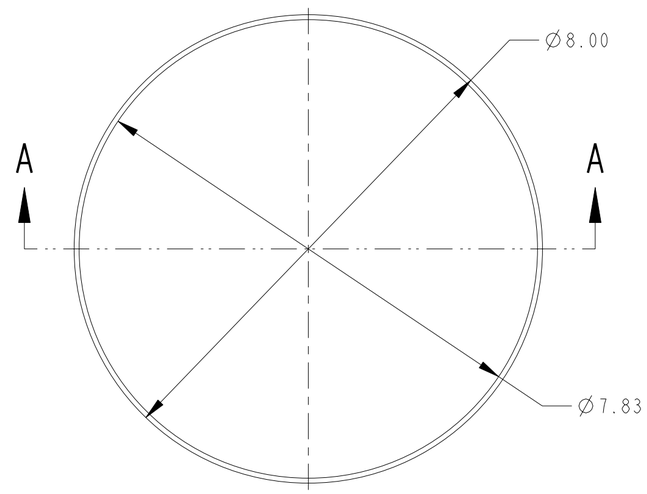

SCALE 1/2

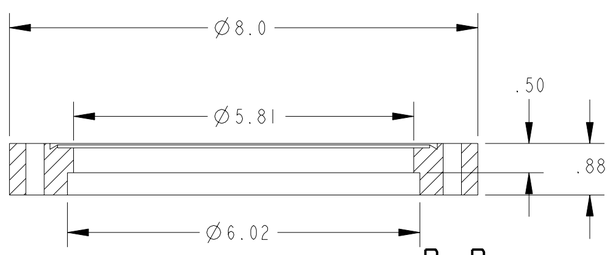

SECTION B-B

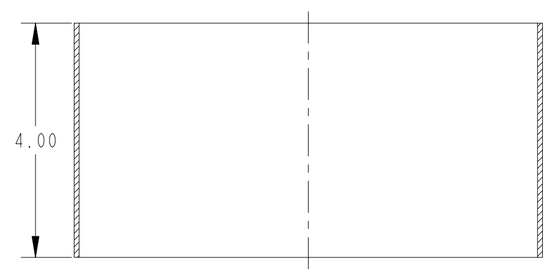

SECTION A-A

-009, VIEWPORT WELD ON FLANGE, QTY=3
8" CONFLAT BORED THRU FLANGE WITH TAPPED THRU HOLES,
NW150CF, DIMENSIONS FOR REFERENCE ONLY

-011, 8.0" OD X 7.83 ID X 4" LG TUBE, QTY=1
304L STAINLESS STEEL,

SIZE	CAGE CODE	DWG NO	REV
C	21356	SLN24100309	
SCALE 1/2	ORG ***	FMT P01MAR01	SHEET 9 OF 12

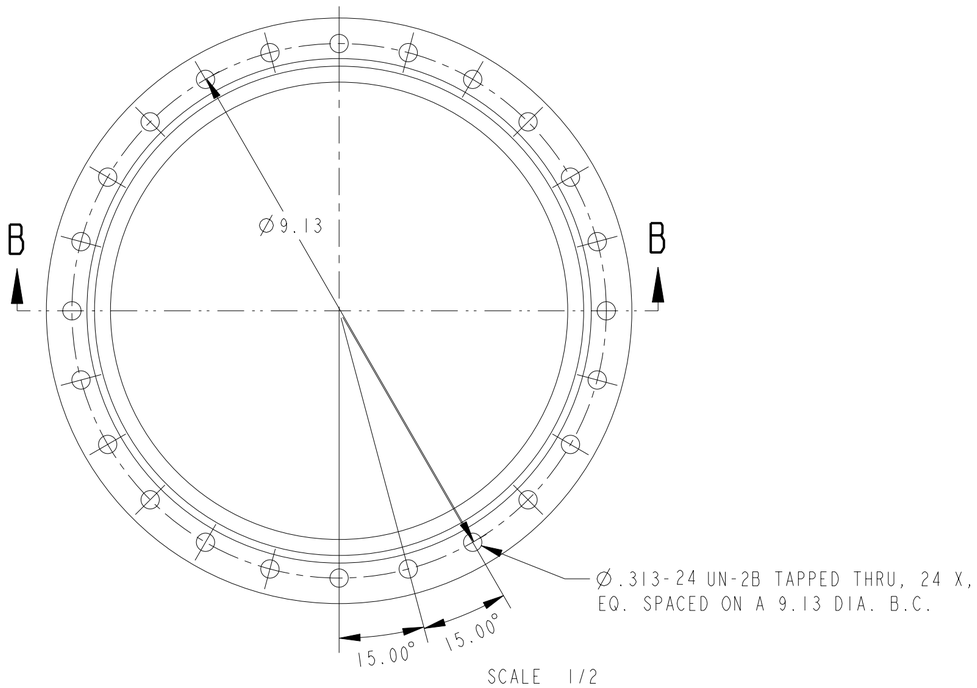

SCALE 1/2

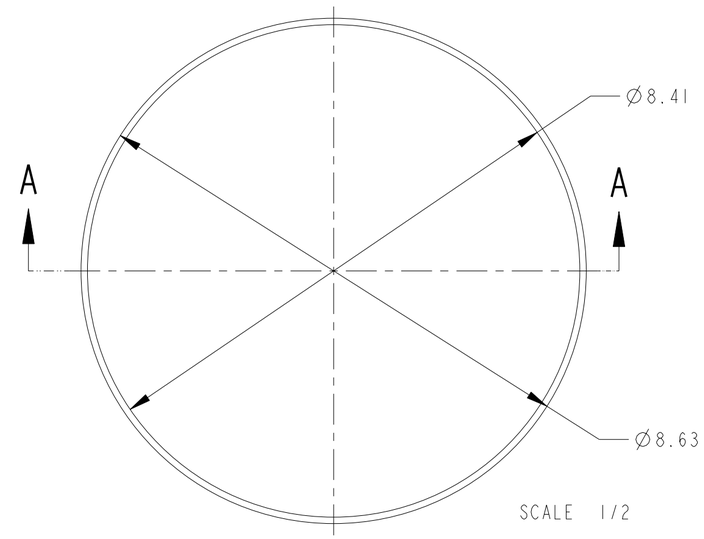

SCALE 1/2

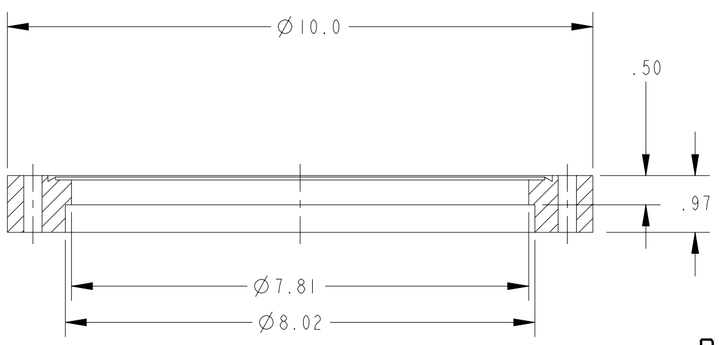

SECTION B-B

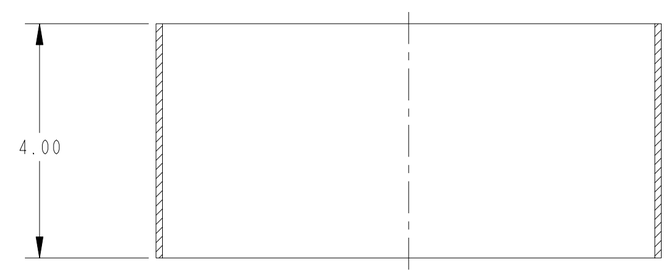

SECTION A-A

-013, 10" CONFLAT VACUUM WELD ON FLANGE, QTY=1
10" BORED THRU FLANGE WITH TAPPED THRU HOLES
NW200CF, DIMENSIONS FOR REFERENCE ONLY

-015, 8" NPS, SCH 5S X 4" LG PIPE LENGTH, QTY=1
DIMENSIONS FOR REFERENCE

SIZE	CAGE CODE	DWG NO	REV
C	21356	SLN24100309	
SCALE 1/2	ORG EP4	FMT P01MAR01	SHEET 10 OF 12

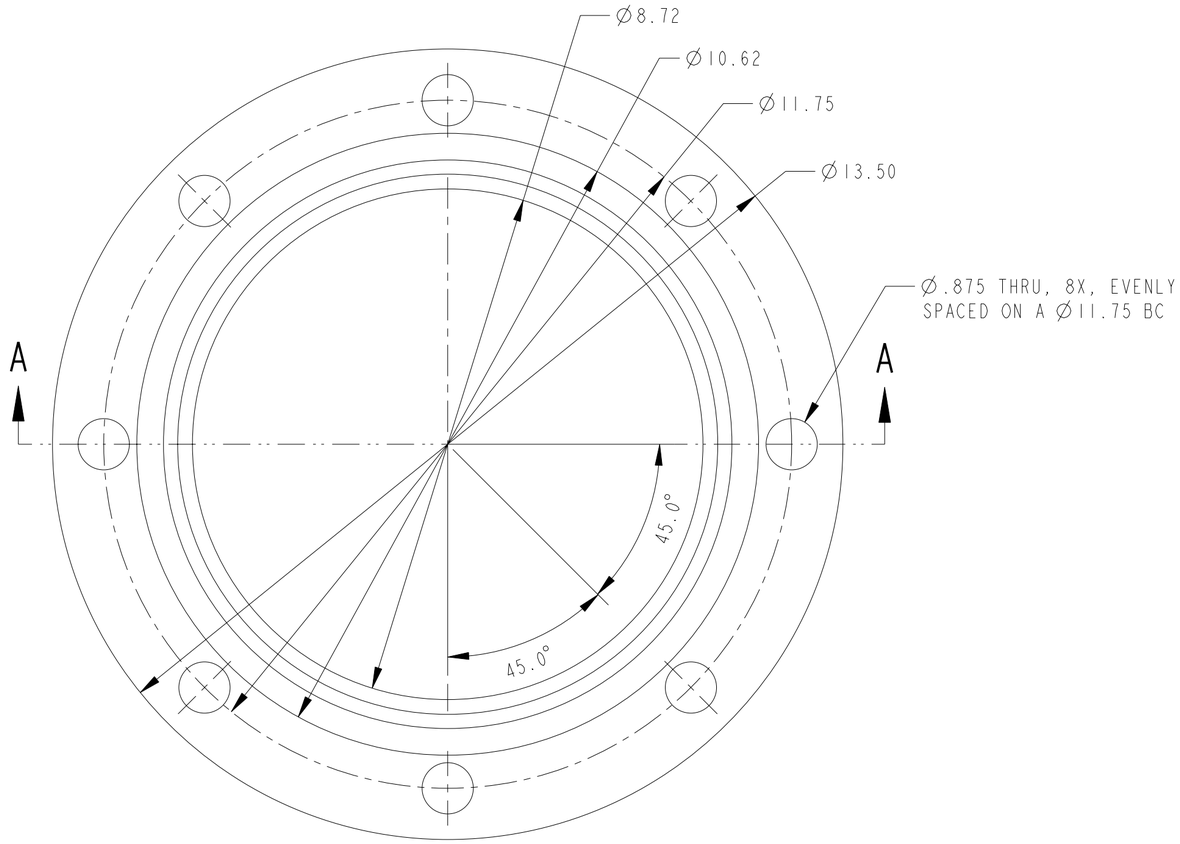

SCALE 1/2

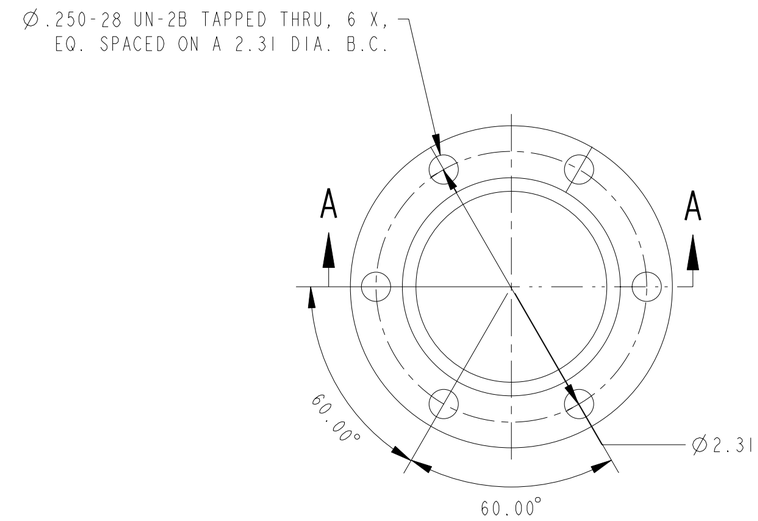

SCALE 1/1

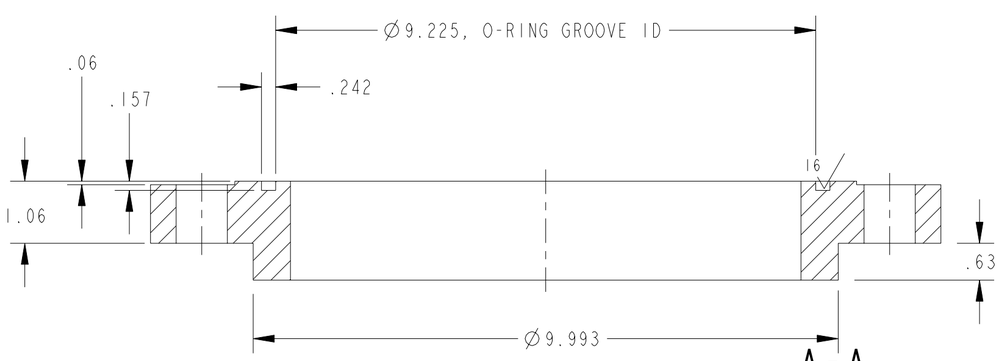

SECTION A-A

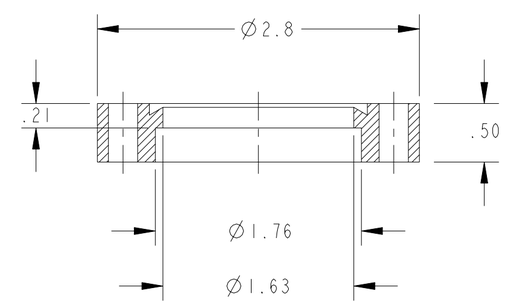

SECTION A-A

-017, 8" NPS, CLASS 150 FLANGE, QTY=1
DIMENSIONS FOR REFERENCE ONLY
EXCEPT FOR O-RING GROOVE DIMENSIONS

-019, PURGE OUTLET WELD ON FLANGE, QTY=1
2.75" CONFLAT BORED THRU FLANGE WITH TAPPED THRU HOLES.
NW35CF, DIMENSIONS FOR REFERENCE ONLY.

SIZE	CAGE CODE	DWG NO	REV
C	21356	SLN24100309	
SCALE 1/3	ORG EP4	FMT P01MAR01	SHEET 11 OF 12

DYNAMIC LOADING ON THE RC ENGINE FLANGES

SIZE	CAGE CODE	DWG NO	REV
C	21356	SLN24100309	
SCALE 1/10	ORG EP4	FMT P01MAR01	SHEET 12 OF 12