NOTICE - ANSYS COMPONENT DRAWINGS, SPECIFICATIONS, OR OTHER DATA ARE USED FOR ANY PURPOSE OTHER THAN IN CONNECTION WITH A DEFINITELY RELATED COMMERCIAL PROCUREMENT OR ANY OTHER PURPOSE WHICH MAY BE CONSTRUED AS INDICATING OR IMPLYING THE GRANTING OF PERMISSION TO PRIVATELY MANUFACTURE, USE OR SELL ANY PATENTED INVENTION THAT MAY BE INVOLVED. FURNISHING, OR ANY OTHER PERSON OR CORPORATION CONTRARY AND WAIVES OR PERMISSION TO MANUFACTURE, USE OR SELL ANY PATENTED INVENTION THAT MAY BE RELATED THERETO.

| REVISIONS | | | |
|---|---|---|---|
| SYM | DESCRIPTION | DATE | APPROVAL |
| | | - - | |
| | | - - | |
| | | - - | |

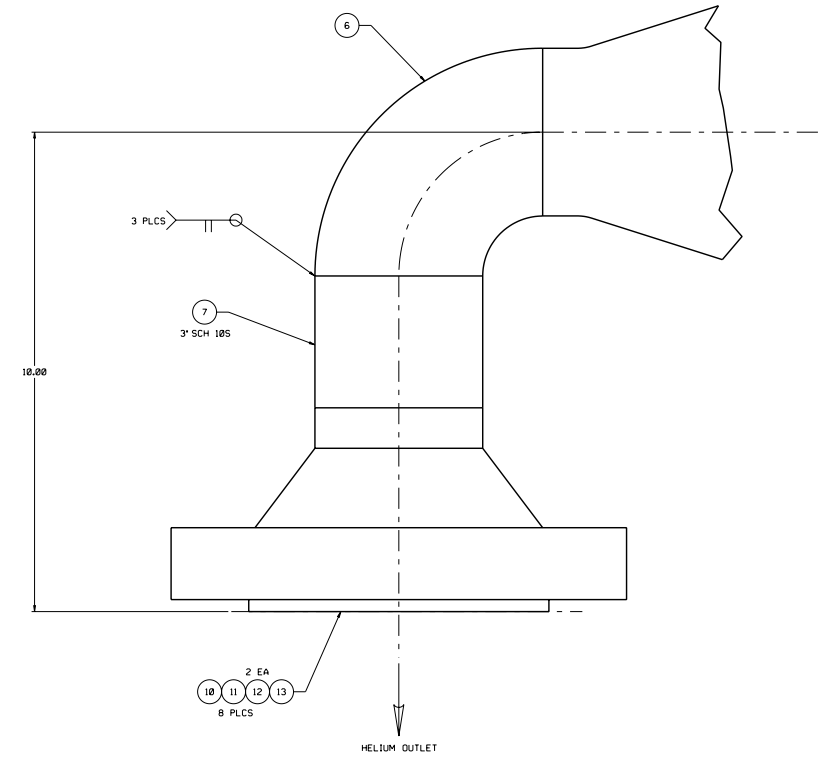


VIEW C/1

SCALE: FULL

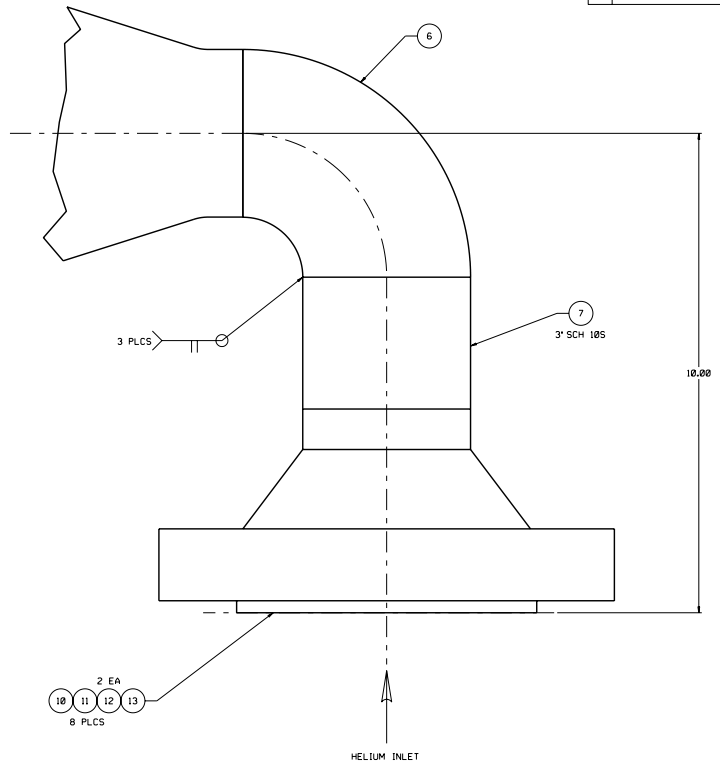


VIEW B/1

SCALE: FULL

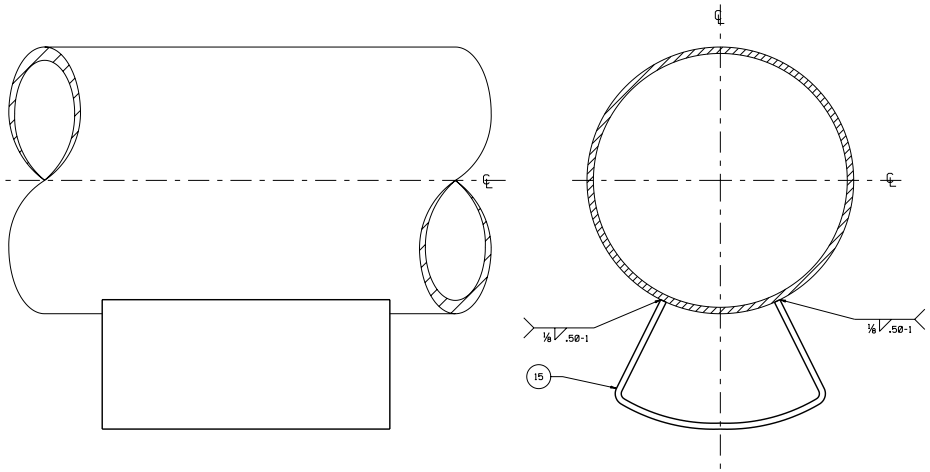


FIND NO. 16/1

SCALE: FULL

90M11776

SEE SHT1

REVISION

| | | |
|---|---|---|
| NAK HEAT EXCHANGER | SPECIAL TEST EQUIPMENT DESIGN GROUP<br>GEORGE C. MARSHALL SPACE FLIGHT CENTER<br>NATIONAL AERONAUTICS AND SPACE ADMINISTRATION<br>HUNTSVILLE, ALABAMA | |
| DATE - - | SPACE CODE ED38 | SIZE E / 90M11776 |
| DETAILER | SCALE NOTED | SHEET 3 OF 3 |