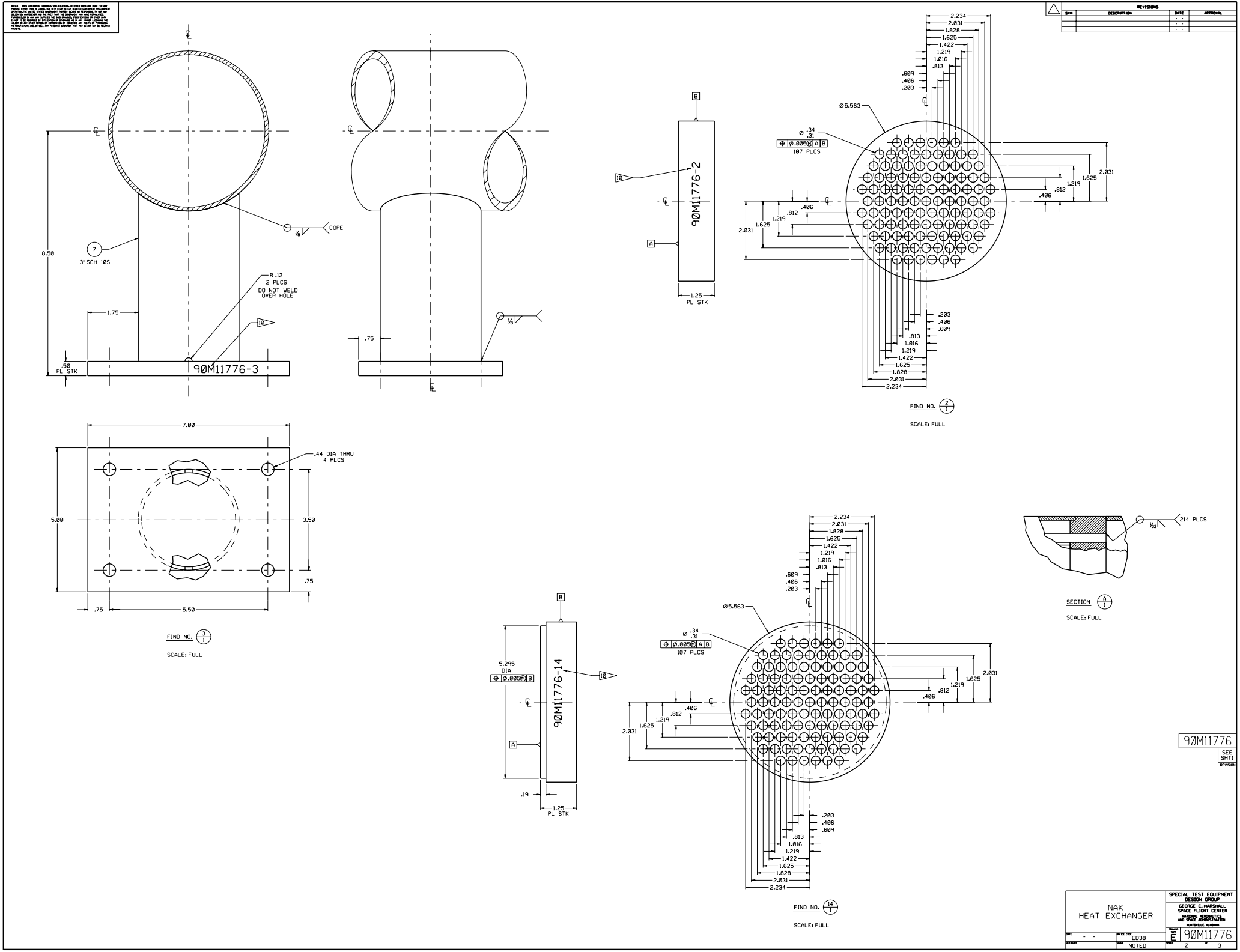

REVISIONS
SYM
DESCRIPTION
DATE
APPROVAL
8.50
7
3" SCH 10S
COPE
1/8
R .12
2 PLCS
DO NOT WELD
OVER HOLE
1.75
10
.50
PL STK
90M11776-3
.75
1/8
B
10
90M11776-2
A
1.25
PL STK
2.234
2.031
1.828
1.625
1.422
1.219
1.016
.813
.609
.406
.203
Ø5.563
Ø .34
.31
Ø.005 M A B
107 PLCS
.406
.812
1.219
1.625
2.031
.203
.406
.609
.813
1.016
1.219
1.422
1.625
1.828
2.031
2.234
FIND NO. 2/1
SCALE: FULL
7.00
.44 DIA THRU
4 PLCS
5.00
3.50
.75
.75
5.50
FIND NO. 3/1
SCALE: FULL
B
5.295
DIA
Ø.005 M B
10
90M11776-14
A
.19
1.25
PL STK
2.234
2.031
1.828
1.625
1.422
1.219
1.016
.813
.609
.406
.203
Ø5.563
Ø .34
.31
Ø.005 M A B
107 PLCS
.406
.812
1.219
1.625
2.031
.203
.406
.609
.813
1.016
1.219
1.422
1.625
1.828
2.031
2.234
FIND NO. 14/1
SCALE: FULL
1/32
214 PLCS
SECTION A/1
SCALE: FULL
90M11776
SEE SHT1
REVISION
NAK
HEAT EXCHANGER
SPECIAL TEST EQUIPMENT DESIGN GROUP
GEORGE C. MARSHALL SPACE FLIGHT CENTER
NATIONAL AERONAUTICS AND SPACE ADMINISTRATION
HUNTSVILLE, ALABAMA
SIZE
E
90M11776
SCALE
NOTED
SHEET
2
OF
3