REV	ZONE	DESCRIPTION OF CHANGE

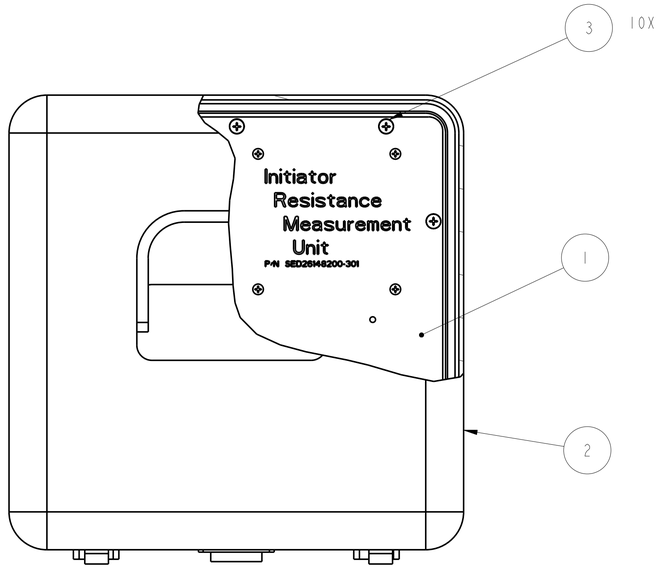

SECTION A-A

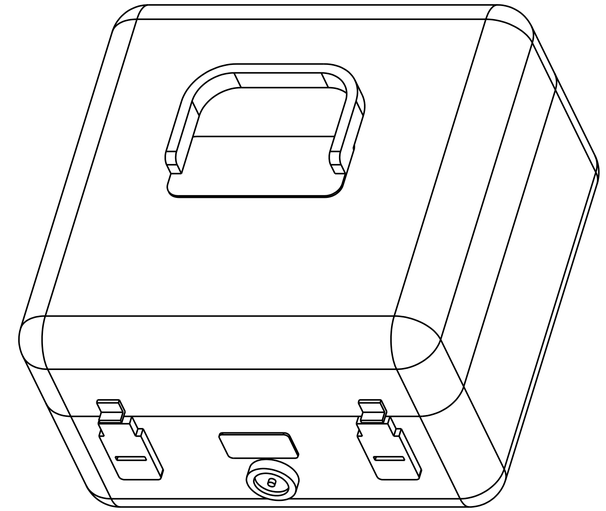

SCALE 1/2

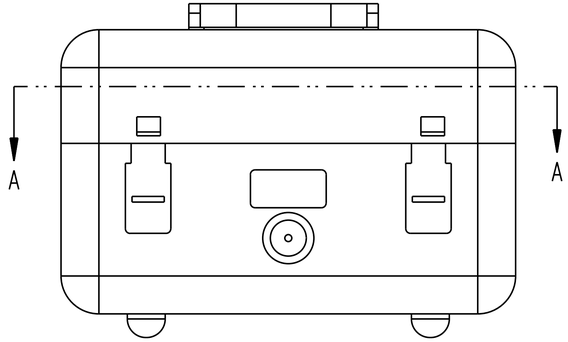

SCALE 1/2

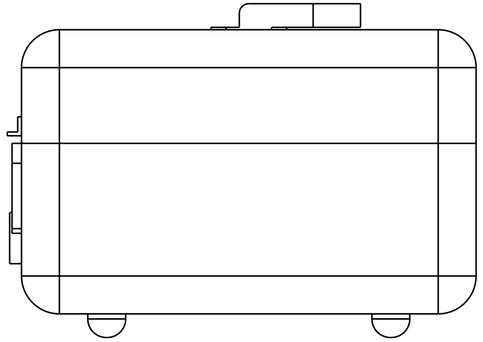

QTY	PART NUMBER	DESCRIPTION	MATERIAL	SPECIFICATION	ITEM
					10
					9
					8
					7
					6
					5
2	SDD26148 20X-001	IDENTIFICATION PLATE	OTTO CONTROLS 21649	SW2	4
1	MS51959-44	FLAT HEAD SCREW, #10, 82°, .43 LONG		NASM15959	3
1	SED26148300-301	CONTAINER ASSEMBLY	ZERO -----	A1	2
1	SED26148201-301	PANEL ASSEMBLY, IRMU			1
-301	SED26148200	INITATOR RESISTANCE MEASUREMENT UNIT (IRMU)			--

3. TORQUE FASTENERS TO ____ IN-LBS, SEAL WITH AEROGLAZE 9743/9700.
2. AFFIX ID PLATE APPROXIMATELY WHERE SHOWN.
1. INTERPRET DRAWING PER JPG 8500.4.

NOTES: UNLESS OTHERWISE SPECIFIED

UNLESS NOTED OTHERWISE DIM ARE IN INCHES, TOL ARE:
.0 ± .1 .000 ± .005
.00 ± .02 ANGULAR ± .5°

SURFACE FINISH IN MICROINCHES RMS UNLESS NOTED OTHERWISE ✓

FRACTURE CRITICAL ☐ YES ☐ NO

NEXT ASSY N/A

DWG FILENAME IRMU_ASSY.DRW

☐ FLT HDWR ☒ APPLICABLE GSE ☐ OTHER (SPECIFY) _____

SIGNATURES		DATE
DR	F. SALAZAR	02/03/04
ENG	S. LIMING	02/03/04
CH	CH Signature	CH Date
APP	APP Signature	APP Date
QE	QE Signature	QE Date
MATL	MATL Signature	MATL Date
STRESS	STRESS Signature	STRESS Date
AUTH	AUTH Signature	AUTH Date
TEST APP		STAMP Date

NATIONAL AERONAUTICS AND SPACE ADMINISTRATION

LYNDON B. JOHNSON SPACE CENTER HOUSTON, TEXAS

INITIATOR RESISTANCE MEASUREMENT UNIT (IRMU)

PROJECT SHUTTLE

SIZE	CAGE CODE	DWG NO	REV
D	21356	SED26148200	TST

SCALE 1/2 | ORG EP5 | FMT P01MAR01 | SHEET 1 OF 1

STATUS: Check for DCNs against the drawing.