SSP 50184

Physical Media, Physical Signaling & Link-Level Protocol Specifications for Ensuring Interoperability of High Rate Data Link Stations on the International Space Station

International Space Station Program

Revision B
25 May 2001

National Aeronautics and Space Administration
International Space Station Program
Johnson Space Center
Houston, Texas

REVISION AND HISTORY PAGE

REV.	DESCRIPTION	PUB. DATE
-	Initial Release	08-27-98
A	Revision A	08-27-98
B	Revision B authorized by SSCN 003928	07-30-01

ERU: /s/ M. Hehn 07-30-01

INTERNATIONAL SPACE STATION PROGRAM

PHYSICAL MEDIA, PHYSICAL SIGNALING & LINK-LEVEL PROTOCOL SPECIFICATIONS FOR ENSURING INTEROPERABILITY OF HIGH RATE DATA LINK STATIONS ON THE INTERNATIONAL SPACE STATION

25 MAY 2001

PREFACE

PHYSICAL MEDIA, PHYSICAL SIGNALING & LINK-LEVEL PROTOCOL SPECIFICATIONS FOR ENSURING INTEROPERABILITY OF HIGH RATE DATA LINK STATIONS ON THE INTERNATIONAL SPACE STATION

This document establishes a standard approach to be used by the International Space Station Program (ISSP) contractors, International Partners (IPs), and Integrated Product Teams (IPTs) to ensure the High Rate Data Link (HRDL) network will meet expected performance when integrated with the International Space Station (ISS).

The contents of this document are consistent with agreements defined in Joint Management Plans (JMPs) and Memoranda of Understanding between the National Aeronautics and Space Administration (NASA) and IPs; and tasks and products to be prepared by ISS Analyses and Integration Teams (AITs), IPTs and IPs. This document is under the control of the Space Station Control Board (SSCB), and any changes or revisions shall be approved by the SSCB.

_____ _____

Name Date
Title of Person
Organization

INTERNATIONAL SPACE STATION PROGRAM

PHYSICAL MEDIA, PHYSICAL SIGNALING & LINK-LEVEL PROTOCOL SPECIFICATIONS FOR ENSURING INTEROPERABILITY OF HIGH RATE DATA LINK STATIONS ON THE INTERNATIONAL SPACE STATION

25 MAY 2001

NASA/ESA

CONCURRENCE

NASA Program Manager	ESA Project Manager
Print Name	Print Name
Date	Date

INTERNATIONAL SPACE STATION PROGRAM

PHYSICAL MEDIA, PHYSICAL SIGNALING & LINK-LEVEL PROTOCOL SPECIFICATIONS FOR ENSURING INTEROPERABILITY OF HIGH RATE DATA LINK STATIONS ON THE INTERNATIONAL SPACE STATION

25 MAY 2001

NASA/NASDA

CONCURRENCE

NASA Program Manager	NASDA Program Manager
Print Name	Print Name
Date	Date

INTERNATIONAL SPACE STATION PROGRAM

PHYSICAL MEDIA, PHYSICAL SIGNALING & LINK-LEVEL PROTOCOL SPECIFICATIONS FOR ENSURING INTEROPERABILITY OF HIGH RATE DATA LINK STATIONS ON THE INTERNATIONAL SPACE STATION

25 MAY 2001

NASA/ASI

CONCURRENCE

NASA Program Manager	ASI Program Manager
Print Name	Print Name
Date	Date

INTERNATIONAL SPACE STATION PROGRAM

PHYSICAL MEDIA, PHYSICAL SIGNALING & LINK-LEVEL PROTOCOL SPECIFICATIONS FOR ENSURING INTEROPERABILITY OF HIGH RATE DATA LINK STATIONS ON THE INTERNATIONAL SPACE STATION

25 MAY 2001

CONCURRENCE

Prepared by:	John R. Woods PRINCIPAL ENGINEER, C&DH NETWORKS	C&DH Networks ORG
	/s/ John R. Woods SIGNATURE	5/18/01 DATE
Reviewed by:	Jeffrey S. Schikner MANAGER, STATION CONTROL	C&DH ORG
	/s/ Jeffrey S. Schikner SIGNATURE	5/30/01 DATE
Approved by:	David M. Pruett NASA AVIONICS & SOFTWARE	NASA Avionics & Software ORG
	/s/ David M. Pruett SIGNATURE	7/24/01 DATE
Approved by:	Paul A. Pinson MANAGER, C&DH NETWORKS	C&DH Networks ORG
	/s/ Paul A. Pinson SIGNATURE	5/18/01 DATE
Boeing DQA:	Paul A. Pinson MANAGER, C&DH NETWORKS	C&DH Networks ORG
	/s/ Paul A. Pinson SIGNATURE	5/18/01 DATE

INTERNATIONAL SPACE STATION PROGRAM

PHYSICAL MEDIA, PHYSICAL SIGNALING & LINK-LEVEL PROTOCOL SPECIFICATIONS FOR ENSURING INTEROPERABILITY OF HIGH RATE DATA LINK STATIONS ON THE INTERNATIONAL SPACE STATION

25 MAY 2001

LIST OF CHANGES

All changes to paragraphs, tables, and figures in this document are shown below:

Board Name	Entry Date	Change	Paragraph(s)
		SSCN 000470	All
		SSCN 003928	All

TABLE OF CONTENTS

PARAGRAPH	PAGE
1.0 INTRODUCTION	**1-1**
1.1 PURPOSE	1-1
1.2 SCOPE	1-2
1.3 PRECEDENCE	1-2
2.0 DOCUMENTS	**2-1**
2.1 APPLICABLE DOCUMENTS	2-1
2.2 REFERENCE DOCUMENTS	2-2
3.0 PERFORMANCE REQUIREMENTS	**3-1**
3.1 PHYSICAL SIGNALING	3-1
3.1.1 Transmitter Optical Characteristics	3-1
3.1.2 Receiver Optical Characteristics	3-3
3.1.3 Encoding	3-3
3.1.3.1 Data and Symbol Encoding	3-3
3.1.3.2 Special Symbol Encoding	3-5
3.1.3.2.1 SYNC Symbol	3-5
3.1.3.2.2 START Delimiter Symbol	3-5
3.1.3.2.3 END Delimiter Symbol	3-5
3.1.3.2.4 Invalid Symbols	3-5
3.2 PHYSICAL MEDIA	3-5
3.2.1 Connectors	3-5
3.2.2 Fiber-Optic Cable	3-6
3.2.2.1 Bend Radius	3-6
3.3 HRDL PROTOCOLS	3-6
3.3.1 HRDL Protocol Common Rules	3-6
3.3.1.1 HRDL State Diagram	3-6
3.3.1.1.1 Initialization State	3-7
3.3.1.1.2 Lock-on State	3-8
3.3.1.1.3 Data_Send State	3-8
3.3.1.1.4 Reconfigure State	3-9
3.3.1.2 General Data Rates	3-9
3.3.1.2.1 Allocated Data Rates	3-9
3.3.1.2.2 General Data Parsing Guidelines	3-10
3.3.1.2.2.1 Bursting (f:0)	3-10
3.3.1.2.2.2 Microbursting (d:s)	3-11
3.3.1.2.2.3 Evenly Distributing (1:s)	3-11
3.3.1.2.2.4 Unevenly Distributing (?:?)	3-12
3.3.2 Station-to-Station Protocol	3-12
3.3.3 Downlink Protocols	3-12
3.3.3.1 CCSDS Packet Protocol	3-12
3.3.3.1.1 CCSDS Packet Data Frames	3-12
3.3.3.1.1.1 CCSDS Packet Data Frame Sizes	3-13
3.3.3.1.1.2 CCSDS Packet Inter-Frame Gaps	3-13
3.3.3.1.2 Packet Data Rates	3-13
3.3.3.1.2.1 Minimum Required SYNC Symbols	3-14
3.3.3.1.2.2 Distribution of SYNC Symbols	3-14
3.3.3.1.2.2.1 Maximum Contiguous Data Transfer	3-14

3.3.3.1.2.2.2 Avoiding the MPDU FHP Problem 3-14
3.3.3.1.3 CCSDS Packet Format 3-15
3.3.3.1.3.1 CCSDS Packet Primary Header 3-16
3.3.3.1.3.2 CCSDS Packet Secondary Header 3-17
3.3.3.2 Bitstream Protocol 3-17
3.3.3.2.1 Bitstream Data Frames 3-17
3.3.3.2.1.1 Bitstream Data Frame Sizes 3-17
3.3.3.2.1.2 Bitstream Inter-Frame Gaps 3-17
3.3.3.2.2 Bitstream Data Rates 3-17
3.3.3.2.2.1 Minimum Required SYNC Symbols 3-18
3.3.3.2.2.2 Distribution of SYNC Symbols 3-18
3.3.3.2.2.2.1 Maximum Contiguous Data Bytes 3-18

4.0 VERIFICATION REQUIREMENTS 4-19

4.1 RESPONSIBILITY FOR VERIFICATION 4-20
4.2 VERIFICATION METHODS AND PHASES 4-20
4.2.1 VERIFICATION Methods 4-21
4.2.1.1 Inspection (I) 4-21
4.2.1.2 Analysis/Similarity (A) 4-21
4.2.1.3 Demonstration (D) 4-21
4.2.1.4 Test (T) 4-21
4.2.2 Verification Phases 4-21
4.2.2.1 Development Verification 4-21
4.2.2.2 Qualification Verification 4-22
4.2.2.3 Acceptance Verification 4-22
4.3 DETAILED VERIFICATION REQUIREMENTS 4-22
4.3.1 Transmitter Optical Waveform Verification 4-22
4.3.1.1 Transmitter Jitter Verification 4-23
4.3.2 Receiver Optical Waveform Verification 4-23
4.3.2.1 Receiver Bit Error Rate Verification 4-23
4.3.3 ORU Protocol, Data Rate and Data Parsing 4-24
4.4 VERIFICATION DOCUMENTATION 4-24
4.5 CERTIFICATION REQUIREMENTS 4-24

APPENDICES

APPENDIX A ACRONYMS AND ABBREVIATIONS A-1

APPENDIX B GLOSSARY OF TERMS B-1

APPENDIX C OPTICAL POWER ALLOCATION METHODOLOGY C-1

TABLES

Table 3.1-1, HRDL Transmitter Signal Requirements 3-2
Table 3.1-2, HRDL Receiver Signal Requirements 3-3
Table 3.1-3, 4B/5B NRZI Encoding 3-4
Table 3.1-4, 4B/5B NRZI Control Symbols 3-5
Table 3.3-2, Primary Header Definition 3-16
Table 4.0-1, Requirements Verification Matrix 4-19
Table 4.3-1, HRDL Transmitter Signal Verification Requirements 4-22
Table 4.3-2, HRDL Receiver Signal Verification Requirements 4-23

FIGURES

Figure 1.2-1, High Rate Data Link Design 1-1
Figure 3.1-1, HRDL 4B/5B Encoded Data/Symbol Waveform Envelope 3-1
Figure 3.3-1, Minimum HRDL Protocol State Diagram 3-7
Figure 3.3-2, Example of Evenly Parsed Data 3-11
Figure 3.3-3, HRDL CCSDS Packet Format & Framing 3-13
Figure 3.3-4, CCSDS Packet Format 3-15
Figure 3.3-5, HRDL Bitstream Format 3-17

1.0 INTRODUCTION

This document describes the performance specifications of the High Rate Data Link (HRDL) network on the International Space Station (ISS). The requirements of this document are derived from the ISS HRDL architecture. Growth options are not discussed in this document; however, the requirements defined herein support growth of the HRDL network.

1.1 PURPOSE

This document lists the minimum specifications and verification requirements necessary for ensuring that HRDL stations on the ISS are protocol compatible with other HRDL stations, and physically compatible with the HRDL physical media, the Automated Payload Switch (APS), Communications Outage Recorder (COR), and the High Rate Frame Multiplexer (HRFM).

This document was developed with the intent to provide a consolidated and consistent set of system-level and component-level design requirements and constraints for the HRDL architecture developers. Requirement exceptions, if granted for specific hardware items based on system-level analysis of the HRDL network, will be documented in the appropriate segment or end-item specification.

The HRDL is a simplex link composed of a transmit station and a receive station, linked by optical fiber and at least one of the two APSs, as shown Figure 1.2-1. As an exception to the described link, the COR is not required to transmit through an APS. The COR may transmit directly to the HRFM. The APS contains a receiver, matrix switch, and transmitter that re-clocks data to reduce jitter.

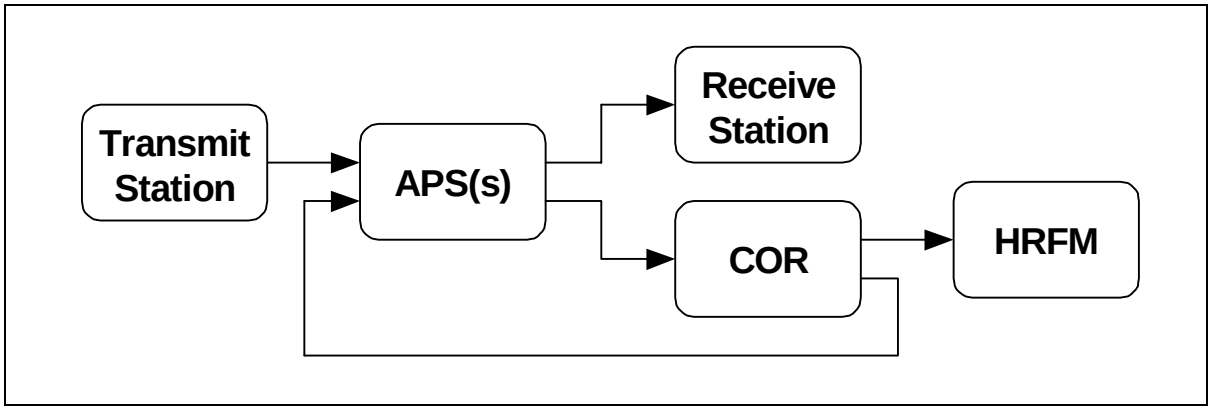

FIGURE 1.2-1, HIGH RATE DATA LINK DESIGN

1.2 SCOPE

This document describes the performance specifications of the High Rate Data Link (HRDL) network on the International Space Station (ISS). The requirements of this document are derived from the ISS HRDL architecture. Growth options are not discussed in this document; however, the requirements defined herein support growth of the HRDL network.

1.3 PRECEDENCE

In the event of a conflict between the text of this document and the documents referenced herein, the text of this document shall take precedence.

2.0 DOCUMENTS

2.1 APPLICABLE DOCUMENTS

The following documents include specifications, models, standards, guidelines, handbooks, and other special publications. The current issue of the following documents is identified in the Program Automated Library System (PALS) (http://issa-www.jsc.nasa.gov/cgi-bin/dsql+/ORAP?-h+palshome). The documents listed in this paragraph are applicable to the extent specified herein. Inclusion of applicable documents herein does not in any way supersede the order of precedence identified in Paragraph 1.3 of this document.

ANSI X3.255	Fibre Distributed Data Interface (FDDI) - Abstract Test Suite for FDDI Physical Medium Dependent Conformance Testing (PMD ATS)
CCSDS 701.0-B-2 Version: Blue Book	Consultative Committee for Space Data Systems (CCSDS) Recommendation for Space Data Systems Standards
ISO/IEC 9314-1	Fibre Distributed Data Interface (FDDI) - Token Ring Physical Layer Protocol (PHY)
ISO/IEC 9314-3	Fibre Distributed Data Interface (FDDI) - Token Ring Physical Layer Medium Dependent (PMD)
SSQ 21635	Connectors and Accessories, Electrical, Circular, Miniature, IVA/EVA/Robot Compatible, Space Quality, General Specification for
SSQ 21636	Connectors and Accessories, Electrical, Rectangular, Rack and Panel, Space Quality, General Specification for
SSQ 21654	Cable, Single Fiber, Multimode, Space Quality, General Specification for
SSP 52050	Software Interface Control Document Part 1, International Standard Payload Rack To International Space Station

2.2 REFERENCE DOCUMENTS

The following documents contain supplemental information to guide the user in the application of this document. These reference documents may or may not be specifically cited within the text of this document.

SSQ 21637	Connectors and Accessories, Electrical, Umbilical Interface, Environmental, Space Quality, General Specification for
SSP 30312	Electrical, Electronic, and Electromechanical Parts Management and Implementation Plan for Space Station Program

3.0 PERFORMANCE REQUIREMENTS

3.1 PHYSICAL SIGNALING

The physical signaling requirements are applicable at the Orbital Replaceable Unit (ORU) interface, over the entire operating conditions of the ORU.

HRDL transmitters and receivers shall [1] be designed for compatibility with the HRDL Fiber Optic cable as defined in section 3.2.2 of this document.

3.1.1 TRANSMITTER OPTICAL CHARACTERISTICS

The HRDL transmitter shall [1] transmit optical waveforms on the HRDL network within the signal envelope presented in **Figure 3.1-1**. The HRDL transmitter shall [2] meet the optical requirements listed in **Table 3.1-1**.

NOTE

The HRDL optical waveform is identical to the waveform specified in ISO/IEC 9314-3, Figure 10.

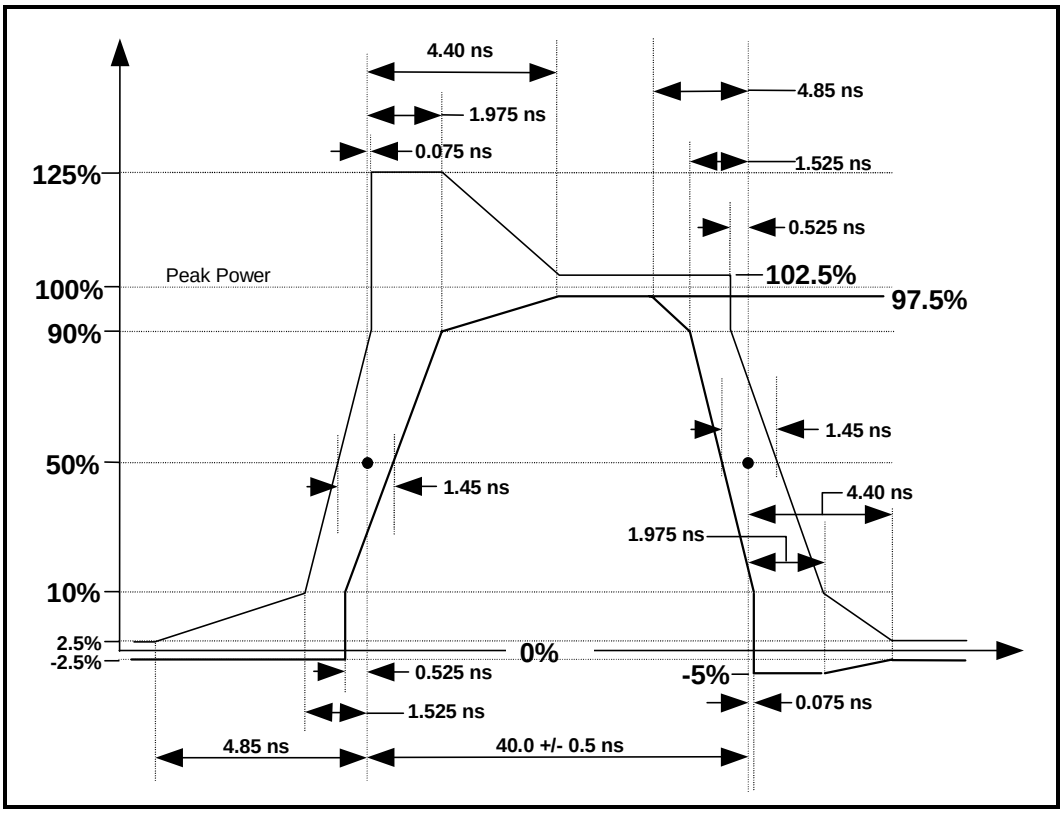

FIGURE 3.1-1, HRDL 4B/5B ENCODED DATA/SYMBOL WAVEFORM ENVELOPE

TABLE 3.1-1, HRDL TRANSMITTER SIGNAL REQUIREMENTS

Parameter	Value	Notes
Nominal Transmitter Pulse Duration	8 ns	
Signaling Rate	125 MBaud +/- 0.1%	Signaling rate independent of data rate. As specified in ISO/IEC 9314-1:1988 para. 5.2.7.
Optical Center Wavelength	1270 to 1380 nm	As specified in ISO/IEC 9314-3:1990 Table 1
Optical Spectral Width	180 nm maximum	Tailored requirement
Transmitted Signal Extinction Ratio	5% maximum	Tailored requirement; consistent with MDA Transmitter Hybrid specification.
Transmitter Waveform Rise Time	3.0 ns maximum (1)	Tailored requirement
Transmitter Waveform Fall Time	3.0 ns maximum (1)	Tailored requirement
Transmitter Total Jitter	2.36 ns peak-peak maximum	Sum of duty cycle distortion, data dependent jitter, and random jitter, as specified in ISO/IEC 9314-3:1990 Table 1
(1) The transmitter waveform rise and fall times are more constraining than the waveform figure. The HRDL transmit station must comply with both the waveform and the more constraining rise/fall times.		

3.1.2 RECEIVER OPTICAL CHARACTERISTICS

The HRDL receiver shall [1] be capable of receiving optical signals conforming to the optical signal envelope shown in Figure 3.1-1 and shall [2] meet the signal requirements listed in Table 3.1-2.

TABLE 3.1-2, HRDL RECEIVER SIGNAL REQUIREMENTS

Parameter	Value	Notes
Nominal Received Pulse Duration	8 ns	
Signaling Rate	125 Mbaud +/- 0.1%	Signaling rate independent of data rate. As specified in ISO/IEC 9314-1:1988 para. 5.2.7.
Optical Center Wavelength	1270 to 1380 nm	As specified in ISO/IEC 9314-3:1990 Table 2
Optical Spectral Width	180 nm minimum	Tailored requirement
Received Signal Extinction Ratio	10% maximum	
Received Waveform Rise Time	3.5 ns maximum	Tailored requirement
Received Waveform Fall Time	3.5 ns maximum	Tailored requirement
Received Total Jitter	2.96 ns peak-peak maximum	Sum of duty cycle distortion, data dependent jitter, and random jitter, as specified in ISO/IEC 9314-3:1990 Table 2
Receiver Bit Error Rate (BER)	1.0E-9	When receiving the optical signal whose envelope and optical characteristics are described herein

3.1.3 ENCODING

3.1.3.1 DATA AND SYMBOL ENCODING

HRDL transmit stations shall [1] encode data and applicable symbols as 4B/5B NRZI (Non Return to Zero Invert on Ones) symbols as specified in Table 3.1-3. HRDL receive stations shall [2] decode data and applicable symbols from 4B/5B NRZI (Non Return to Zero Invert on Ones) symbols as specified in Table 3.1-3.

NOTE

The 4B/5B encoding scheme allows for a stable clocking of the optical waveform. With stable clocking, each transition (high-to-low or low-to-high) represents the transmission of a logical “one”. The data and symbol encoding is derived from ISO/IEC 9314-1 Table 1.

TABLE 3.1-3, 4B/5B NRZI ENCODING

Decimal Value	Symbol	Binary Data (MSB=>LSB)	4B/5B NRZI Encoded Data (MSB=>LSB)	Notes
				Data Symbols
30	0	0000	11110	Data
09	1	0001	01001	Data
20	2	0010	10100	Data
21	3	0011	10101	Data
10	4	0100	01010	Data
11	5	0101	01011	Data
14	6	0110	01110	Data
15	7	0111	01111	Data
18	8	1000	10010	Data
19	9	1001	10011	Data
22	A	1010	10110	Data
23	B	1011	10111	Data
26	C	1100	11010	Data
27	D	1101	11011	Data
28	E	1110	11100	Data
29	F	1111	11101	Data
				Other Symbols
04	H		00100	Symbol (Halt)
31	I		11111	Symbol (Idle)
24	J		11000	Symbol (Sync, 1st symbol)
17	K		10001	Symbol (Sync, 2nd symbol)
00	Q		00000	Symbol (Quiet)
07	R		00111	Symbol (Reset)
25	S		11001	Symbol (Set)
13	T		01101	Symbol (Terminate)
				Invalid Codes
01	V or H		00001	Also interpreted as Halt
02	V or H		00010	Also interpreted as Halt
03	V		00011	
05	V		00101	
06	V		00110	
08	V or H		01000	Also interpreted as Halt
12	V		01100	
16	V or H		10000	Also interpreted as Halt

NOTE

Symbols are presented on link Most Significant Bit (MSB) first.

3.1.3.2 SPECIAL SYMBOL ENCODING

Special HRDL symbols are shown in Table 3.1-4. Specific uses of these symbols are defined in the following subparagraphs.

TABLE 3.1-4, 4B/5B NRZI CONTROL SYMBOLS

Symbol Type	Symbols	4B/5B NRZI Encoded Data
		MSB=>LSB
SYNC	J-K	11000 10001
START Delimiter	S-R	11001 00111
END Delimiter	R-S	00111 11001

NOTE

Symbols are presented on link MSB first.
Use of these symbols is dependent on the protocol being implemented.

3.1.3.2.1 SYNC SYMBOL

HRDL stations shall [1] use the SYNC symbol, as shown in Table 3.1-4, as a signal to keep link receivers acquired when data or Delimiters are not present on the link.

3.1.3.2.2 START DELIMITER SYMBOL

HRDL stations shall [1] use the START Delimiter symbol, as shown in Table 3.1-4, only to mark the beginning of a CCSDS Packet data frame.

3.1.3.2.3 END DELIMITER SYMBOL

HRDL stations shall [1] use the END Delimiter symbol, as shown in Table 3.1-4, only to mark the end of a CCSDS Packet data frame.

3.1.3.2.4 INVALID SYMBOLS

HRDL stations shall [1] prohibit the use of Invalid codes, as shown in Table 3.1-3.

3.2 PHYSICAL MEDIA

The physical media requirements are applicable to all hardware components of the HRDL network.

3.2.1 CONNECTORS

HRDL connectors shall [1] be selected from ISS SSQ connectors, or meet/exceed the performance of the SSQ connectors.

3.2.2 FIBER-OPTIC CABLE

HRDL cable shall [1] be as specified in SSQ 21654, or meet/exceed the performance of the SSQ cable.

NOTE

HRDL ORUs are permitted to use SSQ 21654-equivalent HRDL cable internal to the ORU without outer jacketing or strength member.

3.2.2.1 BEND RADIUS

The HRDL minimum cable bend radius, as derived from SSQ 21654 paragraph 3.10.5, shall [1] be a minimum of two inches, except where protected by a connector backshell, where a one half inch radius is permitted for bends of 90-degrees or less.

3.3 HRDL PROTOCOLS

The HRDL network protocols are simple point-to-point protocols to ensure simplex communications. The protocols are divided into two protocol groups that provide sub-protocols for different data structures and destinations.

1. Station-to-Station protocol provides for open communications between transmit stations and receive stations.
2. Downlink protocols have specific requirements for data travelling to the United States On-Orbit Segment (USOS) Ku-Band system for downlink to the ground.

NOTE

The downlink protocols are more restrictive than the station-to-station protocol, but must be observed in order to use the USOS Ku-Band system.

3.3.1 HRDL PROTOCOL COMMON RULES

The rules in the following subparagraphs are common to all HRDL protocols. More specific rules may pertain to the protocol being implemented.

3.3.1.1 HRDL STATE DIAGRAM

The minimum HRDL protocol state diagram is shown in Figure 3.3-1. Transitions between the states shown in this diagram, shall [1] occur only between states that are linked by arrows and only in the direction of these arrows. Transition from a state shall [2] be allowed only after the exit criteria have been met.

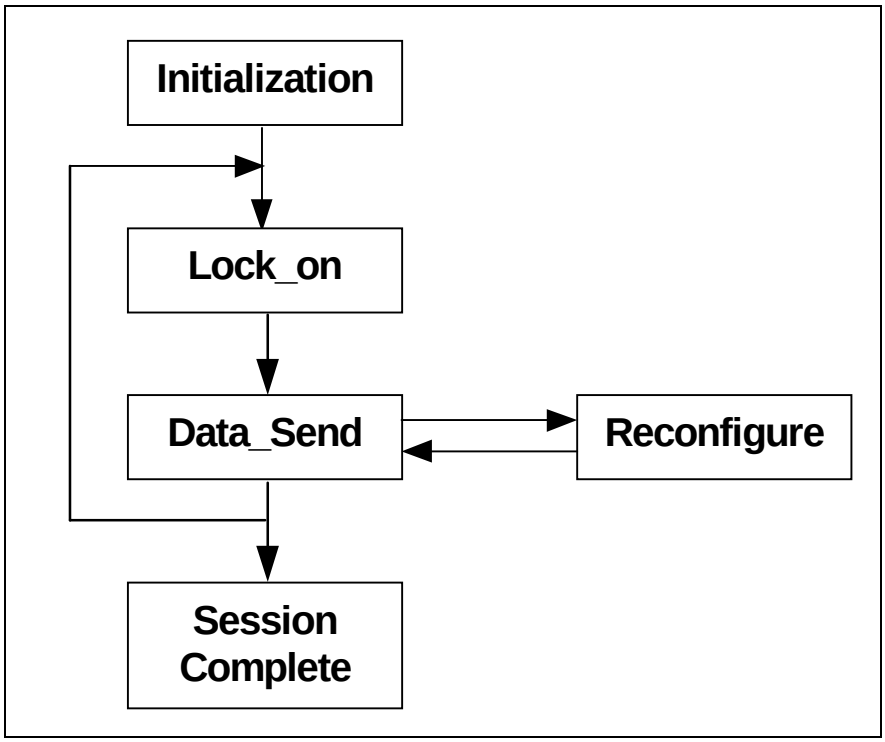

FIGURE 3.3-1, MINIMUM HRDL PROTOCOL STATE DIAGRAM

3.3.1.1.1 INITIALIZATION STATE

The Initialization State defines the actions that HRDL users must take prior to initiating communications between transmit and receive stations. As a minimum, Equipment in the HRDL link will provide the following capabilities as appropriate:

- The HRDL transmit station shall [1] provide the capability to apply power to its HRDL transmitter circuitry via commands, and establish the transmit data rate and data framing formats via commands.
- The APS shall [2] provide the capability to apply power to its HRDL transmitter and receiver circuitry via commands, establish the station-to-station HRDL routing path through the APS via commands.
- The HRDL receive station shall [3] provide the capability to apply power to its HRDL receiver circuitry via commands, and establish the receive data rate and data framing formats via commands.

The Initialization State shall [4] be considered complete when the transmit station, receive station, and the APS (if required) have been initialized, and a HRDL physical path between them has been established.

3.3.1.1.2 LOCK-ON STATE

In the Lock-on State, the transmit station shall [1] send a minimum of 2400 SYNC symbols (i.e., 192 microseconds) or 192 microseconds of user data over the HRDL network via the APS to the receive station in order to ensure that their receivers are locked. The Lock-on State is consistent with the Phase Locked Loop (PLL) State, as described in the Transparent Asynchronous Transmitter-Receiver Interface (TAXI) vendor documentation.

WARNING

The APS may not properly lock onto TAXI SYNC symbols in the Lock-on State. It has been shown that a poor signal lock can result in lost data. It is highly recommended that transmit stations provide the capability to command data symbols onto the link during the Lock-on State. The amount of data required to provide proper lock will depend on data density, or data to SYNC symbol ratio.

NOTE

Due to the fact that the APS may not lock on during the lock on state, the designers of receiving stations should consider reporting TAXI errors in telemetry. This will provide visibility of the condition to the ground.

3.3.1.1.3 DATA_SEND STATE

HRDL stations shall [1] remain in the Data_Send State while transmitting data according to the data transmission rules established for the protocol in use. Data rates and data framing formats will be set prior to transmission.

While in the Data_Send State, the HRDL transmit station shall [2] transmit SYNC symbols on the HRDL link whenever data or Delimiter symbols are not present.

The Data_Send State shall [3] be considered complete when the data transmission is complete, or a reconfiguration command has been received.

- If the data transmission is complete, the transmit station, receive station, and the APS can terminate this HRDL transmission.
- If a reconfiguration command has been received, transition to the Reconfigure State will occur at the end of the current data frame.

NOTE

Due to the nature of space to ground communications, the designer should consider providing the ability to re-send any data critical to the successful completion of experimentation on orbit. The designer should

give some consideration to waiting to send data in the data send state until commanded. This will allow the health of the data link to be by the command and data handling system operators on the ground prior to the transmission of data.

3.3.1.1.4 RECONFIGURE STATE

The transmit station and receive station shall [1] transition to the Reconfigure State in order to modify the data rate via commands. In this state, the transmit station shall [2] present a contiguous stream of SYNC symbols and no other symbols or data on the HRDL network in order to keep the receive station locked.

The Reconfigure state shall [3] be considered complete when the transmit station and the receive station have been initialized with the new data rate and/or protocol rules.

3.3.1.2 GENERAL DATA RATES

HRDL stations shall [1] provide the capability to transmit and/or receive a signaling rate of 125 Mbps using the 4B/5B NRZI encoded data scheme as defined in section 3.1.3 Encoding. This corresponds to a 100 Mbps user data rate.

NOTE

Space Station data rates, through the HRFM, are currently adjusted in 0.43195 Mbps increments. The transmit station's data rate should be adjustable in steps that minimize bandwidth waste through the HRFM.

3.3.1.2.1 ALLOCATED DATA RATES

The transmit station shall [1] limit the maximum user data rate to the negotiated (i.e., allocated) data rate. The allocated user data rate is determined by negotiation between the parties responsible for the transmit station and the receive station. Since the signaling rate is fixed, the transmit station's data rate shall [2] be adjusted to data rates less than 100 Mbps by parsing the data with SYNC and/or Delimiter symbols.

NOTE

Due to parsing requirement limitations, certain data rates are unachievable based on packet size. An approximation for the maximum attainable data rate can be calculated using the following rate equation.

$$Max_Rate = \left[\frac{Data_Size}{Data_Size * 1.05 + 27} \right] * 100 Mbps$$

3.3.1.2.2 GENERAL DATA PARSING GUIDELINES

The following subparagraphs describe the basic concepts of different parsing techniques. For purposes of discussion, the term data frame is used to describe a physical block of data being transferred. Detailed requirements for parsing data are discussed in each specific protocol section.

When calculating the number of SYNC symbols required to bring the data rate down to the allocated data rate, other symbols (START and END Delimiters) should be considered. There are numerous ways of parsing data frames with SYNC symbols, and they tend to overlap at the fringes.

- Evenly Distributing (1:s) – each data byte is interleaved with ‘s’ SYNC symbols.
- Unevenly Distributing (?:?) – no consistent relationship between data and SYNC symbols.
- Bursting (f:0) – the entire data frame is transmitted prior to any SYNC symbols.
- Microbursting (d:s) – ‘d’ data bytes are consistently interleaved with ‘s’ SYNC symbols.

The modulated output rate can be calculated from the following basic rate equation:

$$rate = \left[\frac{data_bytes}{data_bytes + parsing_symbols} \right] * 100 Mbits / \sec$$

Where;

- *data_bytes* is the number of bytes in the data frame, and
- *parsing_symbols* is the number of SYNC symbols and Delimiter symbols inserted between the start of one data frame and the start of the next data frame.

3.3.1.2.2.1 BURSTING (f:0)

When bursting data, all data in the current data frame is transmitted prior to any SYNC symbols. After the data frame has been transmitted, SYNC symbols are transmitted to average the data rate down to the allocated rate.

3.3.1.2.2.2 MICROBURSTING (d:s)

When microbursting data, data is interleaved with SYNC symbols, but not necessarily at the single byte level. Table 3.3-1 shows a variety of parsing structures that result in 5 Mbps steps. To fine-tune the data rate, additional SYNC symbols may be inserted as required to bring the average data rate down to the allocated data rate. Usually these are inserted between data frames.

Table 3.3-1, Typical Parsing Structures

Parsing Method	Data Rate Mbps	Parsing Method	Data Rate Mbps	Parsing Method	Data Rate Mbps	Parsing Method	Data Rate Mbps
1:0	100	3:1	75	1:1	50	1:3	25
19:1	95	7:3	70	9:11	45	1:4	20
9:1	90	13:7	65	2:3	40	3:17	15
17:3	85	3:2	60	7:13	35	1:9	10
4:1	80	11:9	55	3:7	30	1:19	5

NOTE

Depending on the protocol being used, there may be requirements for an inter-frame gap. This should be taken into account when calculating the total minimum required SYNC symbols to interleave with data.

3.3.1.2.2.3 EVENLY DISTRIBUTING (1:s)

When evenly distributing data, a consistent number of SYNC symbols are introduced after every data byte within the data frame, to average the data rate down to the allocated rate. Additional SYNC symbols are introduced at the end of the data frame to bring the data rate down to the allocated data rate.

An example of evenly parsed data corresponding to a transmitted data rate of 20 Mbps is shown in Figure 3.3-2. In this example, a 1:4 parsing scheme is used.

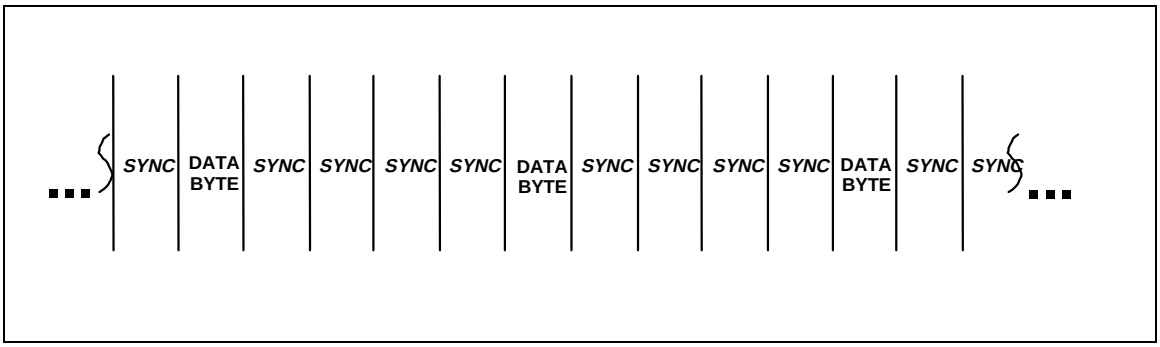

FIGURE 3.3-2, EXAMPLE OF EVENLY PARSED DATA

3.3.1.2.2.4 UNEVENLY DISTRIBUTING (?:?)

When unevenly distributing data, SYNC symbols are introduced in an inconsistent manner within the data frame, to average the data rate down to the allocated rate. This can be useful when data is being clocked to the transmitting device, and SYNC symbols are automatically introduced when data is not present.

NOTE

It is strongly recommended that users avoid using the unevenly distributing parsing method for downlink protocol.

3.3.2 STATION-TO-STATION PROTOCOL

The station-to-station protocol allows users to develop their own data transmission structures. There are no special requirements beyond section 3.3.1 , HRDL Protocol Common Rules, for operating under this protocol. It is assumed that the transmit station (user) understands any limitations of the receive station, and can operate within any boundaries therein.

3.3.3 DOWNLINK PROTOCOLS

HRDL stations that require a high rate telemetry downlink interface, through the USOS Ku-Band system, will operate under the downlink protocols. Downlink protocols consist of two rigidly defined protocols: the Consultative Committee for Space Data Systems (CCSDS) Packet protocol and bitstream protocol.

3.3.3.1 CCSDS PACKET PROTOCOL

HRDL transmit stations must comply with the rules and requirements of this section when implementing CCSDS Packet protocol.

3.3.3.1.1 CCSDS PACKET DATA FRAMES

In CCSDS Packet protocol, the HRDL transmit station shall [1] implement data frames as shown in Figure 3.3-3. START and END Delimiters, as defined in section 3.1.3.2 , shall [2] be used to denote the beginning and end of a data frame. An inter-frame gap shall [3] be placed between the end of one data frame and the start of the next data frame.

WARNING

Packets that are not properly framed with START and END Delimiters may be rejected by down stream ORUs.

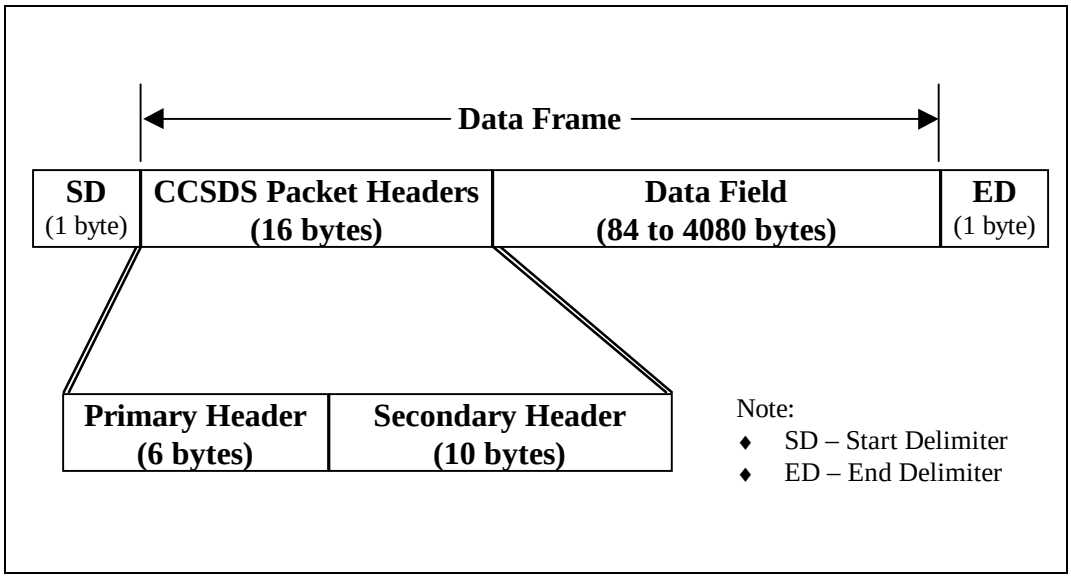

FIGURE 3.3-3, HRDL CCSDS PACKET FORMAT & FRAMING

3.3.3.1.1.1 CCSDS PACKET DATA FRAME SIZES

CCSDS Packet data frames shall [1] consist of an even number of bytes, between 100 and 4096 (inclusive), including the primary and secondary packet headers.

WARNING

The HRFM will discard all packets that are in odd byte counts. Additionally, the HRFM will assign an incorrect MPDU First Header Pointer of 07FF (hex) instead of 0442 (hex) if the following three conditions are met: a packet crosses an MPDU boundary (>1090 bytes), ends with two bytes remaining open in the MPDU, and is parsed at d:n; where d >=3 and n >=1. Refer to section 3.3.3.1.2.2.2 , to understand how to protect against this condition. Corruption of the FHP can result in multiple packets being discarded in ground processing.

3.3.3.1.1.2 CCSDS PACKET INTER-FRAME GAPS

A minimum of 25 SYNC symbols shall [1] be transmitted between the end of one packet (RS) and the start of the next (SR) packet (the *inter-packet gap*).

3.3.3.1.2 PACKET DATA RATES

Transmit stations shall [1] modulate the HRDL data rate by the insertion of TAXI “sync” symbols in the data stream.

3.3.3.1.2.1 MINIMUM REQUIRED SYNC SYMBOLS

For a given allocated data rate (*rate*) and packet size (*frame_size*), a minimum number of SYNC symbols (*# syncs*) shall [1] be inserted between the START symbol (SR) of one packet and the START symbol (SR) of the next packet, given by the equation:

$$\#syncs = ceiling\left[\frac{frame_size}{rate/(100Mbits/\sec)}\right] - frame_size - 2$$

Where, the *ceiling* function selects the next integral value greater than or equal to the expression within the brackets.

3.3.3.1.2.2 DISTRIBUTION OF SYNC SYMBOLS

Distribution of the minimum required SYNC symbols, as defined in section 3.3.3.1.2.1 , within the data frame and inter-frame gap shall [1] conform to the following constraints:

- First, allocation of SYNC symbols shall [2] go to the minimum inter-frame gap, as stated in section 3.3.3.1.1.2 .
- Next, allocation of SYNC symbols shall [3] follow the maximum contiguous data transfer rule in section 3.3.3.1.2.2.1 .
- Finally, the remaining SYNC symbols shall [4] be distributed across the data frame and inter-frame gap, in order to lower the instantaneous data rate.

NOTE

Maximum data rates may not be achievable for smaller packet sizes.

3.3.3.1.2.2.1 MAXIMUM CONTIGUOUS DATA TRANSFER

No more than 20 contiguous data bytes shall [1] be transmitted before at least one SYNC symbol is inserted in the data stream.

3.3.3.1.2.2.2 AVOIDING THE MPDU FHP PROBLEM

During any single Data_Send session, only one of the following schemes shall [1] be implemented for any given HRFM channel.

- Packet sizes varying or fixed between 100 to 1090 bytes (inclusive) – there is no concern.
- Packets on 4-byte boundaries, sizes don’t matter – there is no concern.
- Packets on 2-byte boundaries that have fixed or varying sizes between 100 to 4096 bytes (inclusive) – the transmit station shall [2] parse the data in a 1:n or 2:n structure (one or two data bytes and then one or more SYNC symbols).

3.3.3.1.3 CCSDS PACKET FORMAT

CCSDS Packet data frames shall [1] adhere to the structure shown in Figure 3.3-4, and stated in the following subparagraphs.

Field ID	Wd #	MSB															LSB
Primary Header	1	Version ID (000)			Type	Sec Hdr Flag (1)	Application Process ID (APID)										
	2	Seq. Flags	Packet Sequence Count														
	3	Packet Length (# octets - 1 following this field)															
Secondary Header	4	Time (MSBs of Coarse Time)															
	5	Time (LSBs of Coarse Time, LSB = 1 second)															
	6	Fine Time								Time ID	Chk wrd	ZOE TLM	Packet Type				
	7	Spare	Element ID				Packet ID Word #1 (Element and Usage Dependent)										
	8	Packet ID Word #1 (Element and Usage Dependent)															
User Data	9	User Data Word #1															
	n-1	User Data Word #n-1															
Checkword	n	User Data Word #n - Checkword (optional depending on the value in the Checkword bit in word 6)															

FIGURE 3.3-4, CCSDS PACKET FORMAT

3.3.3.1.3.1 CCSDS PACKET PRIMARY HEADER

In CCSDS Packet mode, the HRDL transmit station shall [1] implement a CCSDS Packet primary header as a part of the CCSDS packet. The structure of the CCSDS Packet primary header shall [2] be as shown in the tables below, and as described in CCSDS 701.0-B-2.

Warning

Receiving devices may reject CCSDS packets whose actual received packet length does not correlate to the Packet Length field in the primary header.

TABLE 3.3-2, PRIMARY HEADER DEFINITION

Word 1		
Field	**Values**	**Description**
Version ID (3 bits)	(‘000’B)	Indicates CCSDS Version-1
Type (1 bit)	‘0’B – Core APID ‘1’B – Payload APID	Distinguishes between core and payload packet types to extend the APID space to 4064
Secondary Header Flag (1 bit)	‘0’B – No secondary header ‘1’B – Secondary header present	Indicates whether, or not, a Secondary Header follows the primary header
Application Process ID (11 bits)	0 – 2031, (2032 – 2047 reserved per CCSDS recommendation)	Used in conjunction with Type to define the Logical Data Path.
Word 2		
Field	**Values**	**Description**
Sequence Flags (2 bits)	Valid values are: ‘00’B = Continuation segment ‘01’B = First segment ‘10’B = Last segment ‘11’B = Unsegmented data	Not used by C&DH. May be used per Source/Destination ICDs. Always set to ‘11’B for USOS packets.
Packet Sequence Count (14 bits)		Sequential count, which numbers each packet on a Logical Data Path, i.e., a separate counter is maintained for each source-destination pair.
Word 3		
Field	**Values**	**Description**
Packet Length (16 bits)	The value is the number of bytes (octets) following this field minus 1.	Sequential count which expresses the length of the remainder of the packet including Checkword if present.

3.3.3.1.3.2 CCSDS PACKET SECONDARY HEADER

In CCSDS Packet mode, the HRDL transmit station shall [1] implement a CCSDS Packet Secondary Header as a part of the CCSDS packet per Paragraph 3.1.3.2, CCSDS Secondary Header Format, of SSP 52050.

3.3.3.2 BITSTREAM PROTOCOL

HRDL transmit stations must comply with the rules and requirements of this section when implementing Bitstream protocol.

3.3.3.2.1 BITSTREAM DATA FRAMES

In Bitstream protocol, the HRDL transmit station shall [1] transmit data on the HRDL network as bitstream data, containing no TAXI START or END Delimiters. The only valid symbols for transmission are data symbols and SYNC symbols. From the bitstream, the user shall [2] define physical blocks (data frames), which are separated by an inter-frame gap (SYNC symbols), as illustrated in Figure 3.3-5.

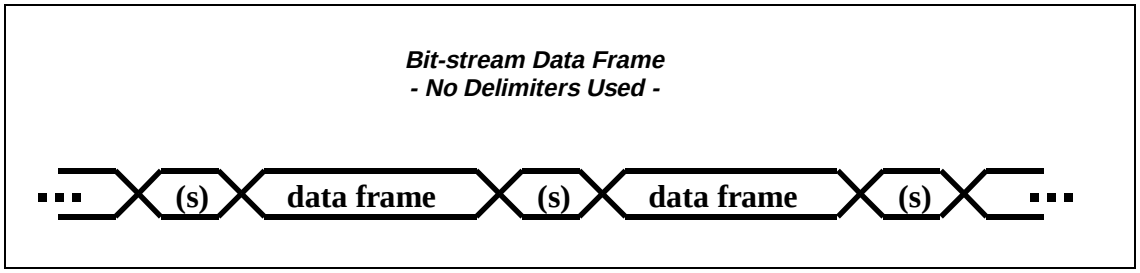

FIGURE 3.3-5, HRDL BITSTREAM FORMAT

WARNING

The HRFM will load a value of 07FF (hex), rather than the expected value 3FFF (hex) into the “Bitstream Pointer” field of all BPDU headers that contain a full data field (8736 data bits).

3.3.3.2.1.1 BITSTREAM DATA FRAME SIZES

Bitstream data frames shall [1] be user definable and consist of an even number of bytes up to 4096.

3.3.3.2.1.2 BITSTREAM INTER-FRAME GAPS

A minimum of 25 SYNC symbols shall [1] be inserted after the data frame transmission.

3.3.3.2.2 BITSTREAM DATA RATES

Transmit stations shall [1] modulate the HRDL data rate by the insertion of TAXI “sync” symbols in the data stream. The transmit station shall [2] average the data rate down to

the allocated data rate (maximum 95 Mbps) over the period from the beginning of one data frame to the beginning of the next data frame. This can be accomplished by parsing the data and/or placing SYNC symbols in the inter-frame gap.

3.3.3.2.2.1 MINIMUM REQUIRED SYNC SYMBOLS

For a given allocated data rate (*rate*) and data frame size (*frame_size*), a minimum number of SYNC symbols (*# syncs*) shall [1] be inserted between the start of one data frame and the start of the next data frame, given by the equation:

$$\#syncs = ceiling\left[\frac{frame_size}{rate/(100Mbits/\sec)}\right] - frame_size$$

Where, the *ceiling* function selects the next integral value greater than or equal to the expression within the brackets.

3.3.3.2.2.2 DISTRIBUTION OF SYNC SYMBOLS

Distribution of the minimum required SYNC symbols, as defined in section 3.3.3.2.2.1 , within the data frame and inter-frame gap, shall [1] conform to the following constraints:

- First, allocation of SYNC symbols shall [2] go to the minimum inter-frame gap, as stated in section 3.3.3.2.1.2 .
- Next, allocation of SYNC symbols shall [3] follow the maximum contiguous data transfer rule in section 3.3.3.2.2.2.1 .
- Finally, the remaining SYNC symbols shall [4] be distributed across the data frame and/or inter-frame gap, in order to lower the instantaneous data rate to the allocated data rate.

3.3.3.2.2.2.1 MAXIMUM CONTIGUOUS DATA BYTES

No more than 1092 contiguous data bytes shall [1] be transmitted before Sync symbols are inserted in data stream. SYNC symbols shall [2] be inserted in the data stream, as follows:

- When parsing with d:s where 1 <=d<= 135 data bytes, at least one SYNC symbol (s) shall [3] be inserted before more data can be transmitted.
- When parsing with d:s where 136 <=d<= 1092 data bytes, at least 25 SYNC symbols (s) shall [4] be inserted before more data can be transmitted.

NOTE

If data frame is greater than or equal to 136 and less than or equal to 1092, the 25 SYNC symbols will account for the minimum inter-frame gap.

4.0 VERIFICATION REQUIREMENTS

Table 4.0-1 identifies the Section 4 verification requirements for the Section 3 specifications presented in this document.

TABLE 4.0-1, REQUIREMENTS VERIFICATION MATRIX

REQUIREMENT VERIFICATION CROSS REFERENCE MATRIX						
VERIFICATION METHOD NA=NOT APPLICABLE I=INSPECTION A=ANALYSIS D=DEMONSTRATION T=TEST	VERIFICATION METHOD APPLICABILITY: (I.E., WHEN CONDUCTED) A=ACCEPTANCE Q=QUALIFICATION			EQUIPMENT LEVEL OF APPLICABILITY: C=COMPONENT E=ELEMENT O=ORU R=RACK		
SECTION 3 REQUIREMENT	**EQUIP LEVEL**	**VERIFICATION METHOD**				
PARAGRAPH	C/E/O/R	NA	I	A	D	T
3.0 Performance Requirements		X				
3.1 Physical Signaling	C or O			Q		
3.1.1 Transmitter Optical Character.	C or O					A & Q
3.1.2 Receiver Optical Character.	C or O					A & Q
3.1.3 Encoding		X				
3.1.3.1 Data and Symbol Encoding	O				A	Q
3.1.3.2 Special Symbol Encoding		X				
3.1.3.2.1 SYNC Symbol	O					A & Q
3.1.3.2.2 START Delimiter Symbol	O					A & Q
3.1.3.2.3 END Delimiter Symbol	O					A & Q
3.1.3.2.4 Invalid Symbols	O					A & Q
3.2 Physical Media		X				
3.2.1 Connectors	E		A & Q			
3.2.2 Fiber-Optic Cable	E or O		A & Q			
3.2.2.1 Bend Radius	E or O		A & Q			
3.3 HRDL Protocols		X				
3.3.1 HRDL Protocol Common Rules		X				
3.3.1.1 HRDL State Diagram	O			A & Q		
3.3.1.1.1 Initialization State	O			A & Q		
3.3.1.1.2 Lock-on State	O			A & Q		
3.3.1.1.3 Data_Send State	O			A & Q		
3.3.1.1.4 Reconfigure State	O			A & Q		
3.3.1.2 General Data Rates	O			A & Q		
3.3.1.2.1 Allocated Data Rates	O			A & Q		
3.3.1.2.2 General Data Parsing Guidelines		X				
3.3.1.2.2.1 Bursting (f:0)		X				
3.3.1.2.2.2 Microbursting (d:s)		X				
3.3.1.2.2.3 Evenly Distributing (1:s)		X				
3.3.1.2.2.4 Unevenly Distributing (?:?)		X				

3.3.2 Station-to-Station Protocol		X				
3.3.3 Downlink Protocols		X				
3.3.3.1 CCSDS Packet Protocol		X				
3.3.3.1.1 CCSDS Packet Data Frames	O				A	Q
3.3.3.1.1.1 CCSDS Packet Data Frame Sizes	O				A	Q
3.3.3.1.1.2 CCSDS Packet Inter-Frame Gaps	O				A	Q
3.3.3.1.2 Packet Data Rates	O				A	Q
3.3.3.1.2.1 Minimum Required SYNC Symbols	O				A	Q
3.3.3.1.2.2 Distribution of SYNC Symbols	O				A	Q
3.3.3.1.2.2.1 Maximum Contiguous Data Transfer	O				A	Q
3.3.3.1.2.2.3 Avoiding the MPDU FHP Problem	O				A	Q
3.3.3.1.3 CCSDS Packet Format	O				A	Q
3.3.3.1.3.1 CCSDS Packet Primary Header	O				A	Q
3.3.3.1.3.2 CCSDS Packet Secondary Header	O				A	Q
3.3.3.2 Bitstream Protocol		X				
3.3.3.2.1 Bitstream Data Frames	O				A	Q
3.3.3.2.1.1 Bitstream Data Frame Sizes	O				A	Q
3.3.3.2.1.2 Bitstream Inter-Frame Gaps	O				A	Q
3.3.3.2.2 Bitstream Data Rates	O				A	Q
3.3.3.2.2.1 Minimum Required SYNC Symbols	O				A	Q
3.3.3.2.2.2 Distribution of SYNC Symbols	O				A	Q
3.3.3.2.2.2.1 Maximum Contiguous Data Bytes	O				A	Q

4.1 RESPONSIBILITY FOR VERIFICATION

The supplier shall be responsible for the verification of all requirements.

All levels of customers shall have the right to witness all required verifications.

4.2 VERIFICATION METHODS AND PHASES

Verification of the Section 3 requirements shall be performed by the methods and phases defined in this section.

4.2.1 VERIFICATION METHODS

4.2.1.1 INSPECTION (I)

Inspection is a verification method of physical characteristics that determines compliance without the use of special laboratory equipment, procedures, test support items, or services. Inspection uses standard methods, such as visual gages, etc., to verify compliance with documented design requirements.

Inspection also includes the inspection of design documents, material lists, code, plans, etc., so as to verify that requirements have been met.

4.2.1.2 ANALYSIS/SIMILARITY (A)

Analysis is a verification method that uses techniques and tools, such as math models, prior test data, simulations, and analytical assessments.

Verification by a similarity analysis is acceptable if the subject article is similar or is identical in design, manufacturing process, and quality control to another article previously verified as equivalent or as meeting more stringent criteria.

4.2.1.3 DEMONSTRATION (D)

Demonstration is a qualitative verification method in which the properties of the subject equipment are evaluated by observation. Demonstration is used with or without special test equipment or instrumentation, so as to verify the required characteristics of operational functioning, human engineering features, service and access features, transportability, and displayed data.

4.2.1.4 TEST (T)

Test is a verification method in which performance requirements are verified by measurement during or after the controlled application of functional and environmental stimuli. The measurements may require the use of laboratory equipment, recorded data, procedures, test support items, and services.

4.2.2 VERIFICATION PHASES

Verification of each Section 3 requirement shall be performed during one or more of the phases defined in sections 4.2.2.1 through 4.2.2.3.

With prior customer approval, verification may be performed in a different phase.

4.2.2.1 DEVELOPMENT VERIFICATION

This phase includes those verifications performed with minimum rigor and controls, so as to prove a design approach and to minimize technical risk

4.2.2.2 QUALIFICATION VERIFICATION

This phase is used to verify the design and performance requirements under specified environmental conditions.

4.2.2.3 ACCEPTANCE VERIFICATION

This phase consists of formal verifications performed to assure that the manufactured equipment meets contractual requirements.

4.3 DETAILED VERIFICATION REQUIREMENTS

Specific verification requirements will be included in this section, where specific test objectives, verification methods, or test data are required by Prime. For general HRDL verification methodologies, ISO/IEC 9314-3 Appendix A and ANSI X3.255-1996 are recommended as guidelines.

4.3.1 TRANSMITTER OPTICAL WAVEFORM VERIFICATION

Section 3.1.1 requirements shall be verified as specified in Table 4.3-1.

TABLE 4.3-1, HRDL TRANSMITTER SIGNAL VERIFICATION REQUIREMENTS

REQUIREMENT VERIFICATION CROSS REFERENCE MATRIX						
VERIFICATION METHOD: N=NOT APPLICABLE I=INSPECTION A=ANALYSIS D=DEMONSTRATION T=TEST	VERIFICATION METHOD APPLICABILITY: (I.E., WHEN CONDUCTED) A=ACCEPTANCE Q=QUALIFICATION			EQUIPMENT LEVEL OF APPLICABILITY: C=COMPONENT O=ORU		
TRANSMITTED SIGNAL	**EQUIP LEVEL**	**VERIFICATION METHOD**				
REQUIREMENT	**C or O**	**NA**	**I**	**A**	**D**	**T**
Nominal Transmitter Pulse Duration	O					A & Q
Signaling Rate	O					A & Q
Optical Center Wavelength (Note-1)	C or O			A & Q		
Optical Spectral Width (FWHM) (note-1)	C or O			A & Q		
Transmitted Signal Extinction Ratio	O					A & Q
Transmitter Waveform Rise Time	O					A & Q
Transmitter Waveform Fall Time	O					A & Q
Transmitter Total Jitter (Note-2)	O					A & Q
(Note-1) – These requirements may be verified at either the ORU or component level. (Note-2) – For NASDA ORUs, Transmitter Total Jitter testing will be performed on the PDH and HRMS engineering models using both the Bit Error Rate Test method and the Oscilloscope method. Total Jitter testing will be performed on the PDH, HRMS, and ICS Flight units using only the Oscilloscope method.						

4.3.1.1 TRANSMITTER JITTER VERIFICATION

Transmitted signal jitter requirements shall be verified using a Bit Error Rate Test method.

4.3.2 RECEIVER OPTICAL WAVEFORM VERIFICATION

Section 3.1.2 requirements shall be verified as specified in Table 4.3-2.

TABLE 4.3-2, HRDL RECEIVER SIGNAL VERIFICATION REQUIREMENTS

REQUIREMENT VERIFICATION CROSS REFERENCE MATRIX						
VERIFICATION METHOD NA=NOT APPLICABLE I=INSPECTION A=ANALYSIS D=DEMONSTRATION T=TEST	VERIFICATION METHOD APPLICABILITY: (I.E., WHEN CONDUCTED) A=ACCEPTANCE Q=QUALIFICATION			EQUIPMENT LEVEL OF APPLICABILITY: C=COMPONENT O=ORU		
RECEIVED SIGNAL	**EQUIP LEVEL**	**VERIFICATION METHOD**				
REQUIREMENT	**C or O**	**NA**	**I**	**A**	**D**	**T**
Nominal Received Pulse Duration	C			A & Q		
Signaling Rate	O					A & Q
Optical Center Wavelength (Note-1)	C or O			A & Q		
Optical Spectral Width (FWHM) (Note-1)	C or O			A & Q		
Received Signal Extinction Ratio	O			A & Q		
Received Waveform Rise Time	O					A & Q
Received Waveform Fall Time	O					A & Q
Received Signal Total Jitter	O					A & Q
Receiver Bit Error Rate (BER)	O					A & Q
(Note-1) – These requirements may be verified at either the ORU or component level						

4.3.2.1 RECEIVER BIT ERROR RATE VERIFICATION

Receiver Bit Error Rate (BER) shall be verified by sending a minimum of 100 seconds of data at maximum data rate at the minimum receiver input power, and confirming that the total number of errors between the input and received data streams meets the BER requirement.

4.3.3 ORU PROTOCOL, DATA RATE AND DATA PARSING

Orbital Replacement Unit (ORU) protocol shall be verified using operational scenarios typical for that ORU. If an ORU is capable of operating in several modes, then each mode of that ORU shall be verified via an operational scenario appropriate for that mode. These scenarios shall be submitted to Prime for review and approval.

The ability of an ORU to transmit and receive data at various rates up to, and including, its maximum data rate shall be verified in multiples of 0.5 Mbps throughout its data rate range and by whole numbers (i.e., 1,2,3, …) of its minimum data rate multiple.

ORUs utilizing data parsing as a means of flow control shall be tested to confirm this requirement.

4.4 VERIFICATION DOCUMENTATION

The verification process shall be documented.

Prior to use, all plans and procedures shall require customer approval.

4.5 CERTIFICATION REQUIREMENTS

Prior to delivery, all hardware and software verified against this specification shall be certified as defined in the System Verification Plan.

Certification is a verification subset that formally verifies that the design and manufacturing processes will produce equipment that meet the specified requirements in the specified operational environments. Any configuration changes after certification will require recertification of impacted requirements.

APPENDIX A

ACRONYMS AND ABBREVIATIONS

APPENDIX A - ACRONYMS AND ABBREVIATIONS

AIT	Analyses and Integration Team
APS	Automated Payload Switch
BER	Bit Error Rate
BPDU	Bitstream Protocol Data Unit
CADU	Channel Access Data Unit
CCSDS	Consultative Committee for Space Data Systems
COR	Communications Outage Recorder
dB	Decibels
dBm	Decibels (1 milliwatt reference)
DC	Direct Current
ED	End Delimiter
ESA	European Space Agency
FDDI	Fibre Distributed Data Interface
FWHM	Full Width Half Maximum
HCOR	High Rate Communications Outage Recorder
HRDL	High Rate Data Link
HRFM	High Rate Frame Multiplexer
ICD	Interface Control Document
ID	Identifier
IP	International Partner
IPT	Integrated Product Team
ISPR	International Standard Payload Rack
ISS	International Space Station
ISSP	International Space Station Program
JEM	Japanese Experimental Module
JMP	Joint Management Plan
LSB	Least Significant Bit
Max	Maximum
Mbps	Megabits per second
MBaud	Megabaud
MDM	Multiplexer-Demultiplexer Module
min	minimum
MPDU	Multiplexed Protocol Data Unit
ms	Millisecond
MSB	Most Significant Bit
NASDA	National Space and Development Agency of Japan
NASA	National Aeronautics and Space Administration
nm	Nanometer
NRZI	Non Return to Zero Invert on Ones
ns	Nanosecond
ORU	Orbital Replaceable Unit
PEHG	Payload Ethernet Hub Gateway
PG	Product Group

PLL	Phase Locked Loop
Rx	Receiver
SD	START Delimiter
sec	seconds
SSCB	Space Station Control Board
TAXI	Transparent Asynchronous Transmitter-Receiver Interface
Tx	Transmitter
us	Microsecond
USL	United States Laboratory
USOS	United States On-Orbit Segment

APPENDIX B

GLOSSARY OF TERMS

APPENDIX B - GLOSSARY OF TERMS

4B/5B ENCODING

On the HRDL link, five (5) signaling bits are used to represent four (4) data bits (i.e., 4B/5B). Consequently, using 4B/5B encoding, it takes 125 MBaud to encode 100 Mbps of data.

ALLOCATED DATA RATE (BAUD)

See NEGOTIATED DATA RATE.

A HRDL signaling bit. For the HRDL, five (5) signaling bits are used to represent four (4) data bits (i.e., 4B/5B). Consequently, using 4B/5B encoding, it takes 125 MBaud to encode 100 Mbps of data.

DATA FRAME

User definable data block within bitstream protocol or CCSDS packet protocol.

DATA RATE

The rate that data is actually being sent across the HRDL. The maximum data rate is 80% of the constant 125 MBaud Signaling Rate. Data rates lower than the maximum data rate do not necessitate a change in the 125 MBaud Signaling rate due to the insertion of SYNC symbols on the link.

DC-BALANCED DATA

A data stream where 50% of the signal is high power (“ones”) and 50% of the signal is low power (“zeroes”) on the physical bit stream. The Halt symbol and the SYNC symbol are examples of DC-balanced data streams.

ELEMENT

Refers to the module or truss segment for which a Product Group (PG) or IP has final integration responsibility. Consequently, they are also referred to as “End-Items”.

INTER-FRAME GAP

The mandatory gap, which must be inserted between any two data frames (bitstream protocol) or the END and START Delimiters of adjacent data frames (packet mode).

NEGOTIATED DATA RATE

The maximum HRDL data rate that has been agreed to by the parties responsible for the transmitting and receiving HRDL stations. This data rate is determined prior to the initialization of HRDL communications.

PACKET

A contiguous string of HRDL bits whose maximum length may not exceed 32768 bits (i.e., 4096 bytes).

RECEIVE STATION

The receive station is the destination of the HRDL data transmission, where the data is ultimately retrieved from the HRDL network. By this definition, the APS is not a receive station. The HRFM is a special type of receive station, that does not have to comply with the requirements of the receive station.

SIGNALING RATE

The number of Baud (i.e., signaling bits) which are transmitted per second. The HRDL Signaling Rate is a fixed 125 MBaud.

STATION

Stations are all entities that transmit and/or receive data across the HRDL. By this definition, the APS, HCOR, and HRFM are all stations.

TRANSMIT STATION

The transmit station is the source of the HRDL data transmission, where the data is initially placed onto the HRDL network. By this definition, the APS is not a transmit station.

APPENDIX C

OPTICAL POWER ALLOCATION METHODOLOGY

APPENDIX C - OPTICAL POWER ALLOCATION METHODOLOGY

CONTENTS

PARAGRAPH	PAGE
C1.0 INTRODUCTION	**3**
C2.0 HRDL LINK OPTICAL POWER ALLOCATION METHODOLOGY	**6**
C3.0 APS-TO-IP ISPR LINK OPTICAL POWER ALLOCATION	**8**
C4.0 APS-TO-TRUSS PAYLOAD LINK OPTICAL POWER ALLOCATION	**11**

TABLES

Table C-1, Optical Power Loss Allocation Summary	5
Table C-2, APS through IP P/L Harness/Connector Allocations	9
Table C-3, USL through IP P/L, Element Power Loss Allocations	9
Table C-4, APS to/from IP P/L HRDL Segment Losses	10
Table C-5, APS to/from IP ISPR Requirements (ICDs)	10
Table C-6, APS through Truss P/L Connector/Harness Allocations	12
Table C-7, USL through Truss P/L, Element Power Loss Allocations	12
Table C-8, Connector, Attenuation, & Bending Losses per Element	13
Table C-9, APS to/from Truss P/L HRDL Segment Losses	13
Table C-10, APS to/from Truss P/L Requirements (ICDs)	13

FIGURES

Figure C-1, High Rate Data Link Architecture Overview	4
Figure C-2, APS-to-IP ISPR High Rate Data Link	8
Figure C-3, APS-to-Truss Payload High Rate Data Link	11

C1.0 INTRODUCTION

Appendix C describes the allocation methodology used for developing the HRDL optical power amplitudes at the element and payload interfaces. There are many different methods that could have been chosen to develop the optical power allocations. The selected method provides an equitable distribution of all available optical power losses among the HRDL element developers through statistical analysis of the HRDL architecture.

The HRDL architecture used to develop the optical power allocations is the baseline architecture; no modifications to the number of production breaks or the transmitter/receiver optical power requirements were included in the allocation. The interface optical power amplitude requirements derived herein will be documented in the International Partner, element, and payload ICDs.

The Automated Payload Switch (APS) is the hub for all HRDL communications. All HRDL links transmit data to and/or receive data from the APS. Therefore, the optical power amplitudes are based on the APS. Figure C-1 provides an overview of the HRDL architecture.

The longest HRDL links, with the largest number of connectors, are the external truss payload links and the APM/JEM/CAM ISPR links. The other APM/JEM/CAM HRDL links have the same number or fewer connectors than the combined number of connectors of the ISPR and the interfacing module. The USL internal links, including the USL ISPR links, do not have a concern with total optical power loss, due to the limited number of connectors in these links.

Note

Appendix C documents the baseline architecture used to allocate optical power loss between the various elements. It is not intended to reflect the as-built design.

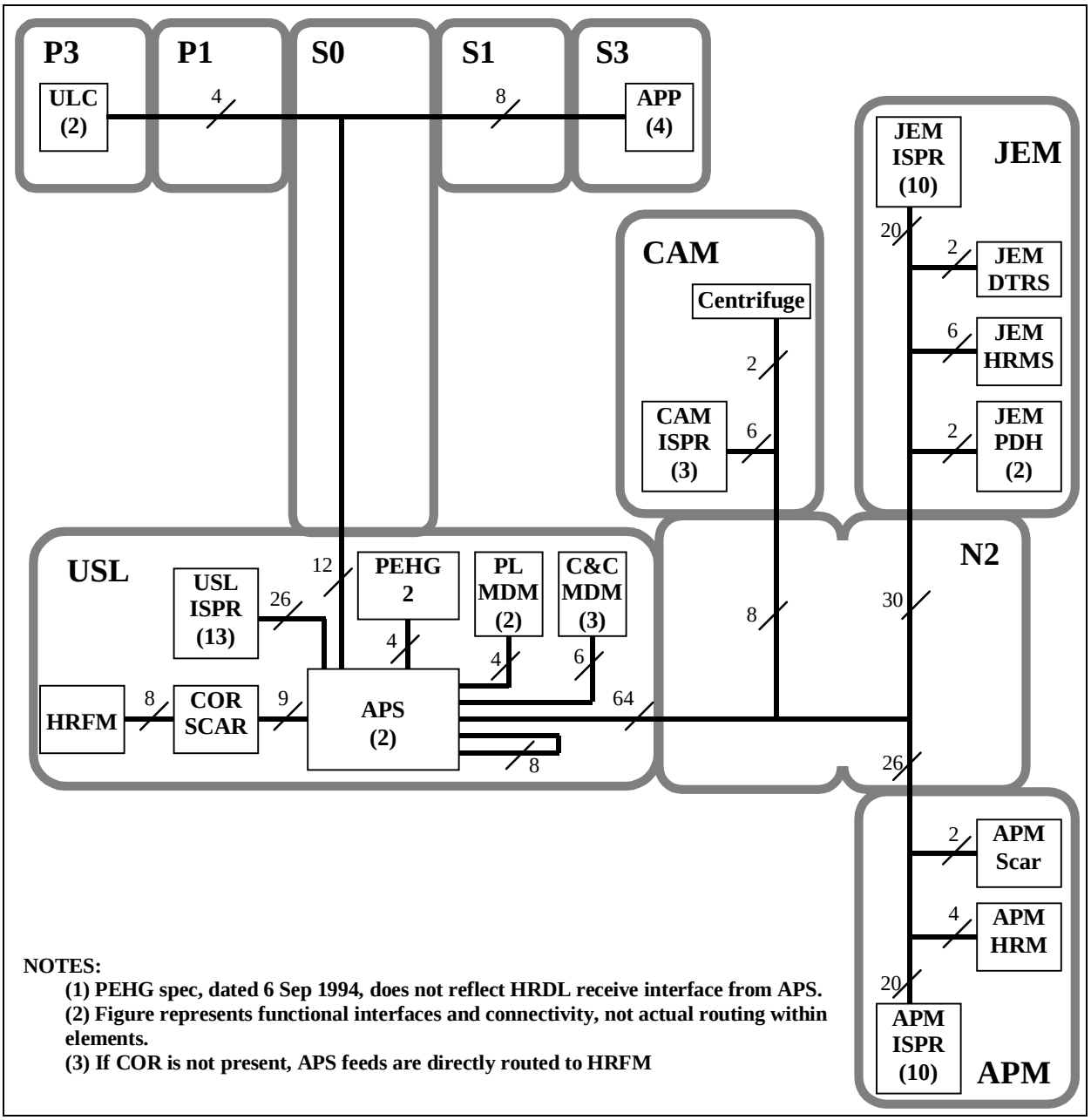

FIGURE C-1, HIGH RATE DATA LINK ARCHITECTURE OVERVIEW

For the optical power allocations, the following transmitter and receiver average optical power levels were used:

Transmitter:	Minimum = -12.0 dBm	Maximum = -6.0 dBm
Receiver:	Minimum = -34.2 dBm	Maximum = -9.0 dBm

The total loss that can be allocated across the elements and payloads is the difference between the minimum transmitter output power and the minimum receiver sensitivity. The total optical power loss available for allocation is 22.2 dB.

The total allocable loss has several components. The Prime contractor has retained a 3.0 dB safety reserve that will not be allocated to the elements or payloads. Transmitter aging effects are estimated at 1.0 dB, which will also not be allocated. Mode conditioning is estimated at 1.0 dB, to be allocated to the first three connectors after the transmitter (note: in the ISS HRDL system, this allocation is to only a single element or payload). Cable attenuation is estimated at 0.4 dB, to be allocated equally based on the number of total harnesses (outside the ORUs) in the longest HRDL links. Cable bending is estimated at 0.5 dB, also to be allocated equally based on the number of total harnesses in the longest HRDL links. In summary:

TABLE C-1, OPTICAL POWER LOSS ALLOCATION SUMMARY

Optical Power Loss Type	Optical Power Loss Allocation	Allocation Method
Prime Safety Reserve	3.0 dB	Not Allocated
Transmitter Aging	1.0 dB	Not Allocated
Mode Conditioning	1.0 dB	0.5 dB allocated to first connector after Transmitter 0.3 dB allocated to second connector after Transmitter 0.2 dB allocated to third connector after Transmitter 0.0 dB allocated to Receiver
Cable Attenuation	0.4 dB	Allocated equally, based on number of harnesses in the link
Cable Bending	0.5 dB	Allocated equally, based on number of harnesses in the link

The 5.9 dB optical power allocation identified above is subtracted from the total allocable loss of 22.2 dB. The remaining 16.3 dB is the loss that can be allocated to the harness connectors.

The allocation of optical loss to the harness connectors is based on the connector losses as specified in SSQ 21635 and SSQ 21636.

C2.0 HRDL LINK OPTICAL POWER ALLOCATION METHODOLOGY

A method for optical power loss allocation was developed to equitably share the available connector loss across the elements and the payloads. The number of harnesses and connectors in each link was based on the most current HRDL architecture information for each element. Each link is comprised of three loss components:

3. HRDL harness, with half-connectors on each end,
4. Hermetic connector at bulkhead interfaces,
5. Half connector at ORU interfaces.

These components are combined to develop the overall loss of the harness, based on the architecture for the specific link.

The number of standard deviations (sigmas) for a HRDL link is the parameter that is calculated. The optical loss of a HRDL link is allocated at the element/payload level. To develop the element allocations,

The optical loss of a HRDL link is allocated at the element/payload level. To develop the element allocations, the components of each link are combined together at the element level. For each element, a total mean and standard deviation is calculated of the form U + S*X, where

U = the mean of the element-level optical loss
S = the standard deviation of the element-level optical loss
X = the number of standard deviations allocated for this link

The means and standard deviations are algebraically summed for all of the elements in a HRDL link, where the total must equal 16.3 dB. This equation is solved for the number of standard deviations (X) for this HRDL link. This value is used to determine the allocable loss for each element.

The rack and panel connector loss distribution was assumed to have the same distribution as the circular connectors. The connector loss values (mean and sigma) are as defined in SSP 21635, Table XII-A. For a half connector, 50% of the mean connector loss and 70.7% of the sigma connector loss is allocated. For a full harness with similar half-connectors on each end, the full connector loss distribution is used. For a full harness with dissimilar half-connectors on each end, the 50% mean connector losses are added together, and the 70.7% sigma connector losses are root-sum-squared together. Hermetic connectors are included as whole connectors, allocated to the appropriate element.

A similar approach is used at the element level for combining harnesses and connectors into a single element loss allocation. The means of the components are added together, and the standard deviations are root-sum-squared together.

After each of the individual element optical loss allocations is calculated, the individual element means and sigmas are algebraically summed. The resulting equation, which is set equal to the total connector loss (16.3 dB), is solved for the number of standard deviations associated with this link. This value is used to calculate the allocated connector loss for each element.

Cable bending (0.5 dB) and cable attenuation (0.4 dB) is allocated evenly across the total number of harnesses in the HRDL link. The element(s) with a transmitter gets 1.0 dB each for mode conditioning. These allocations are added to the connector loss per element to obtain the total optical insertion loss per element.

The optical insertion losses are used to develop the optical power levels at the element and payload interfaces. The minimum transmitter output power of -12.0 dBm is the initial value. Element segment insertion losses are cumulatively added to obtain the interface power level. The extra 4.0 dB reserved at Prime (3.0 dB for safety reserve, 1.0 dB for transmitter aging) will be incorporated as a step function between the USL and the adjacent modules (S0 and Node2). For example, if the USL transmits a minimum optical signal of -16.0 dBm at the Node2 interface, then the Node2 requirement would be to receive a minimum signal of -20.0 dBm from the USL. This method of accounting for Prime reserve does not affect the link margins or testing, since there is no Prime margin allocated inside an element.

C3.0 APS-TO-IP ISPR LINK OPTICAL POWER ALLOCATION

An overview of the APS-to-IP ISPR HRDL link is provided in Figure C-2.

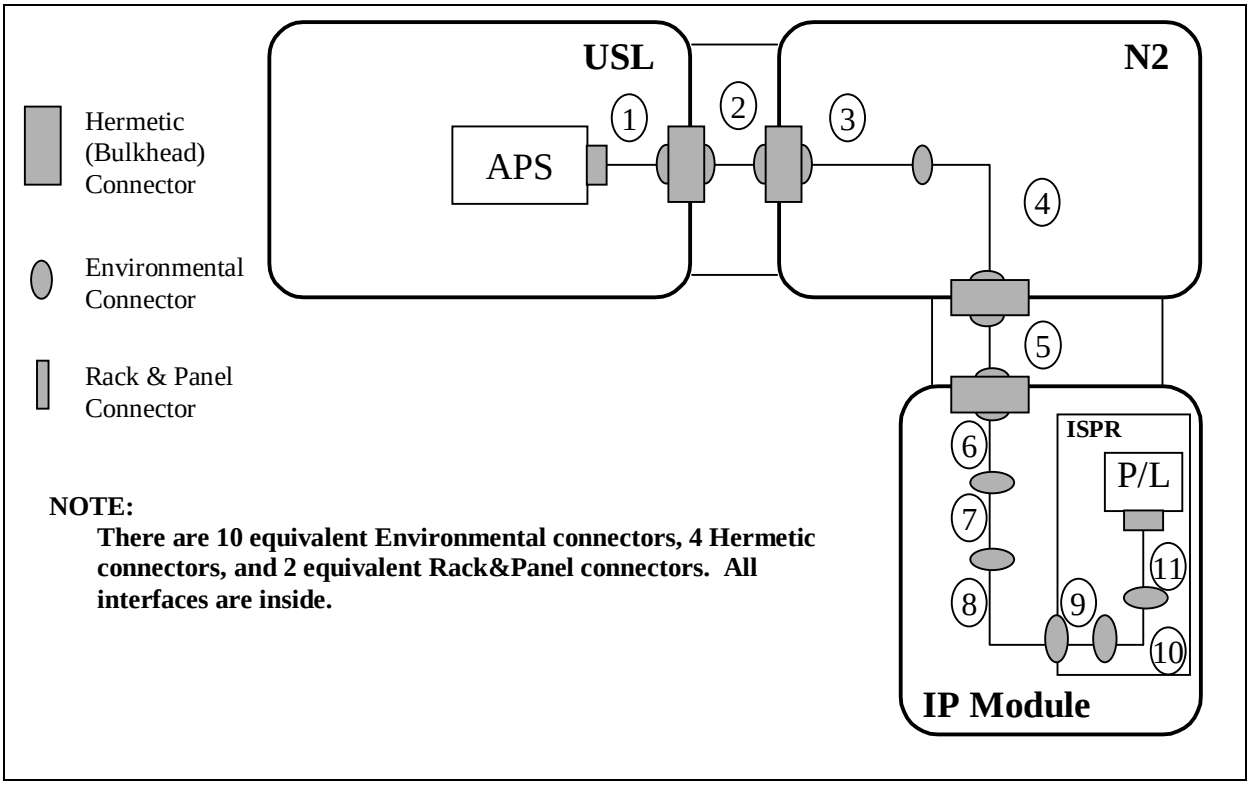

FIGURE C-2, APS-TO-IP ISPR HIGH RATE DATA LINK

The IP ISPR link has a total of 11 harnesses between the APS and the payload ORU. Node 2 is allocated one internal production break, the IP module is allocated two internal production breaks, and the payload is allocated two internal production breaks (includes ARIS-ISPR break). The Node 2-USL and Node 2-IP module vestibule jumpers are allocated to Node 2. Both halves of the APS and payload ORU connectors are included in the optical loss allocation calculations. All harnesses are internal (i.e., not exposed to the external environment), implying an unstressed environment for the connectors.

Using the optical power allocation methodology as described in section C2.0 and the HRDL architecture as shown in Figure C-2, the following allocations are developed for the IP ISPR link:

TABLE C-2, APS THROUGH IP P/L HARNESS/CONNECTOR ALLOCATIONS

Harness/Connector	Optical Loss Allocated to:	Optical Loss Mean (dB)	Optical Loss Sigma (dB)
APS Half Connector	USL	0.415	0.233
USL Internal Harness	USL	0.83	0.33
USL Forward Bulkhead Connector	USL	0.97	0.29
USL-Node2 Vestibule Harness	Node2	0.83	0.33
Node2 Aft Bulkhead Connector	Node2	0.97	0.29
Node2 Internal Harness #1	Node2	0.83	0.33
Node2 Internal Harness #2	Node2	0.83	0.33
Node2-IP Bulkhead Connector	Node2	0.97	0.29
Node2-IP Module Vestibule Harness	Node2	0.83	0.33
IP Bulkhead Connector	IP	0.97	0.29
IP Internal Harness #1	IP	0.83	0.33
IP Internal Harness #2	IP	0.83	0.33
IP Internal Harness #3	IP	0.83	0.33
PL Harness #1	PL	0.83	0.33
PL Harness #2	PL	0.83	0.33
PL Harness #3	PL	0.83	0.33
PL ORU Connector	PL	0.415	0.233

The element level power loss allocations, derived from the above connector and harness values and using the methodology of the previous section, are summarized below:

TABLE C-3, USL THROUGH IP P/L, ELEMENT POWER LOSS ALLOCATIONS

Element	Number of Harnesses in this link	Optical Loss Mean-Element (dB)	Optical Loss Sigma-Element (dB)	Optical Loss Equation
USL	1	2.215	0.497	2.215 + 0.497X
Node2	4	5.26	0.777	5.26 + 0.777X
IP	3	3.46	0.641	3.46 + 0.641X
P/L	3	2.905	0.617	2.905 + 0.617X

Algebraically summing the means and sigmas, the total link loss is defined as:

$$13.84 + 2.532X = 16.3$$

Where 16.3 is the total connector loss to be allocated for a HRDL link. Solving for X, the number of standard deviations for this link is X=0.972. This number infers that each element/payload has the same probability (83.4%) of meeting its individual optical loss allocation.

The calculated number of standard deviations is inserted into the element loss equations to determine the allocated connector loss per element segment.

TABLE C-4, APS TO/FROM IP P/L HRDL SEGMENT LOSSES

Element	Connector Loss	Attenuation, Bending Loss	Total Element Insertion Loss
USL	+ 0.497*(0.972) = 2.698	1*(0.5+0.4)/11 = 0.082	2.78 dB
Node2	+ 0.777*(0.972) = 6.015	4*(0.5+0.4)/11 = 0.327	6.34 dB
IP	3.46 + 0.641*(0.972) = 4.083	3*(0.5+0.4)/11 = 0.245	4.33 dB
P/L	2.905 + 0.617*(0.972) = 3.505	3*(0.5+0.4)/11 = 0.245	3.75 dB

The optical signal interface values that will be included in the appropriate ICDs are as follows:

TABLE C-5, APS TO/FROM IP ISPR REQUIREMENTS (ICDS)

Link Direction	Interface	Transmitting Element	Minimum Transmit Requirement (dBm)	Receiving Element	Minimum Receive Requirement (dBm)
APS-IP ISPR	USL-Node2	USL	-15.78	Node2	-19.78
APS-IP ISPR	Node2-IP	Node2	-26.12	IP	-26.12
APS-IP ISPR	Module-ISPR	Module	-30.45	ISPR	-30.45
IP ISPR-APS	ISPR-Module	ISPR	-16.75	Module	-16.75
IP ISPR-APS	IP-Node2	IP	-21.08	Node2	-21.08
IP ISPR-APS	Node2-USL	Node 2	-27.42	USL	-31.42

These interface requirements will be used for all IP module-to-APS HRDL links.

C4.0 APS-TO-TRUSS PAYLOAD LINK OPTICAL POWER ALLOCATION

An overview of the APS-to-Truss Payload HRDL link is provided in Figure C-3.

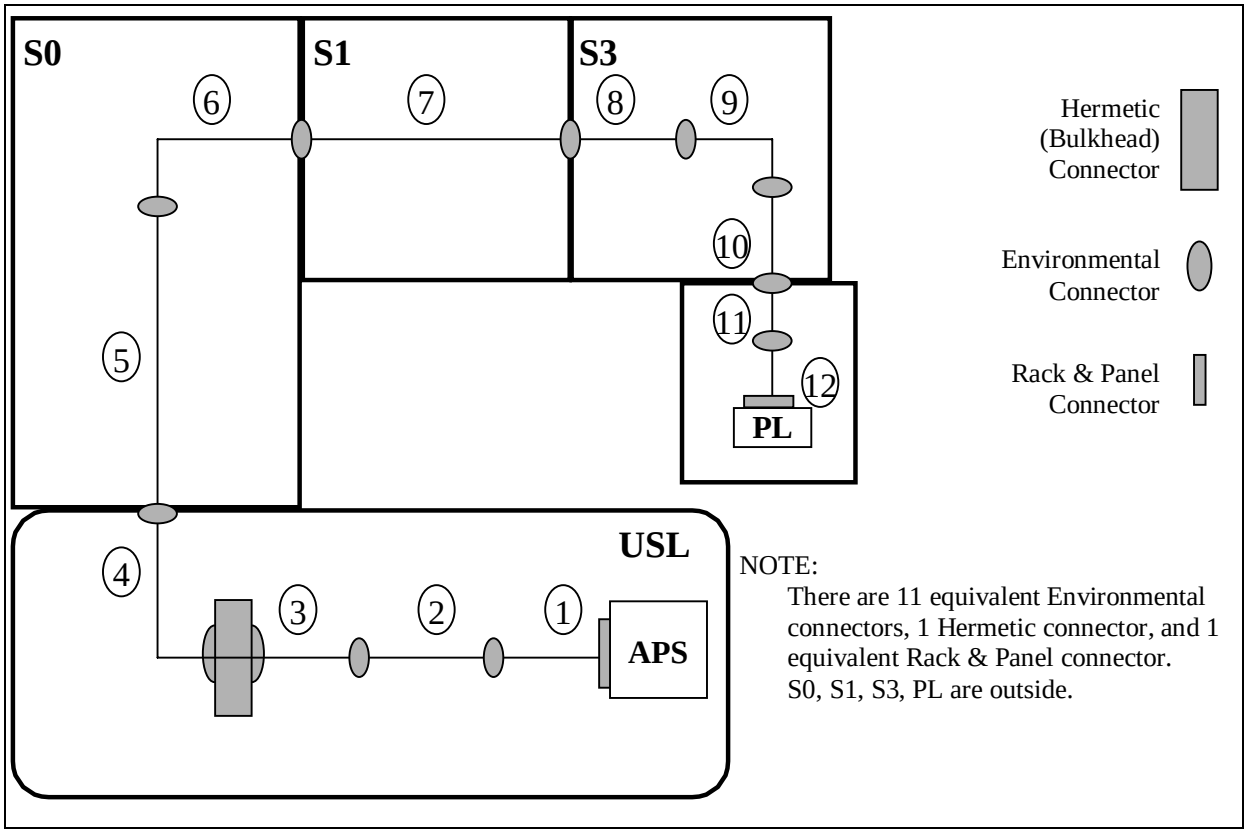

FIGURE C-3, APS-TO-TRUSS PAYLOAD HIGH RATE DATA LINK

The Truss payload link has a total of 12 harnesses between the APS and the payload ORU. USL is allocated two internal production breaks, S0 is allocated one internal production break, S3/P3 is allocated three internal production breaks, and the payload is allocated one internal production break. Both halves of the APS and payload ORU connectors are included in the optical loss allocation calculations. All USL harnesses are internal, with the exception of the external harness connector that interfaces with S0. All other harnesses are external, implying a stressed environment for the connectors.

Using the optical power allocation methodology as described in section C2.0 and the HRDL architecture as shown in Figure C-3, the following allocations are developed for the IP ISPR link:

TABLE C-6, APS THROUGH TRUSS P/L CONNECTOR/HARNESS ALLOCATIONS

Harness/Connector	Optical Loss Allocated to:	Optical Loss Mean-Actual (dB)	Optical Loss Sigma-Actual (dB)	Optical Loss Mean-Unstressed (dB)	Optical Loss Sigma-Unstressed (dB)
APS Half Connector	USL	0.415	0.233	0.415	0.233
USL Internal Harness #1	USL	0.83	0.33	0.83	0.33
USL Internal Harness #2	USL	0.83	0.33	0.83	0.33
USL Internal Harness #3	USL	0.83	0.33	0.83	0.33
USL Aft Gore Panel Connector	USL	0.97	0.29	0.97	0.29
USL External Harness #1	USL	0.970	0.345	0.83	0.33
S0 External Harness #1	S0	1.11	0.36	0.83	0.33
S0 External Harness #2	S0	1.11	0.36	0.83	0.33
S1/P1 External Harness	S1/P1	1.11	0.36	0.83	0.33
S3/P3 Internal Harness #1	S3/P3	1.11	0.36	0.83	0.33
S3/P3 Internal Harness #2	S3/P3	1.11	0.36	0.83	0.33
S3/P3 Internal Harness #3	S3/P3	1.11	0.36	0.83	0.33
Truss P/L Harness #1	PL	1.11	0.36	0.83	0.33
Truss P/L Harness #2	PL	1.11	0.36	0.83	0.33
Truss P/L ORU Connector	PL	0.555	0.255	0.415	0.233

The element level power loss allocations, derived from the above actual environment connector and harness values and using the methodology of the previous section, are summarized below:

TABLE C-7, USL THROUGH TRUSS P/L, ELEMENT POWER LOSS ALLOCATIONS

Element	Number of Harnesses in this link	Optical Loss Mean-Element (dB)	Optical Loss Sigma-Element (dB)	Optical Loss Equation
USL	4	4.845	0.764	4.845 + 0.764X
S0	2	2.22	0.509	2.22 + 0.509X
S1/P1	1	1.11	0.36	1.11 + 0.36X
S3/P3	3	3.33	0.624	3.33 + 0.624X
Truss P/L	2	2.775	0.569	2.775 + 0.569X

Algebraically summing the means and sigmas, the total link loss is defined as:

$$14.28 + 2.826X = 16.3$$

Where 16.3 is the total connector loss to be allocated for a HRDL link. Solving for X, the number of standard deviations for this link is X=0.715. This number infers that each element/payload has the same probability (76.4%) of meeting its individual optical loss allocation.

The calculated number of standard deviations is inserted into the element loss equations to determine the allocated connector loss per element.

TABLE C-8, CONNECTOR, ATTENUATION, & BENDING LOSSES PER ELEMENT

Element	Actual Connector Loss	Attenuation, Bending Loss	Total Element Insertion Loss
USL	4.845 + 0.764*(0.715) = 5.391	4*(0.5+0.4)/12 = 0.300	5.69 dB
S0	2.22 + 0.509*(0.715) = 2.584	2*(0.5+0.4)/12 = 0.150	2.73 dB
S1/P1	1.11 + 0.36*(0.715) = 1.367	1*(0.5+0.4)/12 = 0.075	1.44 dB
S3/P3	3.33 + 0.624*(0.715) = 3.776	3*(0.5+0.4)/12 = 0.225	4.00 dB
Truss P/L	2.775 + 0.569*(0.715) = 3.182	2*(0.5+0.4)/12 = 0.150	3.33 dB

These values are the allocated loss for a link segment, based on whether each harness is internal (unstressed) or external (stressed). If the element is tested in an unstressed environment, the HRDL segment should be tested to an unstressed insertion loss. The following values should be used for HRDL segment insertion loss values in an unstressed environment:

TABLE C-9, APS TO/FROM TRUSS P/L HRDL SEGMENT LOSSES

Element	Unstressed Connector Loss	Attenuation, Bending Loss	Total Unstressed Element Insertion Loss
USL	4.705 + 0.758*(0.715) = 5.247	4*(0.5+0.4)/12 = 0.300	5.55 dB
S0	1.66 + 0.467*(0.715) = 1.994	2*(0.5+0.4)/12 = 0.150	2.14 dB
S1/P1	0.83 + 0.33*(0.715) = 1.066	1*(0.5+0.4)/12 = 0.075	1.14 dB
S3/P3	2.49 + 0.572*(0.715) = 2.899	3*(0.5+0.4)/12 = 0.225	3.12 dB
Truss P/L	2.075 + 0.522*(0.715) = 2.448	2*(0.5+0.4)/12 = 0.150	2.60 dB

The optical signal interface values that will be included in the appropriate ICDs are as follows:

TABLE C-10, APS TO/FROM TRUSS P/L REQUIREMENTS (ICDS)

Link Direction	Interface	Transmit Element	Minimum Transmit Reqmt Stressed (dBm)	Minimum Transmit Reqmt-Unstressed (dBm)	Receiving Element	Minimum Receive Reqmt Stressed (dBm)	Minimum Receive Reqmt-Unstressed (dBm)
APS-Truss P/L	USL-S0	USL	-18.69	-18.55	S0	-22.69	-25.20
APS-Truss P/L	S0-S1/P1	S0	-25.42	-27.34	S1/P1	-25.42	-27.34
APS-Truss P/L	S1-S3, P1-P3	S1/P1	-26.86	-28.48	S3/P3	-26.86	-28.48
APS-Truss P/L	S3/P3-Truss P/L	S3/P3	-30.86	-31.60	Truss P/L	-30.86	-31.60
Truss P/L-APS	Truss P/L-S3/P3	Truss P/L	-16.33	-15.60	S3/P3	-16.33	-15.60
Truss P/L-APS	S3-S1, P3-P1	S3/P3	-20.33	-18.72	S1/P1	-20.33	-18.72
Truss P/L-APS	S1/P1-S0	S1/P1	-21.77	-19.86	S0	-21.77	-19.86
Truss P/L-APS	S0-USL	S0	-24.50	-22.00	USL	-28.50	-28.65