Direction des Systèmes Orbitaux
Sous-Direction des Radiocommunications
Division "Navigation et Localisation "
Département "Argos-Sarsat"

Argos-3/Sarsat-3

Réf. secrétariat : DSO/RC/NL/AS n° 03-95

Sarsat-3 New Generation Beacon
General Specification

	Nom et Sigle	Date et Signature
Préparé par	Michel SARTHOU - CNES	
Accepté par	Claude GAL - CNES	27/08/2001
Approuvé par		
Application autorisée par		

DIFFUSION

Sigles/Sociétés	Noms	Nbre d'ex.	BPI	Observations
DIFFUSION INTERNE :				
DSO/RC/NL/AS	C. GAL A. BARUMCHERCYK J.P. BARRAILH G. PORTAS M. SARTHOU			
DTS/AE/TTL/TS	E. BOUISSON			
DIFFUSION EXTERNE :				

BORDEREAU D'INDEXATION

Classe confidentialité :	**Code consultation** :	
Mots-clé d'auteur : Sarsat-3, Beacon, Specification		
Objet / Titre : Sarsat-3 New Generation Beacon General Specification		
Auteur(s) : CNES		
Résumé :		
Commentaires d'auteur :		
Situation du document / Document(s) rattaché(s) :	**Dépositaire** :	
Nombre total de pages : **Dont pages liminaires** : **Dont annexes** :	**Volume** :	**Langue** :
Document géré en configuration :	**A dater du** :	**Responsable** :
Contrat :		
Logiciel(s) hôte + Réf. fichier(s) :		

REPERTOIRE DES MODIFICATIONS

Edition	Révision	Date	Pages modifiées	Causes d'évolution	Visas
Draft	1	11 August 2003	Creation		

Summary

LIST OF ACRONYMS **1**

REFERENCE DOCUMENTS **2**

1 INTRODUCTION **3**

2 SYSTEM REQUIREMENTS **4**

2.1 TRANSMITTED BIT STREAM GENERATION 4

2.1.1 Repetition period *4*

2.1.2 Total transmission time *4*

2.1.3 Carrier wave (CW) preamble *5*

2.1.4 Digital message *5*

2.1.4.1 Bit, channel and symbol rates 5

2.1.4.2 Convolutional coding 6

2.1.4.3 Scrambling 7

2.1.4.4 Message end 8

2.1.4.5 Synchronisation bit pattern 8

2.1.4.6 Short and Long Message Duration 9

2.2 MODULATOR AND 406 MHZ TRANSMITTER 9

2.2.1 Transmitted frequency and stability *9*

2.2.2 Data encoding *10*

2.2.3 Modulation *11*

2.2.3.1 Rise and fall times, data asymmetry 11

2.2.3.2 Phase and amplitude accuracy 12

2.2.3.3 Modulator description 12

2.2.4 Transmitter power output *13*

2.2.5 Antenna characteristics *13*

2.2.6 Spurious transmissions *13*

3 DIGITAL MESSAGE STRUCTURE **14**

LIST OF ACRONYMS

bps	bit per second
cbps	channel bit per second
CW	Carrier Wave (pure carrier)
FCS	Frame Checking Sequence
RHCP	Right Hand Circular Polarization
S/C	Spacecraft
sps	symbol per second
TBC	To be confirmed
TBD	To be defined
VSWR	Voltage Standing Wave Ratio

REFERENCE DOCUMENTS

RD1 Spécifications Techniques de Besoins de l'Instrument SARP-3
A3-ST-110-001/ED - Ed 0 Rev 2 - 14 Février 2000

RD2 Specification for Cospas/Sarsat 406 MHz Distress Beacons
C/S T.001. Issue 3 - Revision 4 - October 2002

RD3 Cospas/Sarsat 406 MHz Frequency Management Plan
C/S T.012. Issue 1 - October 2002

1 INTRODUCTION

The purpose of this document is to define the minimum requirements to be used for the development and manufacturing of Sarsat-3 new generation beacons.

The purpose is to assure that the Sarsat-3 new generation beacons manufactured according to these specifications will :

1. not interfere with the operation of other platforms,

2. be compatible with the LEOSAR on-board equipment : SARP-3 on METOP 1, 2, 3, NOAA-N'and NPOESS C1 (TBC).

3. provide location determination accuracy compatible with system specifications.

These specifications do not, in themselves, provide assurance that the applicable national and international radio regulations will be met. These regulations must additionally be complied with. (e.g ITU-R S 4 1162,1163 1164).

Specifications which are critical to the Sarsat system are defined in detail. Specifications which could be developed by users themselves are identified in more general terms.

2 SYSTEM REQUIREMENTS

2.1 TRANSMITTED BIT STREAM GENERATION

A transmitted bit stream generator will control the modulator and transmitter so that the digital user messages are transmitted in a form that can be processed by the satellite instrument. The general principle for a S3 transmission is defined by the figure below :

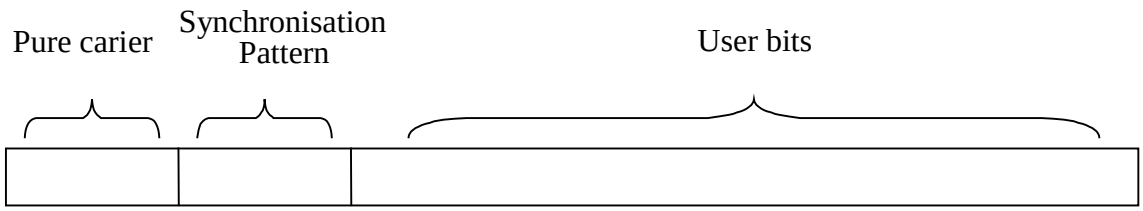

2.1.1 Repetition period

For all beacons, following C/S T.001 the messages transmission is periodical with a repetition period 50 sec +/- 2.5 sec

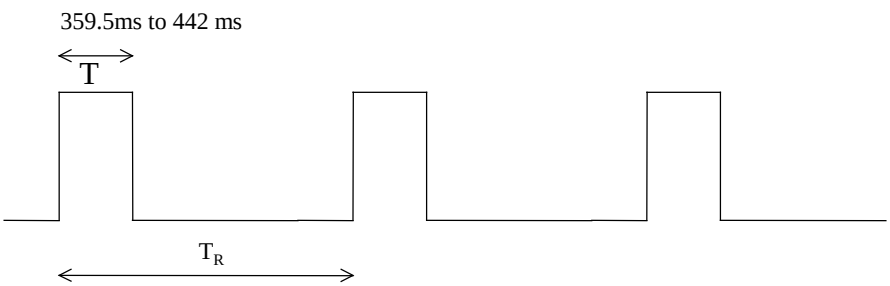

2.1.2 Total transmission time

The total transmission time T, measured at the 90% power points, shall be :

Short messages : 359.5 ms

Long messages : 442 ms

2.1.3 Carrier wave (CW) preamble

The initial 82 ms ± 2 ms of the transmitted signal shall consist of an unmodulated carrier at the transmitter frequency measured between the 90% power point and the beginning of the modulation.

The pure carrier wave must be centered according to the symbol states given in figure below :

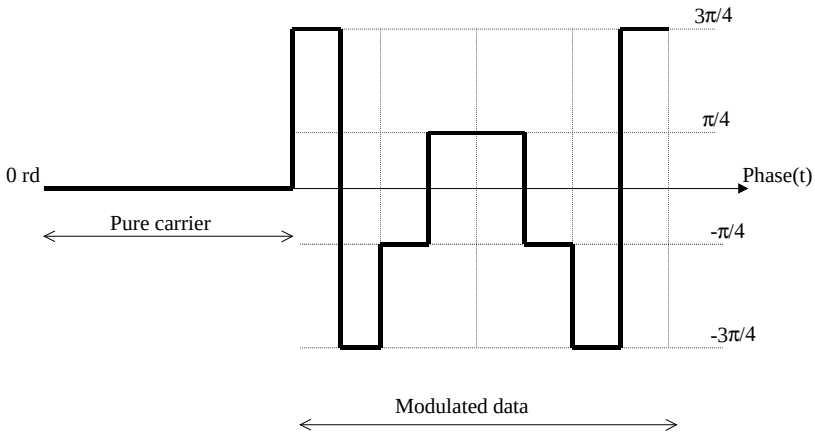

Pure carrier preamble

2.1.4 Digital message

2.1.4.1 Bit, channel and symbol rates

Bit rate of the user digital message shall be 400 bps before convolutional encoding. This corresponds to a channel bit rate after encoding of 800 cbps (7;1/2 convolutional encoding), which means that the symbol rate for the QPSK modulation is 400 sps +/-1sps (2 channel bits -> 1 symbol).

The bit rate stability for a message duration shall be such that $\frac{|\Delta Fb|}{Fb} \leq 2.5 \times 10^{-4}$

where Fb is the bit rate.

2.1.4.2 Convolutional coding

The encoding rule specified in the DVB recommandation permits the generation of a non-systematic code.

- § Nomenclature : Convolutional code
- § Code rate : 1/2
- § Constraint length : 7 bits
- § Connection vectors : G1 = 1111001 (171 in octal)
  G2 = 1011011 (133 in octal)
- § Phase relationship : G1 is associated with first symbol

The encoding rule specified in this standard permits the generation of a non-systematic code. This encoding rule is defined by the following equations :

$$s1(t) = d(t) + d(t-1) + d(t-2) + d(t-3) + d(t-6) \text{ modulo } 2$$

$$s2(t) = d(t) + d(t-2) + d(t-3) + d(t-5) + d(t-6) \text{ modulo } 2$$

where s1 is the first output **channel bit**, s2 the second output **channel bit** and d(t) is the input information at time t. The sign + represents the modulo 2 addition. A possible implementation of the encoder is shown in figure below.

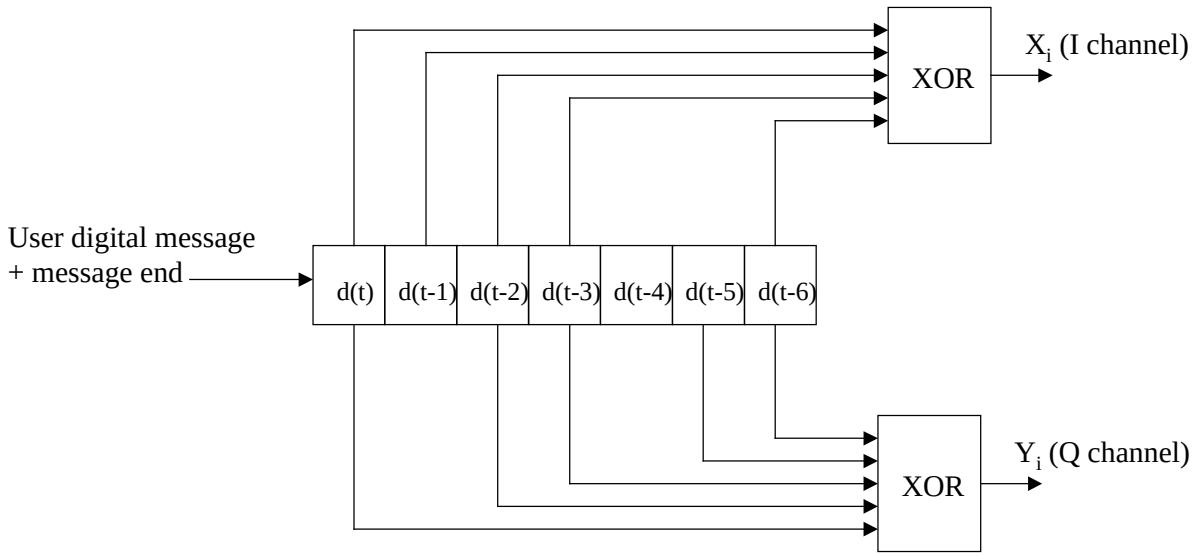

Convolutional encoder

Notes :

□ = single bit delay
XOR = modulo 2 adder

2.1.4.3 Scrambling

The previous channel bits are scrambled like the following scheme to provide inputs X' and Y' to the modulator:

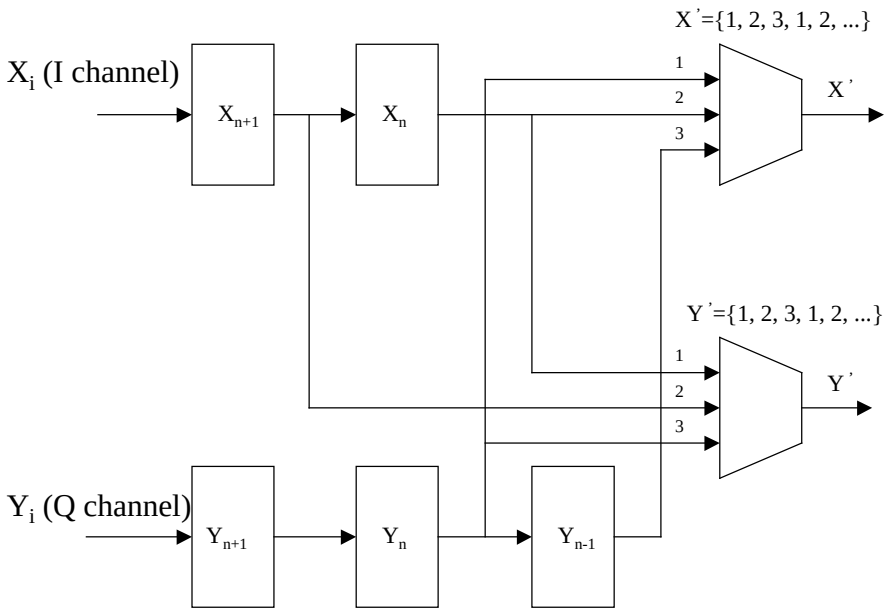

Scrambling

The bits which come from the (7,1/2) coder are as follows :

$$\mathbf{L}\left|\begin{matrix} X1 & X2 & X3 \\ Y1 & Y2 & Y3 \end{matrix}\right|\left|\begin{matrix} X4 & X5 & X6 \\ Y4 & Y5 & Y6 \end{matrix}\right|\mathbf{L}$$

The bits which come from the scrambler are as follows :

$$\mathbf{L}\left|\begin{matrix} Y1 & X2 & Y2 \\ X1 & X3 & Y3 \end{matrix}\right|\left|\begin{matrix} Y4 & X5 & Y5 \\ X4 & X6 & Y6 \end{matrix}\right|\mathbf{L}$$

2.1.4.4 Message end

A message end bit pattern of 7 or 8, all bits are “0”, shall be added to the user digital message in order to clear out the convolutional encoder. This number depends on the number of bit which makes up the user digital message. The following array gives this number :

	Number of bits for the user digital message (*)	**Number of “0” bit which must be added to the end of the message before coding**
Short Message	88	8
Long Message	120	9

(*) : the first bit (before convolutional coding) definesthe length of the message and equals 0 for a short message and 1 for a long message.

2.1.4.5 Synchronisation bit pattern

A 30 bits or 15 symbols synchronization pattern is added in front of the convolutional encoded bit stream at the channel bit rate (i.e 800 cbps) or symbol rate (i.e 400 sps) (note that these bits are not encoded) :

I channel symbols : 1111 1111 1111 111
Q channel symbols : 0011 0101 0100 111

The synchronization bit pattern is constituted by one bit from channel I, one bit from channel Q, one bit from channel I, ….., giving the following result :

MSB LSB
1010 1111 1011 1011 1011 1010 1111 11 --> 5373567277 in octal

2.1.4.6 Short and Long Message Duration

Short Message : the user part shall contain a 88-bit message at abit rate of 400 bps.

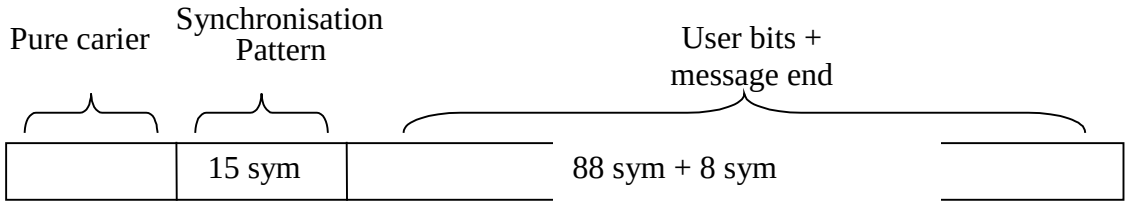

Duration = pure carrier + synchro pattern + user bits
= 82 ms + 37.5 ms + 240 ms = 82 ms + 277.5 ms
= 359.5 ms

Long Message : the user part shall contain a 120-bit message at abit rate of 400 bps.

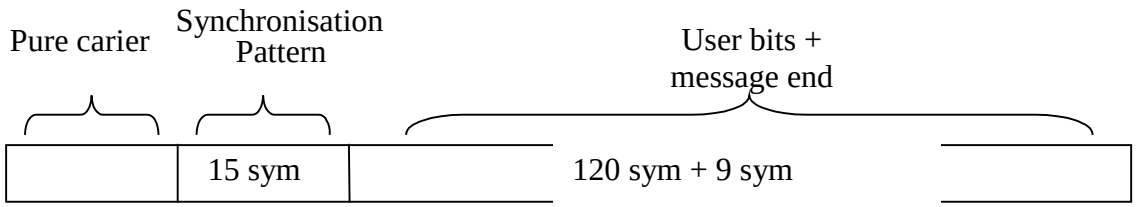

Duration = pure carrier + synchro pattern + user bits
= 82 ms + 37.5 ms + 322.5 ms = 82 ms + 360 ms
= 442 ms

2.2 MODULATOR AND 406 MHZ TRANSMITTER

2.2.1 Transmitted frequency and stability

The beacon transmitted frequency shall be in the 80 kHz frequency band 406.010 – 406.090 MHz. The transmission channel shall be assigned by Cospas/Sarsat according to the 406 MHz Frequency Management Plan (C/S T.012).

The transmitted frequency shall have the following characteristics :

§ Initial setting : $\pm$ 1 kHz around the channel frequency

§ Medium term stability : mean slope < $\pm 1.10^{-9}$ / minute
residual frequency variation < 3.10^{-9}

§ Short term stability : < 2.10^{-9} within 100 ms

The transmitted medium-term frequency stability shall be defined by the mean slope of the frequency versus time over 15-minute period and by the residual frequency variation about the mean slope. The mean slope and the residual frequency variation shall be measured as follows : data shall be obtained by making 18 sequential frequency measurements, one every repetition period over an approximate 15-minute interval. Each measurement shall be a 100ms frequency average performed during the modulated part of the message. The slope is defined as that of the least-squares straitght-line fit to the 18 data points. Residual frequency variation is defined as the rms (root mean square) error of the points relative to the least-squares estimate.

2.2.2 Data encoding

The I channel is shaped by a NRZ-L and the Q channel is shaped by a Manchester or Biphase-L. See hereafter an example of the data encoding :

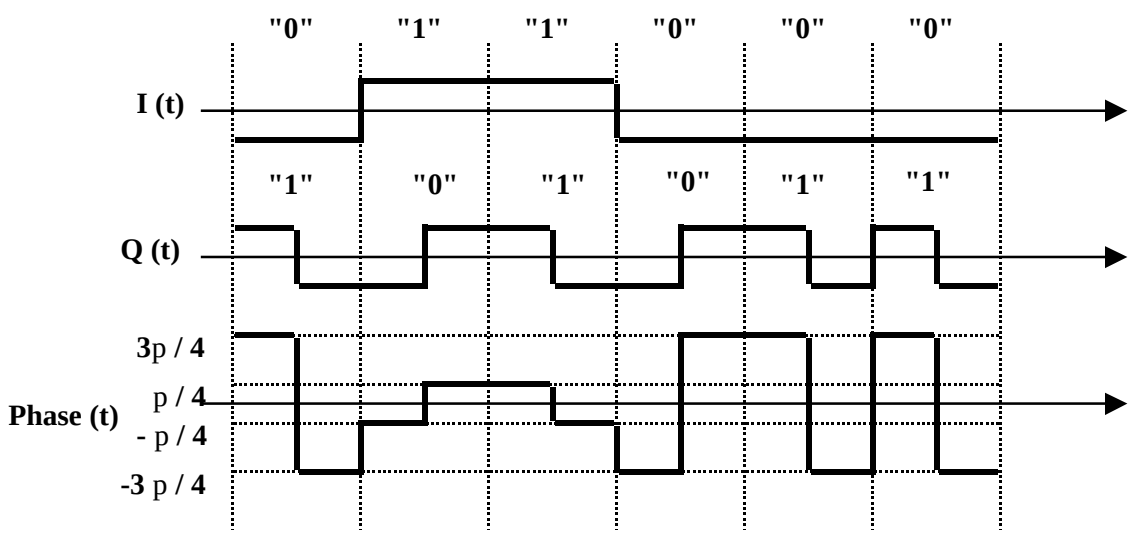

Data encoding

2.2.3 Modulation

2.2.3.1 Rise and fall times, data asymmetry

The rise t_m and fall t_d times of the modulated wave form, as shown in figure below, shall be lower than 10µs.

The data asymmetry, as shown on figure below, shall be such that $\frac{|t_1 - t_2|}{t_1 + t_2} \leq 1\%$.

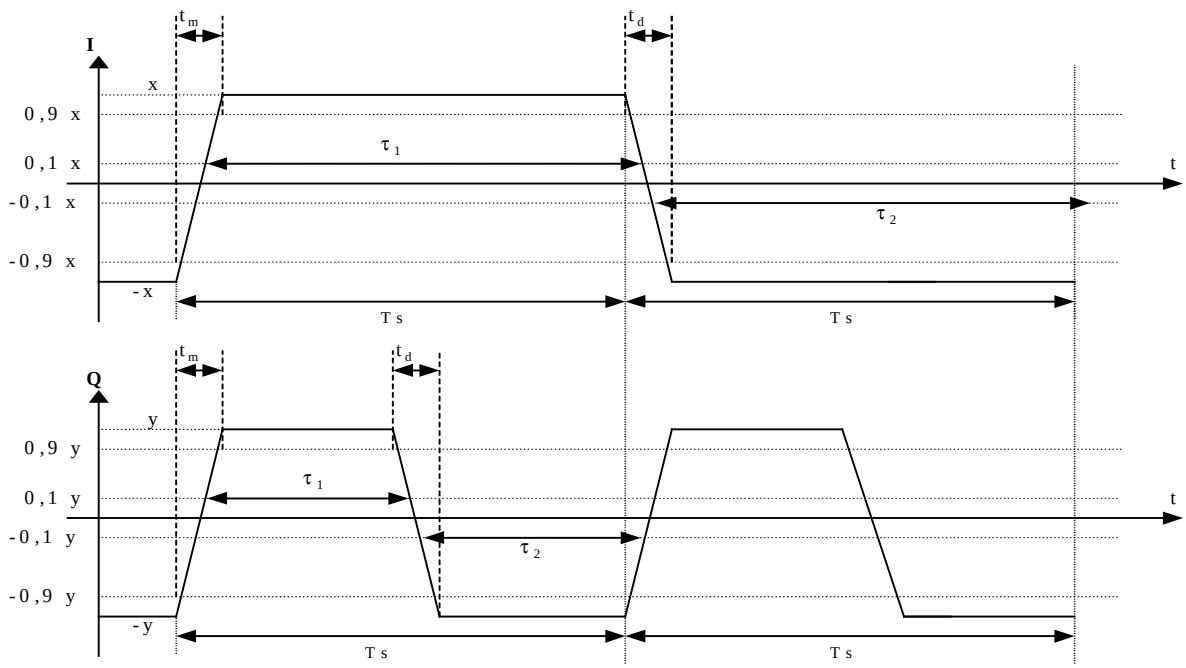

Definition of the rise and fall times, and modulation symmetry on each channel
(Ts is the symbol time)

2.2.3.2 Phase and amplitude accuracy

The state phase accuracy shall be in accordance with the figure below :

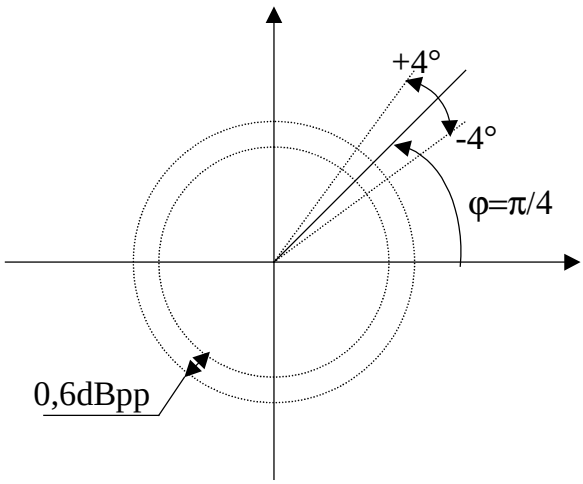

Phase and amplitude accuracy

That means a phase accuracy between +/- 4° around the perfect phase ($\frac{p}{4}, -\frac{p}{4}, \frac{3p}{4}$, and $-\frac{3p}{4}$) and an amplitude accuracy lower than 0,6 dBpp.

2.2.3.3 Modulator description

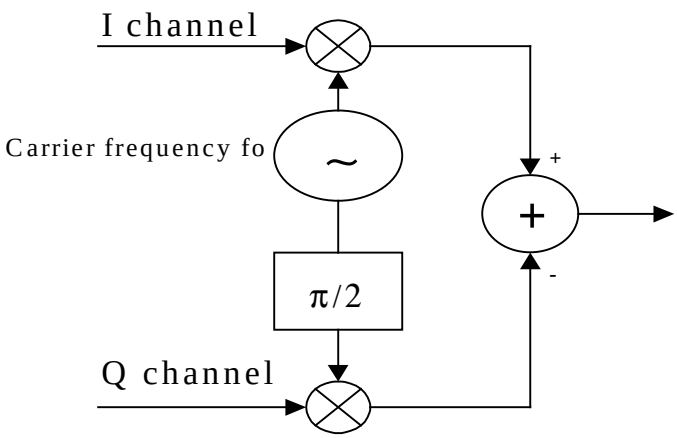

Modulator description

2.2.4 Transmitter power output

The transmitter power output shall be within the limits of 5 W +/- 2 dB (35 to 39 dBm) measured into a 50-Ohm load with a voltage standing-wave ratio (VSWR not greater than 1.25:1. This power output shall be maintained during 24-hour operation at any temperature throughput the specified operating temperature range. Power output rise time shall be less than 5 ms measured between the 10% and 90% power points.

2.2.5 Antenna characteristics

The following antenna characteristics are defined for elevation angles greater than 5° and less than 60° :

- Pattern : hemispherical,
- Polarization : linear or circular (RHCP),
- Gain : between - 3 dBi and 4 dBi over 90% of the above region
- Gain variation (azimuth) : less than 3dB,
- Antenna VSWR : not greater than 1.5:1.

The antenna characteristics should be measured in a configuration as close as possible to its operational condition.

2.2.6 Spurious transmissions

See C/S T.001 , § 2.3.4.

3 DIGITAL MESSAGE STRUCTURE

The digital message ("user part" as described in § 2.1.4.6) which is transmitted by the 406 Mhz beacon consists of :

The data bits shall be determined later by Cospas/Sarsat.

- 88 bits for the short message (+ 8 bits "0" for message end) ; and

- 120 bits for the long message (+ 9 bits "0" for message end)

This is the length of the current 406 MHz beacon messages as defined in the Cospas-Sarsat document C/S T001 the requirements of which in terms of beacon coding can be met by the new Sarsat-3 beacons.

However, considering that :

- the SARP-3 on-board processing doesn't check the digital message content, it just recovers the bits and formatting them in the Processed Data Stream (PDS) as defined in the Cospas-Sarsat document C/S T003.

- the SARP-3 on-board processing recognizes the new beacons and inserts this information in the PDS as defined in C/S T003.

- the short message is not really adequate for the transmission of accurate location data coming for a built-in GNSS receiver.

- there may not be the same requirement concerning the use of BCH error-correcting code as it is now implemented on present 406 MHz beacons (ref. C/S .T.001) since some level of bit protection and correction would be given by the convolutional code.

a new content for the long messages should be defined by Cospas-Sarsat for use with the MEOSAR systems.