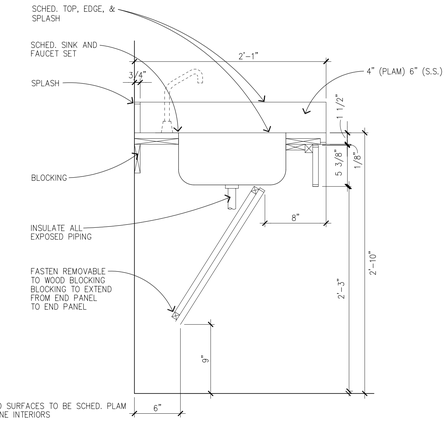


1 MILLWORK DETAIL
A610 A720 SCALE: 1 1/2" = 1'-0"

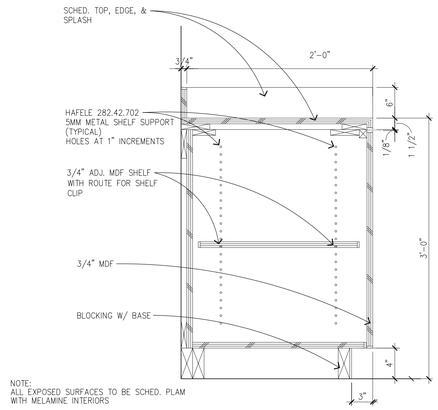


2 MILLWORK DETAIL
A610 A720 SCALE: 1 1/2" = 1'-0"

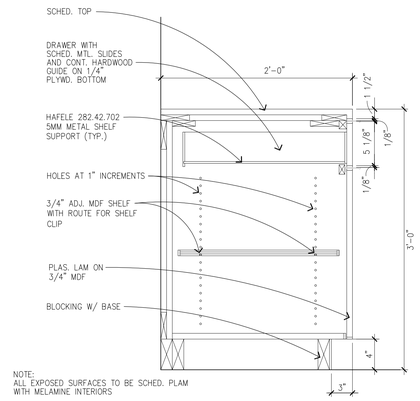


3 MILLWORK DETAIL
A610 A720 SCALE: 1 1/2" = 1'-0"

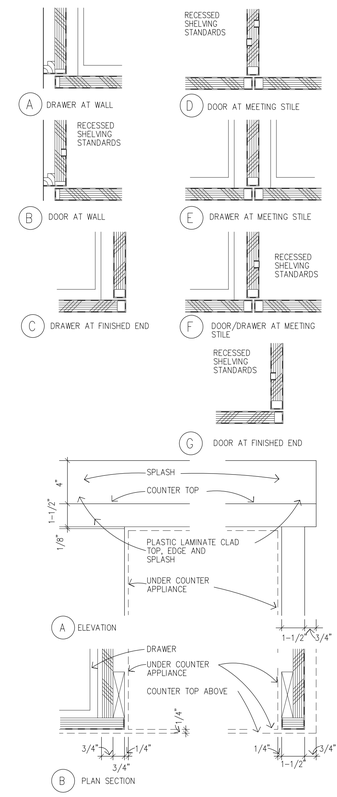


7 MILLWORK DETAIL
A610 A720 SCALE: 3/8" = 1'-0"

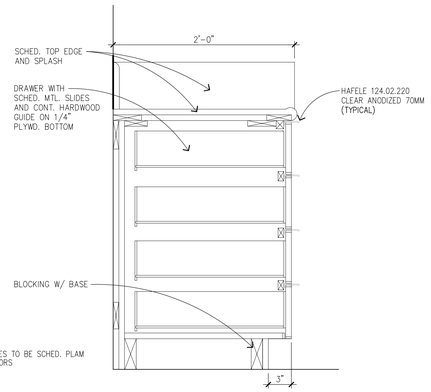


4 MILLWORK DETAIL
A610 A720 SCALE: 1 1/2" = 1'-0"

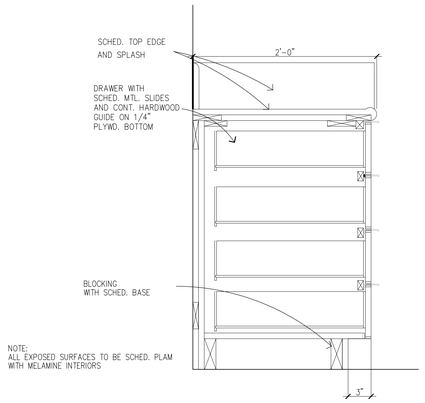


5 MILLWORK DETAIL
A610 A720 SCALE: 1 1/2" = 1'-0"

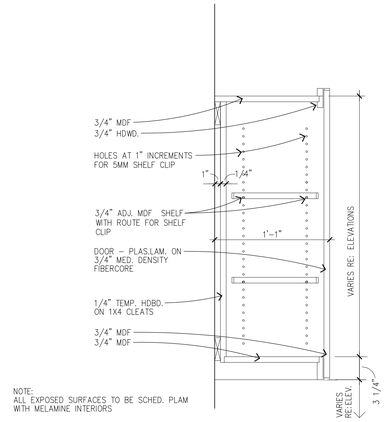


6 MILLWORK DETAIL
A610 A720 SCALE: 1 1/2" = 1'-0"

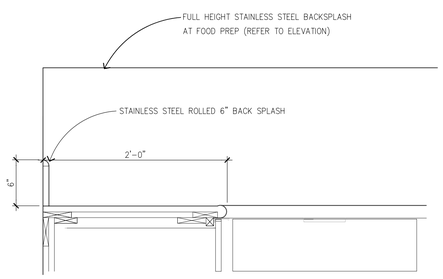


8 MILLWORK DETAIL
A610 A720 SCALE: 1 1/2" = 1'-0"

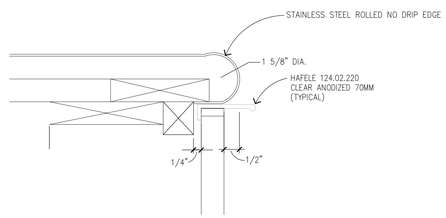


9 MILLWORK DETAIL
A610 A720 SCALE: 1'-6" = 1'-0"

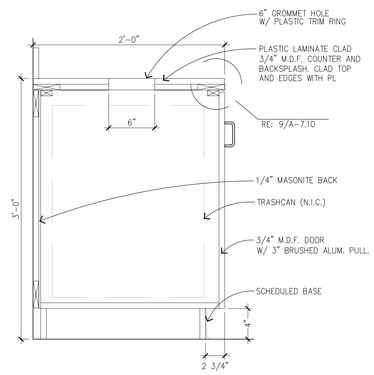


10 MILLWORK DETAIL
A610 A720 SCALE: 1 1/2" = 1'-0"

1 DIMENSION SIZE CORRECTED

REGISTERED ARCHITECT GARY L. ALTGELT STATE OF TEXAS
8-21-03

| REVISION | DATE | DESCRIPTION |
|---|---|---|
| 1 | 8/29/03 | ADDENDUM NO. 1 |

| SIGNATURES | | DATE |
|---|---|---|
| DR. | ENG | |
| CH | APPR | |
| REV | | |
| DISCP | | |
| PE | | |
| APPR | | |

NATIONAL AERONAUTICS & SPACE ADMINISTRATION
LYNDON B. JOHNSON SPACE CENTER HOUSTON, TEXAS

BUILDING 27
ASTRONAUT QUARANTINE FACILITY

MILLWORK DETAILS

PROJECT NO. 02104 | SHEET NO. A-27-02104 23 OF 24
PROJECT ID WR 02104 | DWG NO. A-27-720
CODE IDENT.NO. 2116 | SIZE F

morris architects
3355 W. Alabama, Suite 200 • Houston, Texas 77098
713.622.1180 phone • 713.622.7021 fax
www.morrisarchitects.com • ftp.morrisarchitects.com