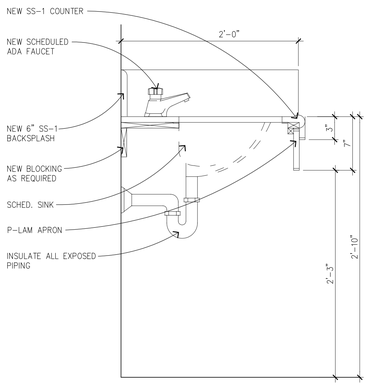

NOTE:
ALL EXPOSED SURFACES TO BE SCHED. PLAS. LAM. WITH MELAMINE INTERIORS

1 A610 A710 MILLWORK DETAIL
SCALE: 1 1/2" = 1'-0"

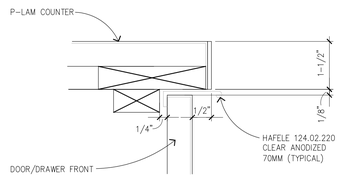

2 A610 A710 MILLWORK DETAIL
SCALE: 3" = 1'-0"

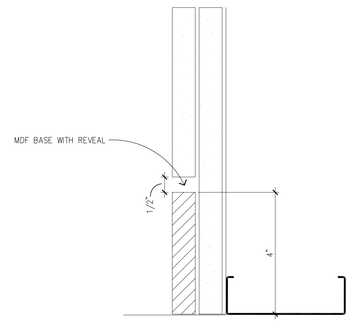

3 A610 A710 BASE DETAIL
SCALE: 3" = 1'-0"

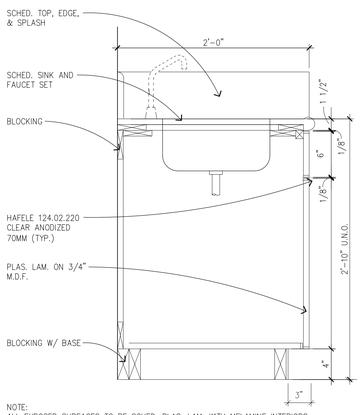

NOTE:
ALL EXPOSED SURFACES TO BE SCHED. PLAS. LAM. WITH MELAMINE INTERIORS

4 A610 A710 MILLWORK DETAIL
SCALE: 1 1/2" = 1'-0"

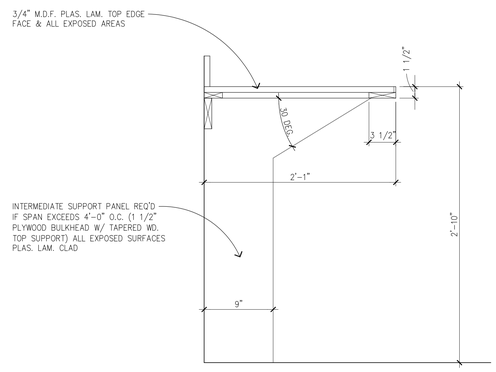

5 A610 A710 MILLWORK DETAIL
SCALE: 1 1/2" = 1'-0"

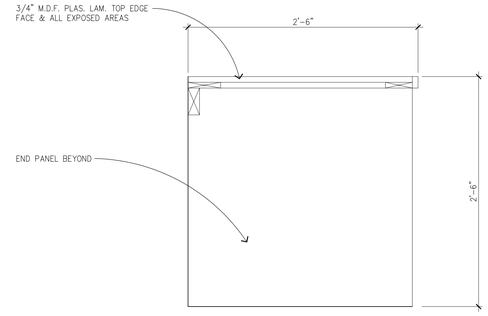

6 A610 A710 MILLWORK DETAIL
SCALE: 1 1/2" = 1'-0"

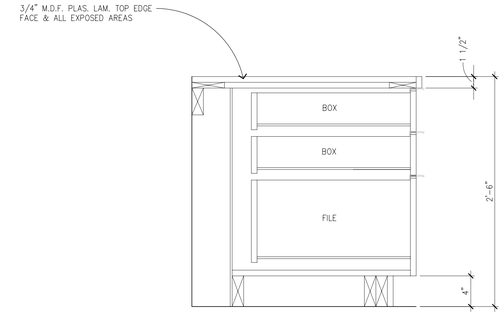

7 A610 A710 MILLWORK DETAIL
SCALE: 1 1/2" = 1'-0"

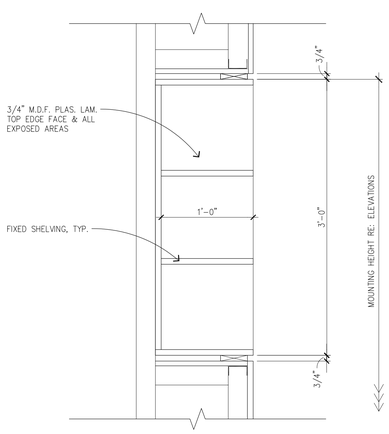

8 A610 A710 MILLWORK DETAIL
SCALE: 1 1/2" = 1'-0"

1 DIMENSION SIZE CORRECTED

REGISTERED ARCHITECT GARY L. ALTERGOTT STATE OF TEXAS
8-29-03

REVISION	DATE	DESCRIPTION
1	8/29/03	ADDENDUM NO. 1

SIGNATURES		DATE
DR.	ENG	
CH	APPR	
REV		
DISCP		
PE		
APPR		

NATIONAL AERONAUTICS & SPACE ADMINISTRATION
LYNDON B. JOHNSON SPACE CENTER HOUSTON, TEXAS

BUILDING 27
ASTRONAUT QUARANTINE FACILITY
MILLWORK DETAILS

PROJECT NO. 02104
PROJECT ID 02104 WR
CODE IDENT.NO. 2116 SIZE F
SHEET NO. A-27-02104 22 OF 24
DWG NO. A-27-710

morris architects
3355 W. Alabama, Suite 200 • Houston, Texas 77098
713.622.1180 phone • 713.622.7021 fax
www.morrisarchitects.com • ftp.morrisarchitects.com