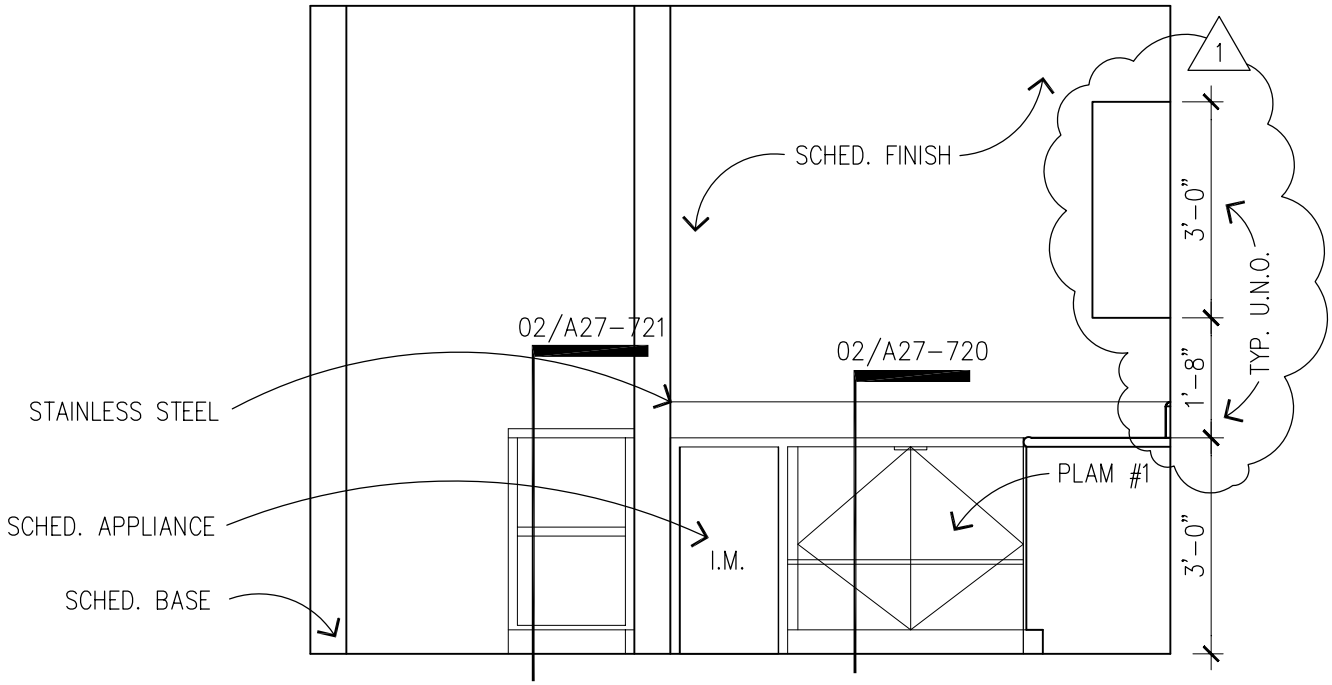

REVISION	DATE	DESCRIPTION
1	08-29-03	ADDENDUM NO. 1

NATIONAL AERONAUTICS & SPACE ADMINISTRATION
LYNDON B. JOHNSON SPACE CENTER HOUSTON, TEXAS

ASTRONAUT QUARANTINE FACILITY BUILDING 27

REGISTERED ARCHITECT
GARY L. ALTERGOTT
STATE OF TEXAS
8-29-03

PROJECT NO. 02104	SHEET NO.
PROJECT ID 02104	SKT. NO. A-27-610.01
CODE IDENT.NO. 2116	