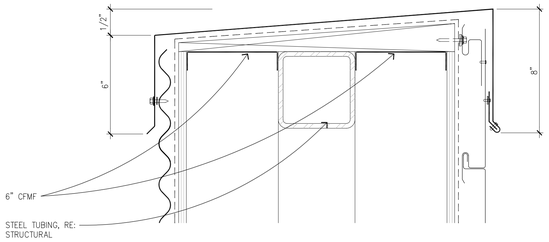

RE: DETAIL 04/A401 FOR APPLICABLE NOTES

1 EXTERIOR WALL DETAIL
A320 A401 SCALE: 3"=1'-0"

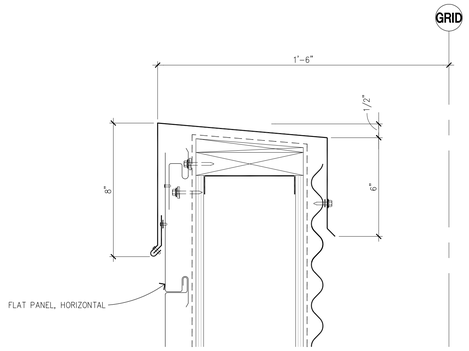

RE: DETAIL 04/A401 FOR APPLICABLE NOTES

2 EXTERIOR WALL DETAIL
A321 A401 SCALE: 3"=1'-0"

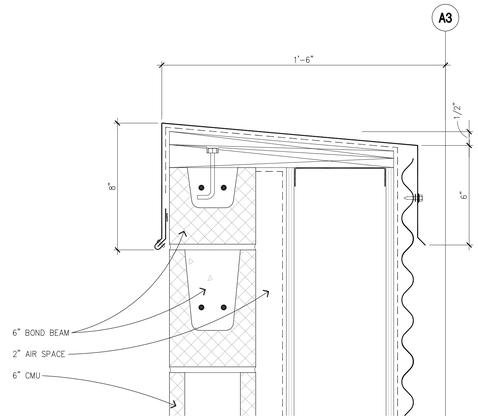

RE: DETAIL 04/A401 FOR APPLICABLE NOTES

3 EXTERIOR WALL DETAIL
A320 A401 SCALE: 3"=1'-0"

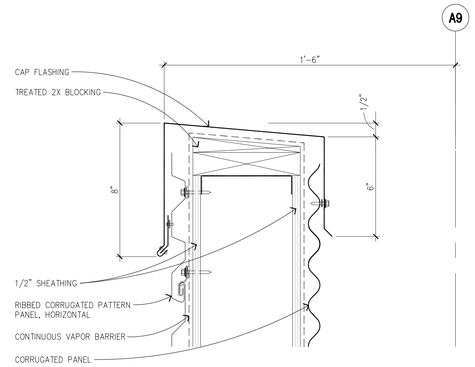

4 EXTERIOR WALL DETAIL
A320 A401 SCALE: 3"=1'-0"

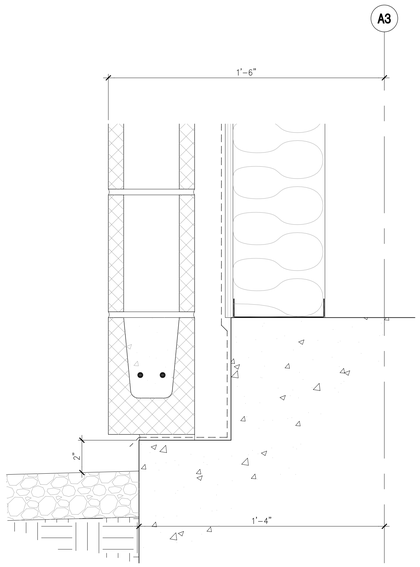

RE: DETAIL 07/A401 & 08/A401 FOR APPLICABLE NOTES

5 EXTERIOR WALL DETAIL
A320 A401 SCALE: 3"=1'-0"

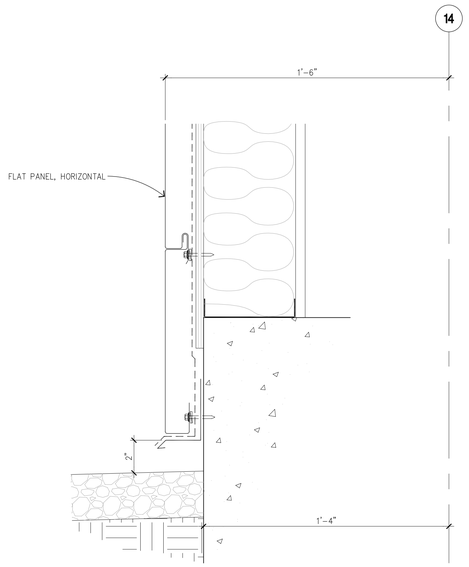

RE: DETAIL 08/A401 FOR APPLICABLE NOTES

6 EXTERIOR WALL DETAIL
A322 A401 SCALE: 3"=1'-0"

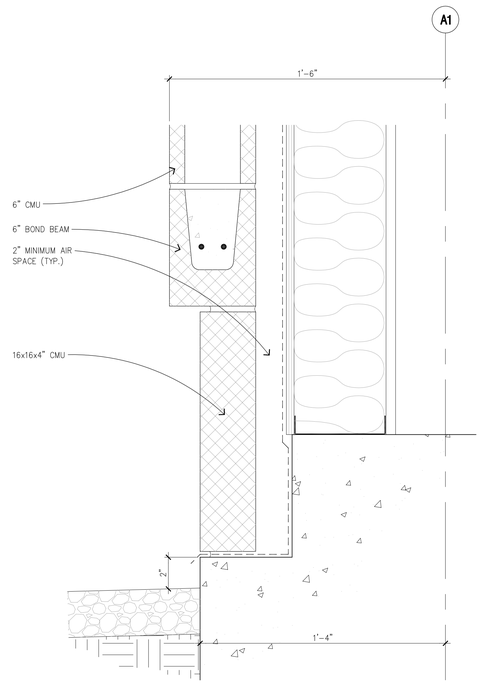

RE: DETAIL 08/A401 FOR APPLICABLE NOTES

7 EXTERIOR WALL DETAIL
A322 A401 SCALE: 3"=1'-0"

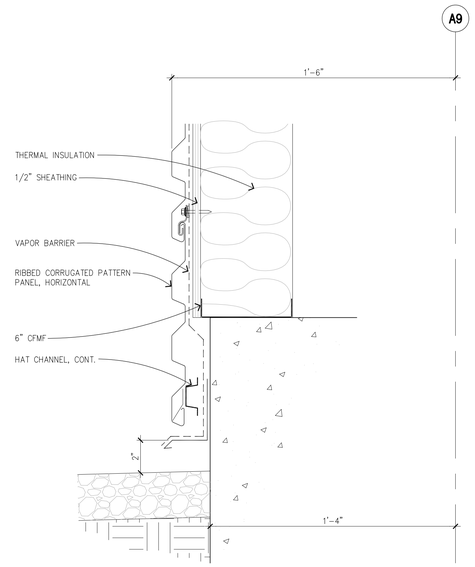

8 EXTERIOR WALL DETAIL
A321 A401 SCALE: 3"=1'-0"

ARCHITECTURAL LEED CREDITS
(PARTIAL LIST)

REFERENCE	DESCRIPTION
MR-4.1	Specify a minimum of 25% of building materials as recycled. – This is not difficult with concrete and steel, etc.
MR-4.2	Specify an additional 25% of building materials as recycled. – By weighted average the concrete, cmu, steel, carpet, and other materials should meet this objective.
MR-5.1	Specify a minimum of 20% of building materials that are manufactured within a radius of 500 miles. – Easy for the Houston market.
MR-5.2	Of these regionally manufactured materials, specify a minimum of 50% extracted, harvested, or recovered within a 500 mile radius. – More difficult but due to the materials specified, it is achievable.
MR-7	Use a minimum of 50% or wood based materials certified in accordance with the Forest Stewardship Council Guidelines for wood building components. – Certified wood is available and there is not much used for this project.

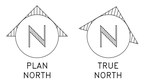

morris architects
3355 W. Alabama, Suite 200 • Houston, Texas 77098
713.622.1180 phone • 713.622.7021 fax
www.morrisarchitects.com • ftp.morrisarchitects.com

REVISION	DATE	DESCRIPTION
1	8/29/03	ADDENDUM NO. 1

SIGNATURES		DATE
DR.	ENG	
CH	APPR	
REV		
DISCP		
PE		
APPR		

NATIONAL AERONAUTICS & SPACE ADMINISTRATION
LYNDON B. JOHNSON SPACE CENTER HOUSTON, TEXAS

BUILDING 27
ASTRONAUT QUARANTINE FACILITY

EXTERIOR DETAILS

PROJECT NO. 02104
PROJECT ID 02104 WR
CODE IDENT.NO. 2116 SIZE F
SHEET NO. A-27-02104 16 OF 24
DWG NO. A-27-401