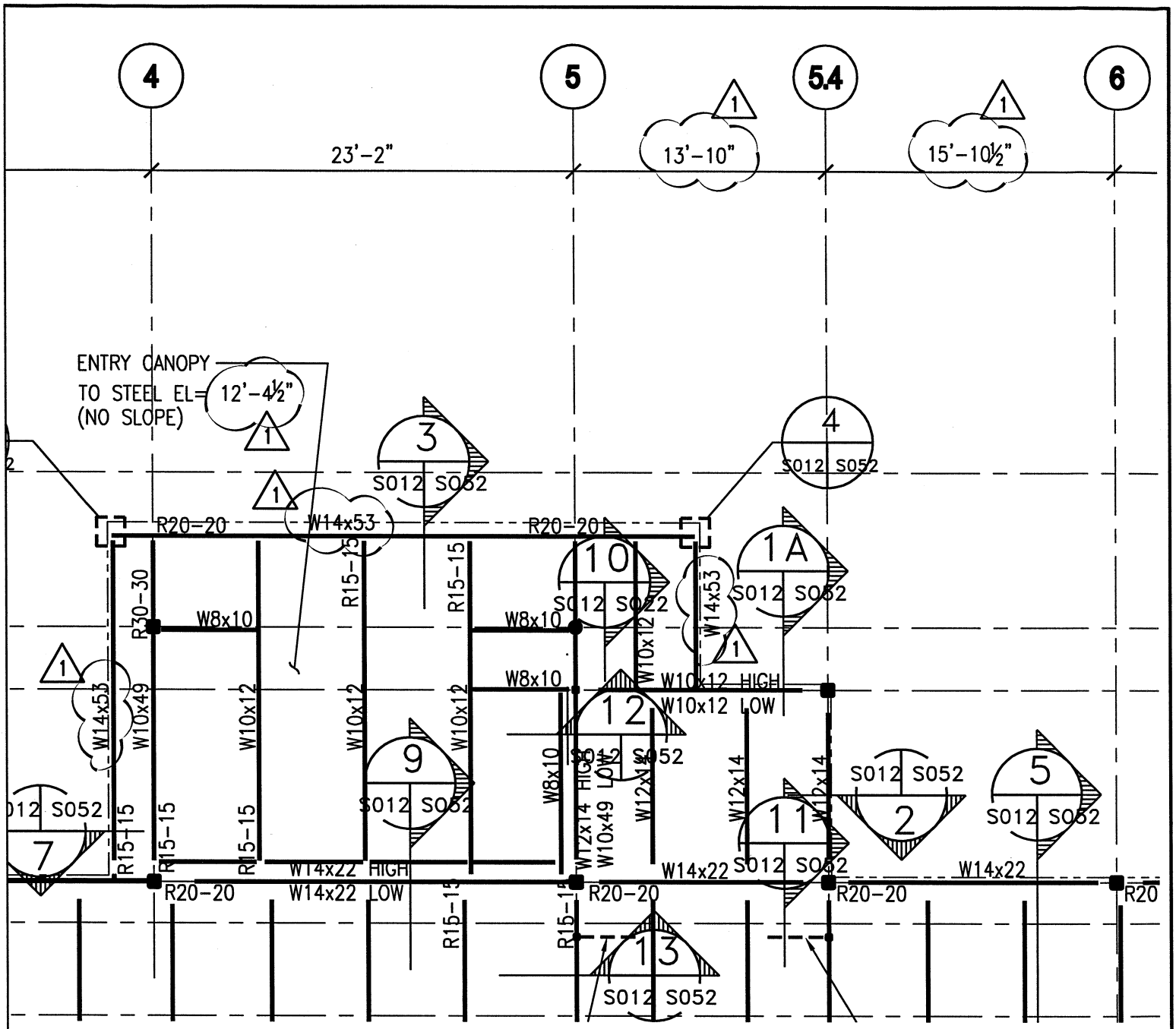

1 ROOF PLAN

SCALE: 1/8" = 1'-0"

REVISION	DATE	DESCRIPTION
1	08-29-03	ADDENDUM NO. 1

NATIONAL AERONAUTICS & SPACE ADMINISTRATION
LYNDON B. JOHNSON SPACE CENTER HOUSTON, TEXAS

ASTRONAUT QUARANTINE FACILITY BUILDING 27

ROOF PLAN

STATE OF TEXAS
BRIAN H. CAUDLE
55381
LICENSED PROFESSIONAL ENGINEER
8/28/03

PROJECT NO. 02104	SHEET NO. S-27-02104
PROJECT ID 02104	SKT. NO. S-27-012.01
CODE IDENT.NO. 2116	

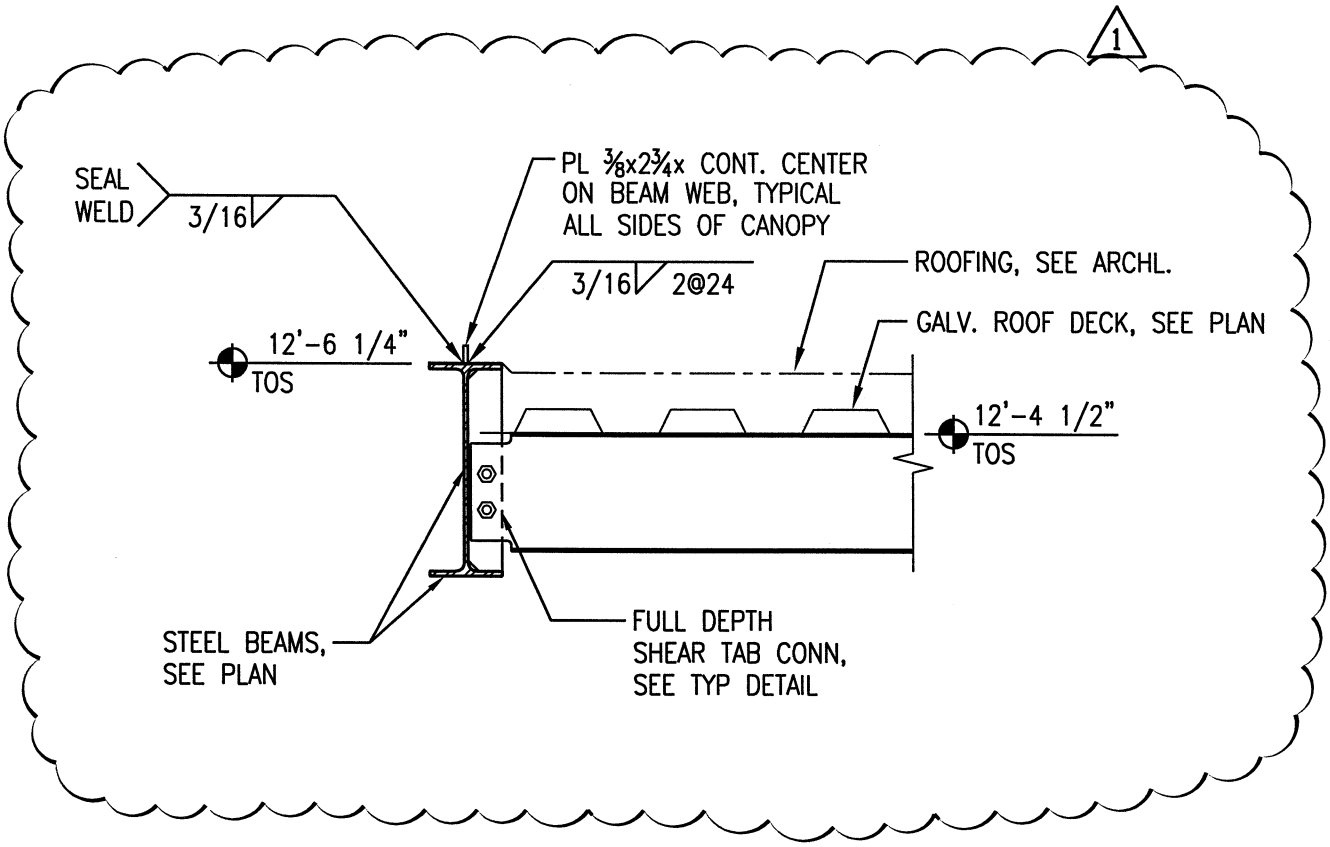

3
12 52

SCALE: 3/4" = 1'-0"

REVISION	DATE	DESCRIPTION
1	08-29-03	ADDENDUM NO. 1

NATIONAL AERONAUTICS & SPACE ADMINISTRATION
LYNDON B. JOHNSON SPACE CENTER HOUSTON, TEXAS

ASTRONAUT QUARANTINE FACILITY BUILDING 27

STEEL SECTIONS AND DETAILS

PROJECT NO. 02104	SHEET NO. S-27-02104
PROJECT ID 02104	SKT. NO. S-27-052.01
CODE IDENT.NO. 2116	

STATE OF TEXAS
BRIAN H. CAUDLE
55381
LICENSED PROFESSIONAL ENGINEER
8/28/03

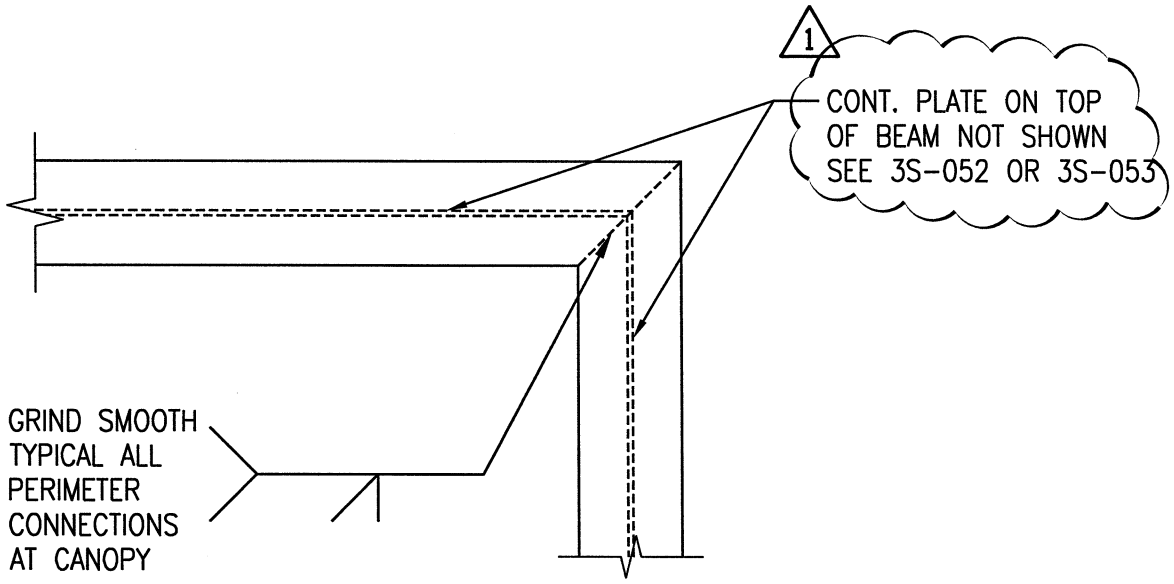

4 / 12 52

PLAN DETAIL

SCALE: 3/4" = 1'-0"

REVISION	DATE	DESCRIPTION
1	08-29-03	ADDENDUM NO. 1

NATIONAL AERONAUTICS & SPACE ADMINISTRATION
LYNDON B. JOHNSON SPACE CENTER HOUSTON, TEXAS

ASTRONAUT QUARANTINE FACILITY BUILDING 27

STEEL SECTIONS AND DETAILS

STATE OF TEXAS
BRIAN H. CAUDLE
55381
LICENSED PROFESSIONAL ENGINEER
8/28/03

PROJECT NO. 02104	SHEET NO. S-27-02104
PROJECT ID 02104	SKT. NO. S-27-052.02
CODE IDENT.NO. 2116	

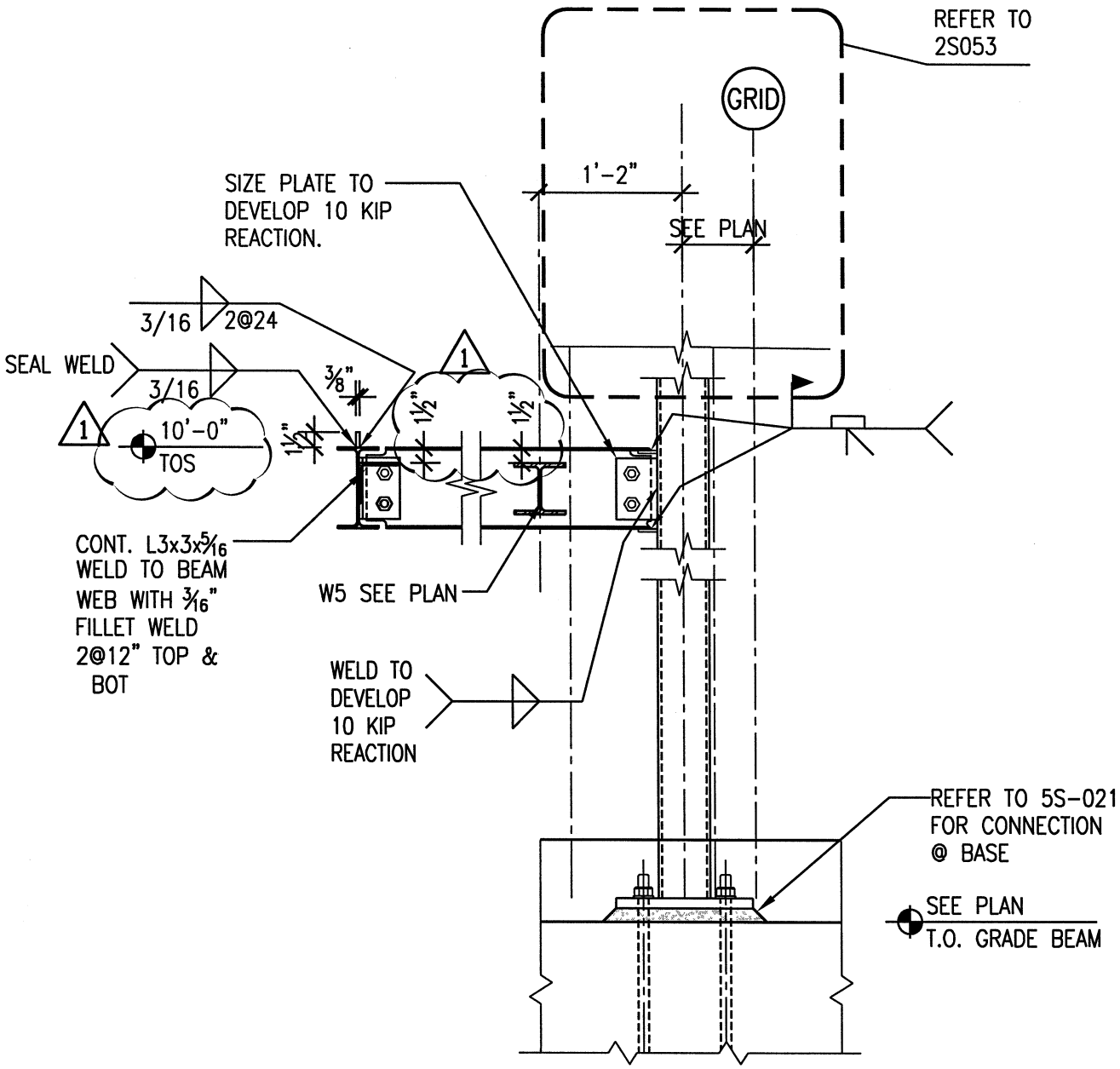

3
12 53

NTS

REVISION	DATE	DESCRIPTION
1	08-29-03	ADDENDUM NO. 1

NATIONAL AERONAUTICS & SPACE ADMINISTRATION
LYNDON B. JOHNSON SPACE CENTER HOUSTON, TEXAS

ASTRONAUT QUARANTINE FACILITY BUILDING 27

STEEL SECTIONS AND DETAILS

STATE OF TEXAS
BRIAN H. CAUDLE
55381
LICENSED PROFESSIONAL ENGINEER
8/28/03

PROJECT NO. 02104	SHEET NO. S-27-02104
PROJECT ID 02104	SKT. NO. S-27-053.01
CODE IDENT.NO. 2116	