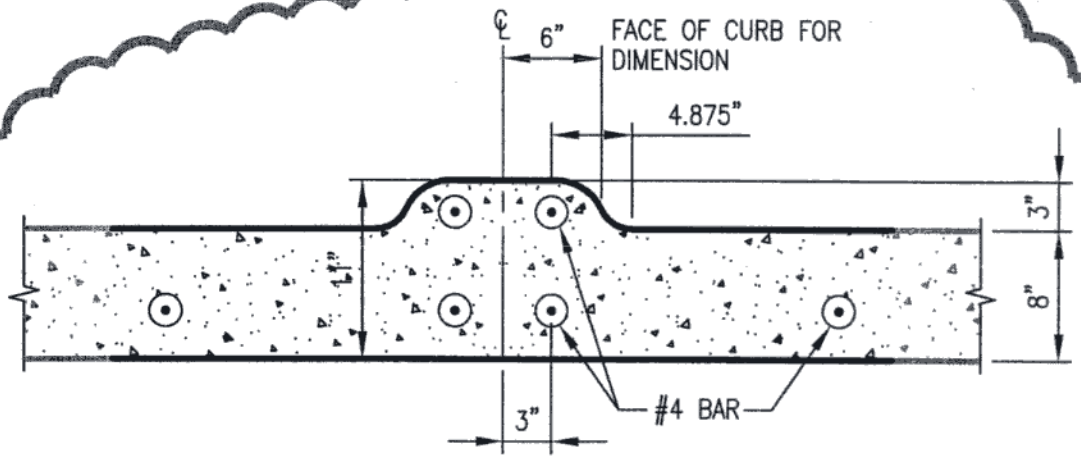

*POURED MONOLITHICALLY WITH PAVEMENT

6 / 7|2 3" ROAD BUMP

NOT TO SCALE

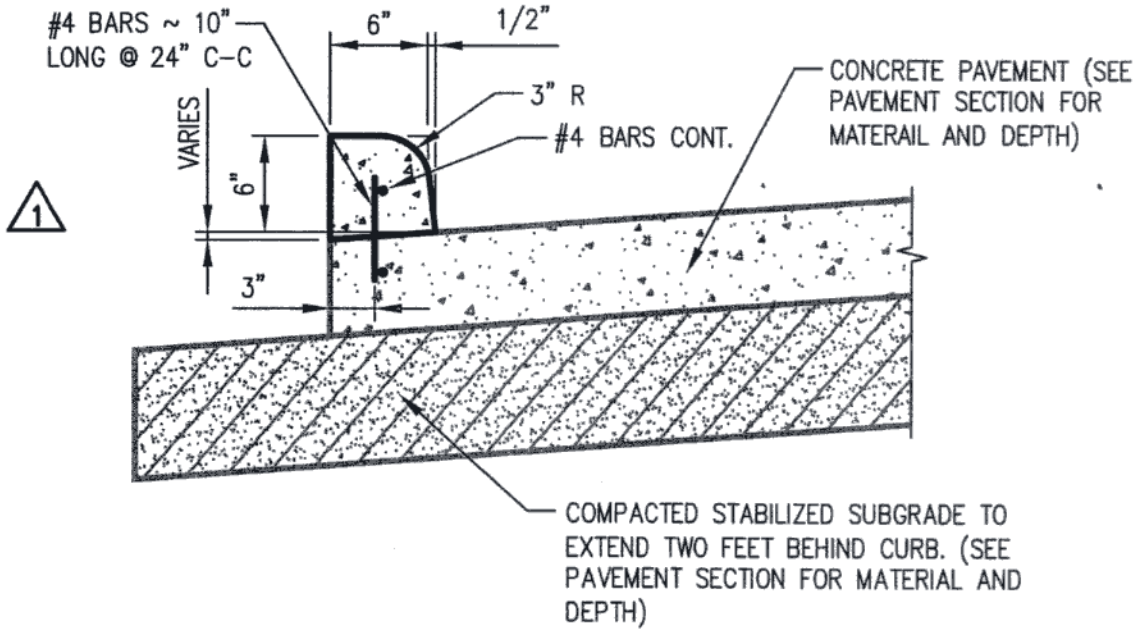

1

7 / 7|2 DOWELLED ON CONCRETE CURB

NOT TO SCALE

REVISION	DATE	DESCRIPTION
1	08-14-03	ADDENDUM NO. 1

NATIONAL AERONAUTICS & SPACE ADMINISTRATION
LYNDON B. JOHNSON SPACE CENTER HOUSTON, TEXAS

ASTRONAUT QUARANTINE FACILITY BUILDING 27

DETAILS

STATE OF TEXAS
SRINIVASA R. PINNAPUREDDY
89577
LICENSED
PROFESSIONAL ENGINEER

S.R. Pinnapureddy 8/28/03

PROJECT NO. 02104	SHEET NO. C-27-02104
PROJECT ID 02104	SKT. NO. C-27-007
CODE IDENT.NO. 2116	