SYMBOL	LETTER	ZONE	DESCRIPTION	DATE	APPROVAL

BAY #1	BAY #2	BAY #3	BAY #4
RELAY CABINET FOR PLC CONTROLLER	FVNR NEMA SIZE 2	BLANK	C/B 50A COMPAC
			BLANK
	PANEL 3ø, 18 CKT 120/208V 100A MLO	SSRV CONTROLLER C/B * 150 HP	BLANK
			METER (1)
	XFMR 15 KVA 3ø 4W 25A C/B (480V) 40A C/B (208V)		TVSS 30A C/B (2)
			MAIN 450A C/B

* TO BE SIZED BY MANUFACTURER TO PROVIDE PROPER SHORT CIRCUIT PROTECTION OF MOTOR IT IS TO PROTECT.

SCHEDULE – MOTOR CONTROL CENTER
480 VAC, 3ø, 4W, 42KA, NEMA 3R
600A INCOMING, 600A HORIZONTAL, 300A VERTICAL

SECTION/UNIT LOCATION	DESC	NEMA SIZE	CB TRIP (A)	AUX INTLKS NO	AUX INTLKS NC	SELECTOR SWITCHES	INDICATING LIGHTS	IDENTIFICATIONS
1								
2A	FVNR	2	70	2	2	H-O-A	PUSH-TO-TEST GREEN, RED	SPARE
2E	C/B		40					100A, 3ø, 18 CKT, PNL
2N	C/B		25					15 KVA, 3ø, 4W, XFMRS
3A								
3D	SSRV	N/A	*	2	2	H-O-A	PUSH-TO-TEST GREEN, RED	PFE-1 PUMP
4A	C/B		50					SPARE
4C								
4G								
4K								METER (1)
4P			30					TVSS (2)
4T			450					MAIN

SCHEDULE – PANEL "LA"

BUILDING: PFE-1	LOCATION: MCC		PHASE: 3
TYPE:	FEED:		WIRE: 4
MANUFACTURER:	SC RATING: 10,000		VOLTAGE: 120/208
MODEL:	MAIN AMPS:		MOUNTING: INTERNAL TO MCC
CONFIGURATION:	PANEL AMPS: 100 MLO COPPER		

CKT NO	POLE	BKR TRIP	LOAD DESCRIPTION	ø LOAD (AMPS) A	B	C	CKT NO	POLE	BKR TRIP	LOAD DESCRIPTION	ø LOAD (AMPS) A	B	C
1	1	20	PLC POWER	10			2	1	–	SPACE ONLY			
3	1	20	PLC RECEPT		1.5		4	1	–				
5	1	20	PFE-1 VAULT RECEPT			1.5	6	1	–				
7	1	20	PFE-1 FLOW METER	.83			8	1	–				
9	1	20	MCC RECEPT		1.5		10	1	–				
11	1	20	SPARE				12	1	–				
13	1	20	SPARE				14	1	–				
15	1	–	SPACE ONLY				16	1	–				
17	1	–					18	1	–				
TOTAL CONNECTED LOAD PER PHASE, AMPS							TOTAL CONNECTED LOAD PER PHASE, AMPS						
TOTAL CONNECTED LOAD 3-PHASE, AMPS							TOTAL CONNECTED LOAD 3-PHASE, AMPS						

KEYED NOTES:

(1) FURNISH STANDARD METER SLOT OPENING IN FRONT OF MCC'S PANEL COVER. PROIVDE CLEAR PLASTIC WEATHER PROOF COVER OVER OPENING. METER DEVICE AND ASSOCIATED CT'S AND PT'S TO BE FURNISHED AND INSTALLED BY OTHERS.

(2) FURNISH MANUFACTURER'S STANDARD TVSS PROTECTION INTEGRAL WITH MCC.

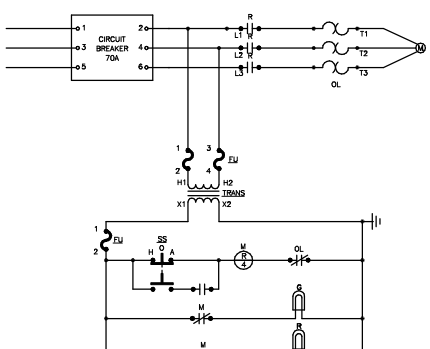

SPARE

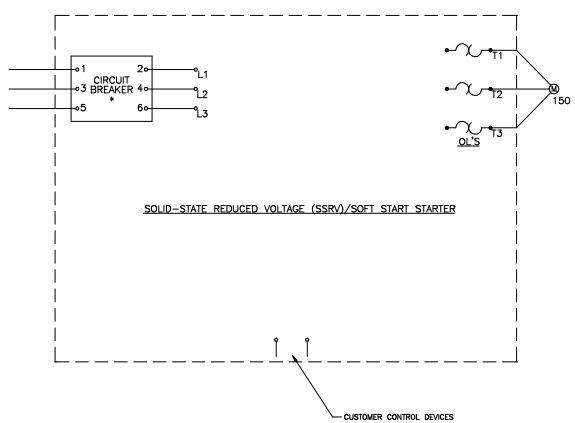

PFE-1 PUMP

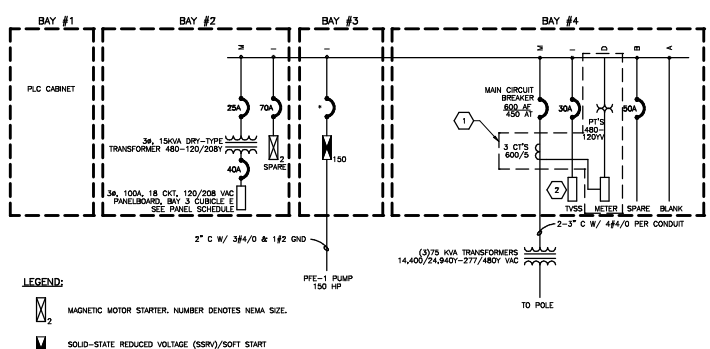

LEGEND:

MAGNETIC MOTOR STARTER. NUMBER DENOTES NEMA SIZE.

SOLID-STATE REDUCED VOLTAGE (SSRV)/SOFT START CONTROLLER. HORSEPOWER RATING NOTED.

MOTOR CONTROL CENTER ONE-LINE DIAGRAM

REQ'D PER ASSY	ITEM NO.	PART NO.	DESCRIPTION	MATERIAL	SPECIFICATION	SH. NO.

NEXT ASSY / RELATED DWG'S

DIMENSIONAL TOLERANCE UNLESS NOTED OTHERWISE
.0± ANGLES ±
.00± FRACTIONS ±
.000±
DIMENSIONS ARE IN INCHES.
SURFACE FINISH IN MICRO INCHES RMS UNLESS OTHERWISE NOTED.
UNLESS NOTED OTHERWISE REMOVE ALL SHARP EDGES AND BURRS.

DRAWN BY	M. TARIN	2-18-00
ENGINEER	A. HERNANDEZ	2-18-00
DESIGNED BY	A. HERNANDEZ	2-18-00
CHECKED BY		
APPROVAL		
APPROVAL		
AUTHORIZED		
RELEASE		

National Aeronautics and Space Administration
Lyndon B. Johnson Space Center
White Sands Test Facility

WSTF – PLUME-FRONT REMEDIATION EXTRACTION WELL PFE-1 ELECTRICAL DETAILS

CODE IDENT.	SIZE	DWG. NO.	REV.
	F	653-E-02	

A.S. DWG. NO. | SCALE NONE | SHEET 1 OF 1

SYMBOL	LETTER	ZONE	DESCRIPTION	DATE	APPROVAL

BAY #1	BAY #2	BAY #3	BAY #4
RELAY CABINET FOR PLC CONTROLLER	FVNR NEMA SIZE 2	BLANK	C/B 50A COMPAC
			BLANK
	PANEL 3ø, 18 CKT 120/208V 100A MLO	SSRV CONTROLLER C/B * 100 HP	BLANK
			METER (1)
	XFMR 15 KVA 3ø 4W 25A C/B (480V) 40A C/B (208V)		TVSS 30A C/B (2)
			MAIN 300A C/B

* TO BE SIZED BY MANUFACTURER TO PROVIDE PROPER SHORT CIRCUIT PROTECTION OF MOTOR IT IS TO PROTECT.

SCHEDULE – MOTOR CONTROL CENTER
480 VAC, 3ø, 4W, 42KA, NEMA 3R
600A INCOMING, 600A HORIZONTAL, 300A VERTICAL

SECTION/UNIT LOCATION	DESC	NEMA SIZE	CB TRIP (A)	AUX INTLKS NO	AUX INTLKS NC	SELECTOR SWITCHES	INDICATING LIGHTS	IDENTIFICATIONS
1								
2A	FVNR	2	70	2	2	H–O–A	PUSH–TO–TEST GREEN, RED	SPARE
2E			40					100A, 3ø, 24 CKT, PNL
2N			25					15 KVA, 3ø, 4W, XFMRS
3A								
3D	SSRV	N/A	*	2	2	H–O–A	PUSH–TO–TEST GREEN, RED	PFE–2 PUMP
4A	C/B		50					SPARE
4C								
4G								
4K								METER (1)
4P			30					TVSS (2)
4T			300					MAIN

SCHEDULE – PANEL "LA"

BUILDING: PFE–2	LOCATION: MCC	PHASE: 3
TYPE:	FEED:	WIRE: 4
MANUFACTURER:	SC RATING: 10,000	VOLTAGE: 120/208
MODEL:	MAIN AMPS:	MOUNTING: INTERNAL TO MCC
CONFIGURATION:	PANEL AMPS: 100 MLO COPPER	

CKT NO	POLE	BKR TRIP	LOAD DESCRIPTION	@ LOAD (AMPS) A	B	C	CKT NO	POLE	BKR TRIP	LOAD DESCRIPTION	@ LOAD (AMPS) A	B	C
1	1	20	PLC POWER	10			2	1	–	SPACE ONLY			
3	1	20	PLC RECEPT		1.5		4	1	–				
5	1	20	PFE–2 VAULT RECEPT			1.5	6	1	–				
7	1	20	PFE–2 FLOW METER	.83			8	1	–				
9	1	20	MCC RECEPT		1.5		10	1	–				
11	1	20	SPARE				12	1	–				
13	1	20	SPARE				14	1	–				
15	1	–	SPACE ONLY				16	1	–				
17	1	–					18	1	–				
TOTAL CONNECTED LOAD PER PHASE, AMPS							TOTAL CONNECTED LOAD PER PHASE, AMPS						
TOTAL CONNECTED LOAD 3–PHASE, AMPS							TOTAL CONNECTED LOAD 3–PHASE, AMPS						

KEYED NOTES:

(1) FURNISH STANDARD METER SLOT OPENING IN FRONT OF MCC'S PANEL COVER. PROVIDE CLEAR PLASTIC WEATHER PROOF COVER OVER OPENING. METER DEVICE AND ASSOCIATED CT'S AND PT'S TO BE FURNISHED AND INSTALLED BY OTHERS.

(2) FURNISH MANUFACTURER'S STANDARD TVSS PROTECTION INTEGRAL WITH MCC.

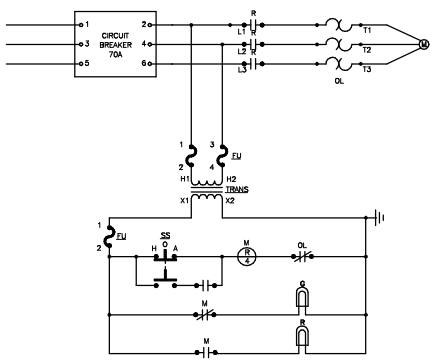

SPARE

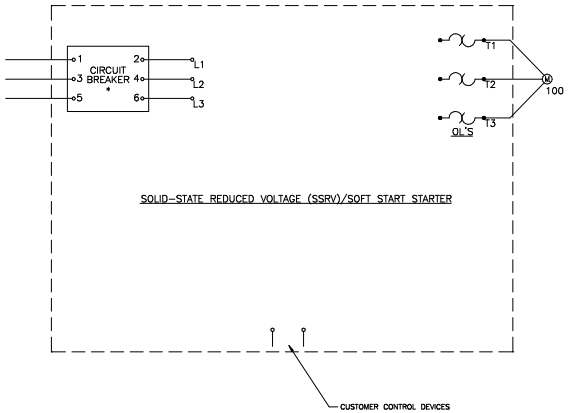

PFE–2 PUMP

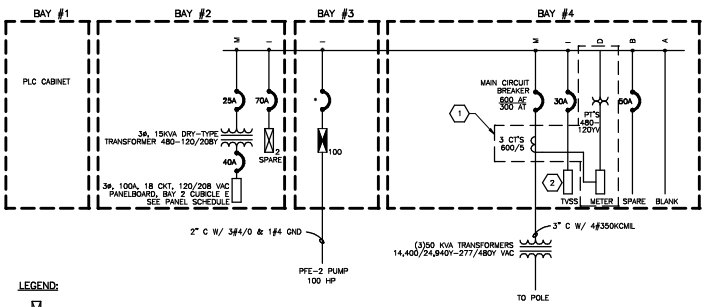

LEGEND:

MAGNETIC MOTOR STARTER. NUMBER DENOTES NEMA SIZE.

SOLID–STATE REDUCED VOLTAGE (SSRV)/SOFT START CONTROLLER. HORSEPOWER RATING NOTED.

MOTOR CONTROL CENTER ONE–LINE DIAGRAM

REQ'D PER ASSY	ITEM NO.	PART NO.	DESCRIPTION	MATERIAL	SPECIFICATION	SHT. NO.

DIMENSIONAL TOLERANCE UNLESS NOTED OTHERWISE
.X± ANGLES ±
.XX± FRACTIONS ±
.XXX± DIMENSIONS ARE IN INCHES.
SURFACE FINISH IN MICRO INCHES RMS UNLESS OTHERWISE NOTED. √
UNLESS NOTED OTHERWISE REMOVE ALL SHARP EDGES AND BURRS.

NEXT ASSY / RELATED DWG'S

DRAWN BY	M. TARIN	2–19–00
ENGINEER	A. HERNANDEZ	2–19–00
DESIGNED BY	A. HERNANDEZ	2–19–00
CHECKED BY		
APPROVAL		
APPROVAL		
AUTHORIZED		
RELEASE		

National Aeronautics and Space Administration
Lyndon B. Johnson Space Center
White Sands Test Facility

WSTF – PLUME–FRONT REMEDIATION EXTRACTION WELL PFE–2 ELECTRICAL DETAILS

A.E. DWG. NO. | SCALE NONE | SHEET 1 OF 1

CODE IDENT. | SIZE F | DWG. NO. 654–E–02 | REV.

SYMBOL	LETTER	ZONE	DESCRIPTION	DATE	APPROVAL

BAY #1	BAY #2	BAY #3	BAY #4
RELAY CABINET FOR PLC CONTROLLER	FVNR NEMA SIZE 2	BLANK	C/B 50A COMPAC
			BLANK
	PANEL 3ø, 18 CKT 120/208V 100A MLO	SSRV CONTROLLER C/B * 100 HP	BLANK
			METER (1)
	XFMR 15 KVA 3ø 4W 25A C/B (480V) 40A C/B (208V)		TVSS 30A C/B (2)
			MAIN 300A C/B

* TO BE SIZED BY MANUFACTURER TO PROVIDE PROPER SHORT CIRCUIT PROTECTION OF MOTOR IT IS TO PROTECT.

SCHEDULE – MOTOR CONTROL CENTER
480 VAC, 3ø, 4W, 42KA, NEMA 3R
600A INCOMING, 600A HORIZONTAL, 300A VERTICAL

SECTION/UNIT LOCATION	DESIG	NEMA SIZE	CB TRIP (A)	AUX INTLKS NO	AUX INTLKS NC	SELECTOR SWITCHES	INDICATING LIGHTS	IDENTIFICATIONS
1								
2A	FVNR	2	70	2	2	H-O-A	PUSH-TO-TEST GREEN, RED	SPARE
2E			40					100A, 3ø, 24 CKT, PNL
2N			25					15 KVA, 3ø, 4W, XFMRS
3A								
3D	SSRV	N/A	*	2	2	H-O-A	PUSH-TO-TEST GREEN, RED	PFE-3 PUMP
4A	C/B		50					SPARE
4C								
4G								
4K								METER (1)
4P			30					TVSS (2)
4T			300					MAIN

KEYED NOTES:

(1) FURNISH STANDARD METER SLOT OPENING IN FRONT OF MCC'S PANEL COVER. PROVIDE CLEAR PLASTIC WEATHER PROOF COVER OVER OPENING. METER DEVICE AND ASSOCIATED CT'S AND PT'S TO BE FURNISHED AND INSTALLED BY OTHERS.

(2) FURNISH MANUFACTURER'S STANDARD TVSS PROTECTION INTEGRAL WITH MCC.

SCHEDULE – PANEL "LA"

BUILDING: PFE-3	LOCATION: MCC	PHASE: 3	
TYPE:	FEED:	WIRE: 4	
MANUFACTURER:	SC RATING: 10,000	VOLTAGE: 120/208	
MODEL:	MAIN AMPS:	MOUNTING: INTERNAL TO MCC	
CONFIGURATION:	PANEL AMPS: 100 MLO COPPER		

CKT NO	POLE	BKR TRIP	LOAD DESCRIPTION	ø LOAD (AMPS) A	B	C	CKT NO	POLE	BKR TRIP	LOAD DESCRIPTION	ø LOAD (AMPS) A	B	C
1	1	20	PLC POWER	10			2	1	–	SPACE ONLY			
3	1	20	PLC RECEPT		1.5		4	1	–				
5	1	20	PFE-3 VAULT RECEPT			1.5	6	1	–				
7	1	20	PFE-3 FLOW METER	.83			8	1	–				
9	1	20	MCC RECEPT		1.5		10	1	–				
11	1	20	SPARE				12	1	–				
13	1	20	SPARE				14	1	–				
15	1	–	SPACE ONLY				16	1	–				
17	1	–					18	1	–				
TOTAL CONNECTED LOAD PER PHASE, AMPS							TOTAL CONNECTED LOAD PER PHASE, AMPS						
TOTAL CONNECTED LOAD 3-PHASE, AMPS							TOTAL CONNECTED LOAD 3-PHASE, AMPS						

BAY #3

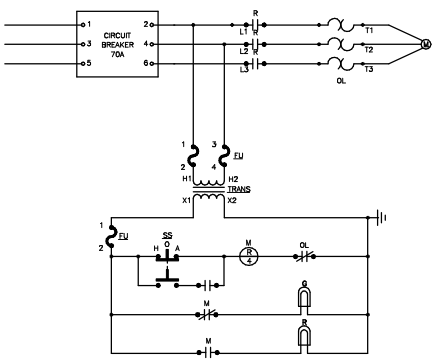

SPARE

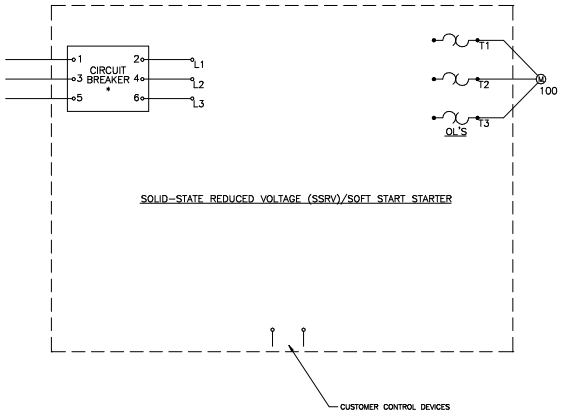

PFE-3 PUMP

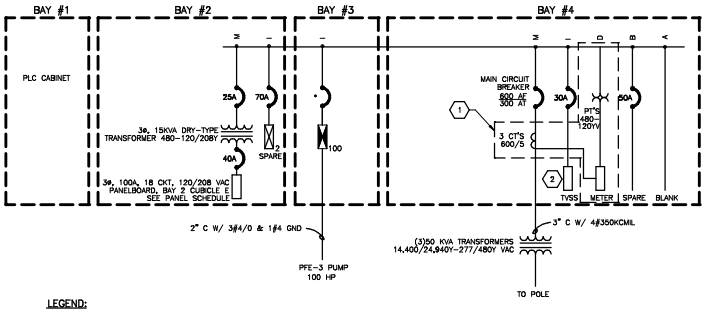

LEGEND:

MAGNETIC MOTOR STARTER. NUMBER DENOTES NEMA SIZE.

SOLID-STATE REDUCED VOLTAGE (SSRV)/SOFT START CONTROLLER. HORSEPOWER RATING NOTED.

MOTOR CONTROL CENTER ONE-LINE DIAGRAM

REQ'D PER ASSY	ITEM NO.	PART NO.	DESCRIPTION	MATERIAL	SPECIFICATION	SHT. NO.

DIMENSIONAL TOLERANCE UNLESS NOTED OTHERWISE
.X± ANGLES ±
.XX± FRACTIONS ±
.XXX±
DIMENSIONS ARE IN INCHES.
SURFACE FINISH IN MICRO INCHES RMS UNLESS OTHERWISE NOTED. √
UNLESS NOTED OTHERWISE REMOVE ALL SHARP EDGES AND BURRS.

NEXT ASSY / RELATED DWG'S

DRAWN BY	M. TARIN	2-19-00
ENGINEER	A. HERNANDEZ	2-19-00
DESIGNED BY	A. HERNANDEZ	2-19-00
CHECKED BY		
APPROVAL		
APPROVAL		
AUTHORIZED		
RELEASE		

National Aeronautics and Space Administration
Lyndon B. Johnson Space Center
White Sands Test Facility

WSTF – PLUME-FRONT REMEDIATION
EXTRACTION WELL PFE-3
ELECTRICAL
DETAILS

A.E. DWG. NO. | SCALE NONE | SHEET 1 OF 1

CODE IDENT. | SIZE F | DWG. NO. 655-E-02 | REV.

SYMBOL	LETTER	ZONE	DESCRIPTION	DATE	APPROVAL

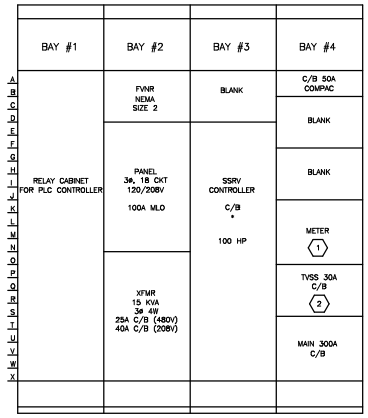

* TO BE SIZED BY MANUFACTURER TO PROVIDE PROPER SHORT CIRCUIT PROTECTION OF MOTOR IT IS TO PROTECT.

SCHEDULE – MOTOR CONTROL CENTER
480 VAC, 3ø, 4W, 42KA, NEMA 3R
600A INCOMING, 600A HORIZONTAL, 300A VERTICAL

SECTION/UNIT LOCATION	DESC	NEMA SIZE	CB TRIP (A)	AUX INTLKS NO	AUX INTLKS NC	SELECTOR SWITCHES	INDICATING LIGHTS	IDENTIFICATIONS
1								
2A	FVNR	2	70	2	2	H–O–A	PUSH–TO–TEST GREEN, RED	SPARE
2E			40					100A, 3ø, 24 CKT, PNL
2N			25					15 KVA, 3ø, 4W, XFMRS
3A								
3D	SSRV	N/A	*	2	2	H–O–A	PUSH–TO–TEST GREEN, RED	PFE–4A PUMP
4A	C/B		50					SPARE
4C								
4G								
4K								METER 1
4P			30					TVSS 2
4T			300					MAIN

SCHEDULE – PANEL "LA"

BUILDING: PFE–4A	LOCATION: MCC	PHASE: 3
TYPE:	FEED:	WIRE: 4
MANUFACTURER:	SC RATING: 10,000	VOLTAGE: 120/208
MODEL:	MAIN AMPS:	MOUNTING: INTERNAL TO MCC
CONFIGURATION:	PANEL AMPS: 100 MLO COPPER	

CKT NO	POLE	BKR TRIP	LOAD DESCRIPTION	@ LOAD (AMPS) A	B	C	CKT NO	POLE	BKR TRIP	LOAD DESCRIPTION	@ LOAD (AMPS) A	B	C
1	1	20	PLC POWER	10			2	1	–	SPACE ONLY			
3	1	20	PLC RECEPT		1.5		4	1	–				
5	1	20	PFE–4A VAULT RECEPT			1.5	6	1	–				
7	1	20	PFE–4A FLOW METER	.83			8	1	–				
9	1	20	MCC RECEPT		1.5		10	1	–				
11	1	20	SPARE				12	1	–				
13	1	20	SPARE				14	1	–				
15	1	–	SPACE ONLY				16	1	–				
17	1	–					18	1	–				
TOTAL CONNECTED LOAD PER PHASE, AMPS							TOTAL CONNECTED LOAD PER PHASE, AMPS						
TOTAL CONNECTED LOAD 3–PHASE, AMPS							TOTAL CONNECTED LOAD 3–PHASE, AMPS						

KEYED NOTES:

1. FURNISH STANDARD METER SLOT OPENING IN FRONT OF MCC'S PANEL COVER. PROVIDE CLEAR PLASTIC WEATHER PROOF COVER OVER OPENING. METER DEVICE AND ASSOCIATED CT'S AND PT'S TO BE FURNISHED AND INSTALLED BY OTHERS.
2. FURNISH MANUFACTURER'S STANDARD TVSS PROTECTION INTEGRAL WITH MCC.

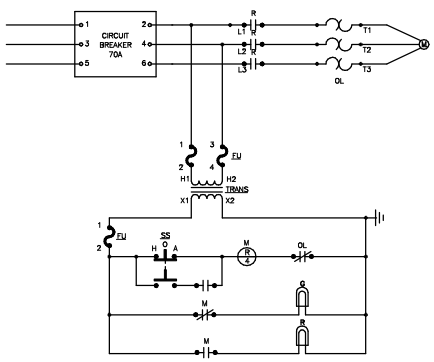

SPARE

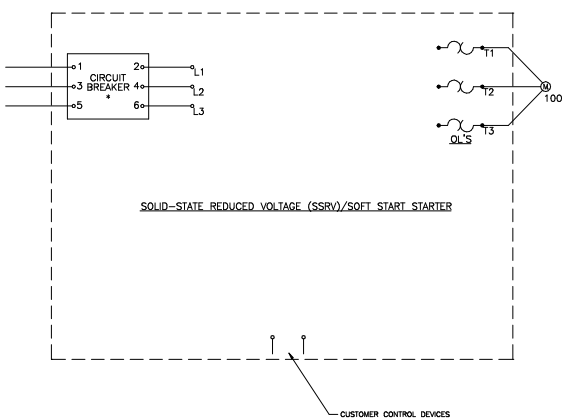

PFE–4A PUMP

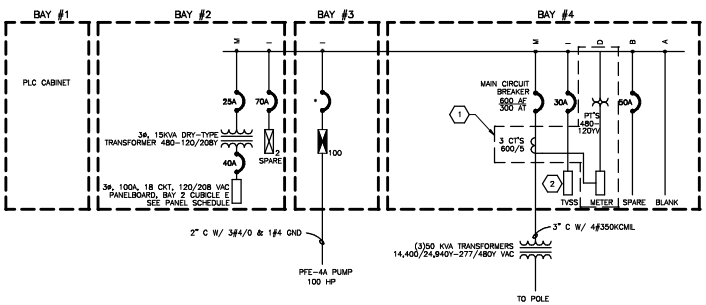

LEGEND:

MAGNETIC MOTOR STARTER. NUMBER DENOTES NEMA SIZE.

SOLID–STATE REDUCED VOLTAGE (SSRV)/SOFT START CONTROLLER. HORSEPOWER RATING NOTED.

MOTOR CONTROL CENTER ONE–LINE DIAGRAM

REQ'D PER ASSY	ITEM NO.	PART NO.	DESCRIPTION	MATERIAL	SPECIFICATION	SHT. NO.

DIMENSIONAL TOLERANCE UNLESS NOTED OTHERWISE .X± ANGLES ± .XX± FRACTIONS ± .XXX± DIMENSIONS ARE IN INCHES. SURFACE FINISH IN MICRO INCHES RMS UNLESS OTHERWISE NOTED. √ UNLESS NOTED OTHERWISE REMOVE ALL SHARP EDGES AND BURRS.

NEXT ASSY / RELATED DWG'S

DRAWN BY	M. TARIN	2–19–00
ENGINEER	A. HERNANDEZ	2–19–00
DESIGNED BY	A. HERNANDEZ	2–19–00
CHECKED BY		
APPROVAL		
APPROVAL		
AUTHORIZED		
RELEASE		

National Aeronautics and Space Administration
Lyndon B. Johnson Space Center
White Sands Test Facility

WSTF – PLUME–FRONT REMEDIATION
EXTRACTION WELL PFE–4A
ELECTRICAL
DETAILS

A.E. DWG. NO. | SCALE NONE | SHEET 1 OF 1

CODE IDENT. | SIZE F | DWG. NO. 656–E–02 | REV.

SYMBOL	LETTER	ZONE	DESCRIPTION	DATE	APPROVAL

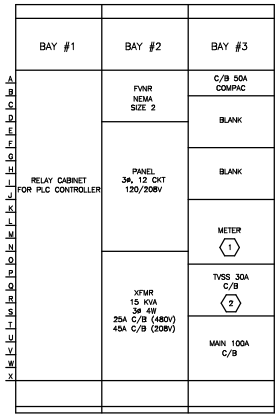

SCHEDULE – MOTOR CONTROL CENTER
480 VAC, 3ø, 4W, 42KA, NEMA 3R
600A INCOMING, 600A HORIZONTAL, 300A VERTICAL

SECTION/UNIT LOCATION	DESC	NEMA SIZE	CB TRIP (A)	AUX INTLKS NO	AUX INTLKS NC	SELECTOR SWITCHES	INDICATING LIGHTS	IDENTIFICATIONS
1								PLC PANEL
2A	FVNR	2	45	2	2	H-O-A	PUSH-TO-TEST GREEN, RED	PFE-5 PUMP
2E			45					100A, 3ø, 12 CKT, PNL
2N			25					15 KVA, 3ø, 4W, XFMRS
3A			50					SPARE
3D								METER (1)
3I			30					TVSS (2)
3M			100					MAIN

SCHEDULE – PANEL "LA"

BUILDING: PFE-5	LOCATION: MCC		PHASE: 3
TYPE:	FEED:		WIRE: 4
MANUFACTURER:	SC RATING: 10,000		VOLTAGE: 120/208
MODEL:	MAIN AMPS:		MOUNTING: INTERNAL TO MCC
CONFIGURATION:	PANEL AMPS: 100 MLO COPPER		

CKT NO	POLE	BKR TRIP	LOAD DESCRIPTION	ø LOAD (AMPS) A	B	C	CKT NO	POLE	BKR TRIP	LOAD DESCRIPTION	ø LOAD (AMPS) A	B	C
1	1	20	PLC POWER	10			2	1	–	SPACE ONLY			
3	1	20	PLC RECEPT		1.5		4	1	–				
5	1	20	PFE-5 VAULT RECEPT			1.5	6	1	–				
7	1	20	PFE-5 FLOW METER	.83			8	1	–				
9	1	20	MCC RECEPT		1.5		10	1	–				
11	1	20	SPARE				12	1	–				
TOTAL CONNECTED LOAD PER PHASE, AMPS							TOTAL CONNECTED LOAD PER PHASE, AMPS						
TOTAL CONNECTED LOAD 3-PHASE, AMPS							TOTAL CONNECTED LOAD 3-PHASE, AMPS						

KEYED NOTES:

(1) FURNISH STANDARD METER SLOT OPENING IN FRONT OF MCC'S PANEL COVER. PROVIDE CLEAR PLASTIC WEATHER PROOF COVER OVER OPENING. METER DEVICE AND ASSOCIATED CT'S AND PT'S TO BE FURNISHED AND INSTALLED BY OTHERS.

(2) FURNISH MANUFACTURER'S STANDARD TVSS PROTECTION INTEGRAL WITH MCC.

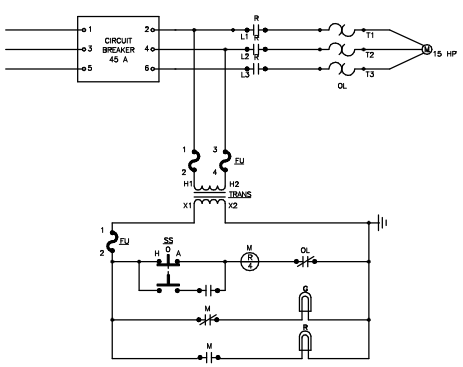

PFE-5 PUMP

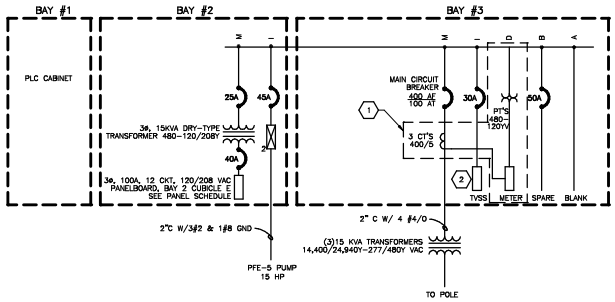

LEGEND:

MAGNETIC MOTOR STARTER. NUMBER DENOTES NEMA SIZE.

MOTOR CONTROL CENTER ONE-LINE DIAGRAM

REQ'D PER ASSY	ITEM NO.	PART NO.	DESCRIPTION	MATERIAL	SPECIFICATION	SHT. NO.

DIMENSIONAL TOLERANCE UNLESS NOTED OTHERWISE .X± ANGLES ± .XX± FRACTIONS ± .XXX± DIMENSIONS ARE IN INCHES. SURFACE FINISH IN MICRO INCHES RMS UNLESS OTHERWISE NOTED. UNLESS NOTED OTHERWISE REMOVE ALL SHARP EDGES AND BURRS.

NEXT ASSY / RELATED DWG'S

DRAWN BY	M. TARIN	2-19-00
ENGINEER	A. HERNANDEZ	2-19-00
DESIGNED BY	A. HERNANDEZ	2-19-00
CHECKED BY		
APPROVAL		
APPROVAL		
AUTHORIZED		
RELEASE		

National Aeronautics and Space Administration
Lyndon B. Johnson Space Center
White Sands Test Facility

WSTF – PLUME-FRONT REMEDIATION EXTRACTION WELL PFE-5 ELECTRICAL DETAILS

A.B. DWG. NO. | SCALE NONE | SHEET 1 OF 1

CODE IDENT. | SIZE F | DWG. NO. 657-E-02 | REV.

SYMBOL	LETTER	ZONE	DESCRIPTION	DATE	APPROVAL

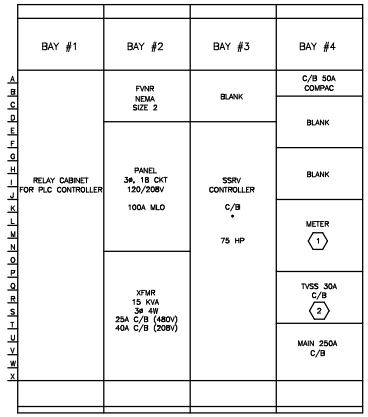

* TO BE SIZED BY MANUFACTURER TO PROVIDE PROPER SHORT CIRCUIT PROTECTION OF MOTOR IT IS TO PROTECT.

SCHEDULE – MOTOR CONTROL CENTER
480 VAC, 3ø, 4W, 42KA, NEMA 3R
600A INCOMING, 600A HORIZONTAL, 300A VERTICAL

SECTION/UNIT LOCATION	DESC	NEMA SIZE	CB TRIP (A)	AUX INTLKS NO	AUX INTLKS NC	SELECTOR SWITCHES	INDICATING LIGHTS	IDENTIFICATIONS
1								
2A	FVNR	2	70	2	2	H–O–A	PUSH–TO–TEST GREEN, RED	SPARE
2E			40					100A, 3ø, 18 CKT, PNL
2N			25					15 KVA, 3ø, 4W, XFMRS
3A								
3D	SSRV	N/A	*	2	2	H–O–A	PUSH–TO–TEST GREEN, RED	PFE–7 PUMP
4A	C/B		50					SPARE
4C								
4G								
4K								METER 1
4P			30					TVSS 2
4T			250					MAIN

SCHEDULE – PANEL "LA"

BUILDING: PFE–7	LOCATION: MCC	PHASE: 3
TYPE:	FEED:	WIRE: 4
MANUFACTURER:	SC RATING: 10,000	VOLTAGE: 120/208
MODEL:	MAIN AMPS:	MOUNTING: INTERNAL TO MCC
CONFIGURATION:	PANEL AMPS: 100 MLO COPPER	

CKT NO	POLE	BKR TRIP	LOAD DESCRIPTION	ø LOAD (AMPS) A	B	C	CKT NO	POLE	BKR TRIP	LOAD DESCRIPTION	ø LOAD (AMPS) A	B	C
1	1	20	PLC POWER	10			2	1	–	SPACE ONLY			
3	1	20	PLC RECEPT		1.5		4	1	–				
5	1	20	PFE–7 VAULT RECEPT			1.5	6	1	–				
7	1	20	PFE–7 FLOW METER	.83			8	1	–				
9	1	20	MCC RECEPT		1.5		10	1	–				
11	1	20	SPARE				12	1	–				
13	1	20	SPARE				14	1	–				
15	1	–	SPACE ONLY				16	1	–				
17	1	–					18	1	–				
TOTAL CONNECTED LOAD PER PHASE, AMPS							TOTAL CONNECTED LOAD PER PHASE, AMPS						
TOTAL CONNECTED LOAD 3–PHASE, AMPS							TOTAL CONNECTED LOAD 3–PHASE, AMPS						

KEYED NOTES:

1. FURNISH STANDARD METER SLOT OPENING IN FRONT OF MCC'S PANEL COVER. PROVIDE CLEAR PLASTIC WEATHER PROOF COVER OVER OPENING. METER DEVICE AND ASSOCIATED CT'S AND PT'S TO BE FURNISHED AND INSTALLED BY OTHERS.
2. FURNISH MANUFACTURER'S STANDARD TVSS PROTECTION INTEGRAL WITH MCC.

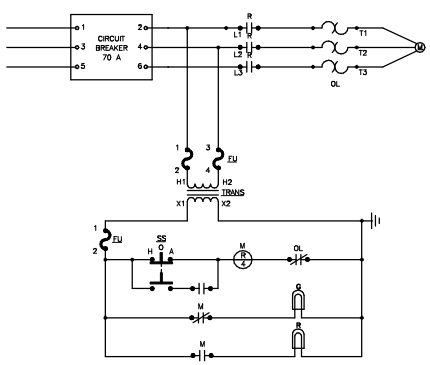

SPARE

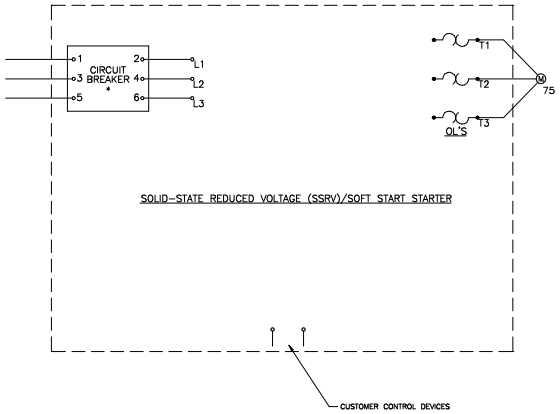

PFE–7 PUMP

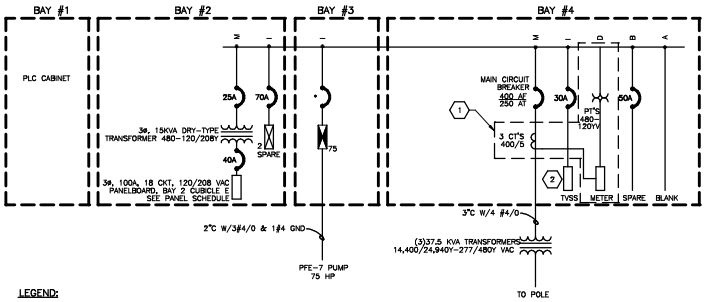

LEGEND:

MAGNETIC MOTOR STARTER. NUMBER DENOTES NEMA SIZE.

SOLID–STATE REDUCED VOLTAGE (SSRV)/SOFT START CONTROLLER. HORSEPOWER RATING NOTED.

MOTOR CONTROL CENTER ONE–LINE DIAGRAM

REQ'D PER ASSY	ITEM NO.	PART NO.	DESCRIPTION	MATERIAL	SPECIFICATION	SYE NO.

DIMENSIONAL TOLERANCE UNLESS NOTED OTHERWISE
.X± ANGLES ±
.XX± FRACTIONS ±
.XXX± DIMENSIONS ARE IN INCHES
SURFACE FINISH IN MICRO INCHES RMS UNLESS OTHERWISE NOTED. √
UNLESS NOTED OTHERWISE REMOVE ALL SHARP EDGES AND BURRS.

NEXT ASSY / RELATED DWG'S

DRAWN BY	M. TARIN	2–19–00
ENGINEER	A. HERNANDEZ	2–19–00
DESIGNED BY	A. HERNANDEZ	2–19–00
CHECKED BY		
APPROVAL		
APPROVAL		
AUTHORIZED		
RELEASE		

National Aeronautics and Space Administration
Lyndon B. Johnson Space Center
White Sands Test Facility

WSTF – PLUME–FRONT REMEDIATION EXTRACTION WELL PFE–7 ELECTRICAL DETAILS

A.E. DWG. NO. | SCALE NONE | SHEET 1 OF 1

CODE IDENT. | SIZE F | DWG. NO. 658–E–02 | REV.