NOTICE - WHEN GOVERNMENT DRAWINGS, SPECIFICATIONS, OR OTHER DATA ARE USED FOR ANY PURPOSE OTHER THAN IN CONNECTION WITH A DEFINITELY RELATED GOVERNMENT PROCUREMENT OPERATION, THE UNITED STATES GOVERNMENT THEREBY INCURS NO RESPONSIBILITY NOR ANY OBLIGATION WHATSOEVER; AND THE FACT THAT THE GOVERNMENT MAY HAVE FORMULATED, FURNISHED, OR IN ANY WAY SUPPLIED THE SAID DRAWINGS, SPECIFICATIONS, OR OTHER DATA IS NOT TO BE REGARDED BY IMPLICATION OR OTHERWISE AS IN ANY MANNER LICENSING THE HOLDER OR ANY OTHER PERSON OR CORPORATION, OR CONVEYING ANY RIGHTS OR PERMISSION TO MANUFACTURE, USE, OR SELL ANY PATENTED INVENTION THAT MAY IN ANY WAY BE RELATED THERETO.

APPLICATION

NEXT ASSY	USED ON

REVISION HISTORY

PART NO.	ZONE	REV	DESCRIPTION	DATE	APPROVAL
			BASIC	2009/08/17	
		A	COMPLETE UPDATE	2012/10/29	J. SHAVER

UNLESS OTHERWISE SPECIFIED DIMENSIONS ARE IN INCHES. INTERPRET DIMENSIONS AND TOLERANCES PER ASME Y14.5M-1994. TOLERANCES NO:

FRACTIONS DECIMALS ANGLES

THIRD ANGLE PROJECTION

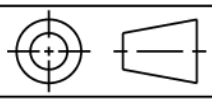

The information contained in the document is technical in content, but not technical data as defined by the International Traffic in Arms Regulations (ITAR) or the Export Administration Regulations (EAR), and therefore is EAR 99 NLR, no export license required, suitable for public release. [General Prohibition Six (Embargo) applies to all items subject to the EAR, i.e. items on the CCL and within EAR 99 NLR. You may not make an export or re-export contrary to the provision of part 746 (Embargos and Other Special Controls) of the EAR and 22 CFR part 126.1 of the ITAR].

EDDR #127780: NASA KSC Export Control Office (321-867-9209)

CAD MAINTAINED. CHANGES SHALL BE INCORPORATED ONLY BY THE DESIGN ACTIVITY

SOFTWARE: MS WORD

FILENAME: 120E3100003-A001.doc

MATERIAL:

HEAT TREATMENT:

FINAL PROTECTIVE FINISH:

ORIGINAL DATE OF DRAWING (YY/MM/DD):

DRAFTSMAN: A. DUFRESNE
CHECKER: C. MANUEL
ENGINEER: D. S. PARKER
CHECKER:
ENGINEER: A. DUFRESNE
STRESS: N/A
ENGINEER: C. REEVES
SUBMITTED: E. DENSON
APPROVED: J. SHAVER

JOHN F. KENNEDY SPACE CENTER, NASA
KENNEDY SPACE CENTER, FLORIDA

ELECTRICAL CABLE FABRICATION REQUIREMENTS

SIZE	CAGE CODE	DWG NO	REV
A	22264	**120E3100003**	A

SCALE	UNIT WEIGHT	SHEET	OF
None	—	1	15

REVISION HISTORY					
PART NO.	ZONE	REV	DESCRIPTION	DATE	APPROVAL

CONTENTS

1. SCOPE....4

2. GENERAL REQUIREMENTS....4

3. FABRICATION INSTRUCTIONS....5

4. STANDARD HEAVY-DUTY (OUTDOOR) CABLE SUBASSEMBLY DRAWING EXAMPLE....9

5. STANDARD LIGHT-DUTY (INDOOR) CABLE SUBASSEMBLY DRAWING EXAMPLE....10

6. SUBSTITIONS....11

7. TORQUE VALUE TABLES....13

8. REFERENCE DOCUMENTS FOR CABLE FABRICATION....15

FIGURES

Figure 1. 360º Overall Shield Termination Using a 120E0600001 Mold Adapter....6
Figure 2. Label Marking Detail....8
Figure 3. 360° Overall Shield Termination Using an AS85049/10 Environmental Backshell....8

TABLES

Table 1. Torque Values for Backshells....13
Table 2. Torque Values for Backshell Screws....14

EAR 99 – NO LICENSE REQUIRED

REVISION HISTORY					
PART NO.	ZONE	REV	DESCRIPTION	DATE	APPROVAL

ABBREVIATIONS, ACRONYMS, AND SYMBOLS

Elements, units of measure, and other terms commonly understood within the subject disciplines are abbreviated in this document without callouts. Those abbreviations and symbols are among the following.

"	inch
°	degree
°C	degree Celsius
cm	centimeter
EMI	electromagnetic interference
ESR	Engineering Support Request
ft	foot
GSE	ground support equipment
m	meter
MEK	methyl ethyl ketone
n	newton
PTFE	polytetrafluoroethylene
PVC	polyvinyl chloride
QD	quick disconnect
RFI	radio frequency interference
RTV	room-temperature vulcanizing (silicone)

EAR 99 – NO LICENSE REQUIRED

REVISION HISTORY					
PART NO.	ZONE	REV	DESCRIPTION	DATE	APPROVAL

1. SCOPE

Cable subassemblies shall be fabricated in accordance with this document and the requirements of KSC-E-165 and KSC-GP-864 regarding wire, cable, connectors, and backshells. Examples of drawings of heavy-duty outdoor and light-duty indoor cable subassemblies are provided in Sections 4 through 6. Tables are included in Section 7, and reference documents are listed in Section 8.

2. GENERAL REQUIREMENTS

a. Because each cable subassembly may require less than the standard number of packages for solder, epoxy, polyurethane marker tape, polyester tape, jumper wire, and small termination tubing, the contractor shall estimate the quantity to be bench-stocked for the total cable package. Where applicable, the blocks under BENCH STOCK MATERIALS on the cable subassembly drawing shall be marked “X” for all ends, “A” for end A, and “B” for end B. For cable subassemblies with more than two connectors, sequential letters shall be used, as applicable.

b. Applicable FABRICATION INSTRUCTIONS for cable subassemblies shall be designated by marked blocks with “X,” “A,” “B,” etc., as required.

c. Fabrication Instruction #1 is applicable to all cable subassemblies.

d. Torque values for backshells shall conform to Table 1.

e. Torque values for backshell screws shall conform to Table 2, where applicable.

f. When cables are potted and molded, 120E0600001 backshells shall be used for SAE AS50151 and MIL-DTL-38999 connectors.

g. When using environmental EMI/RFI backshells, refer to manufacturer’s instructions for installation.

h. Existing cables built to 79K19600 shall not be upgraded to requirements of this document.

i. Fabrication and test operations shall be performed according to the applicable requirements of KSC-E-165. In the event of contradiction, the cable subassembly drawing shall have precedence.

j. Unless otherwise specified on the cable subassembly wiring schematic, the contacts of connector A shall be wired to like contacts of connector B.

REVISION HISTORY					
PART NO.	ZONE	REV	DESCRIPTION	DATE	APPROVAL

k. Unused contact cavities shall be populated with sealing plugs or contacts as specified in NASA-STD-8739.4. In the event of contradiction, the cable subassembly drawing shall have precedence.

l. Fabrication tooling shall be certified and maintained in calibration according to the requirements of KSC-E-165.

3. FABRICATION INSTRUCTIONS

1. Review the fabrication instructions marked for completion in the upper left corner of the subassembly drawing. A dash number after the cable subassembly drawing number denotes the length of the cable in meters. “D” is used in lieu of a decimal point to prevent legibility errors. The bulk cable should be cut longer than the specified length by at least two-thirds of the tolerance to allow for possible retermination. The tolerance for cables up to 3 m is –0 cm, +8 cm. For cables from 3 m to 8 m, the tolerance is –0, +18 cm, and for cables over 8 m the tolerance is –0 cm, +36 cm (1 m = 3.28 ft; 1 cm = 0.394 inch).

2. Before assembly, inspect connectors according to 75M13302 and NASA-STD-8739.4. After assembly, qualify applicable connectors according to 75M13302 and NASA-STD-8739.4.

3. Keep protective covers or dust caps on connectors except during testing or potting and molding operations. Use of plastic caps is permitted when the parts list does not include specific metal caps.

4. For potting and molding operations, install mating connectors on all connectors that have resilient inserts.

5. Solder according to NASA-STD-8739.3 and KSC-STD-E-0010.

6. Pot terminated connectors that have exposed conductor-to-contact terminations (i.e., solder contacts). Also, pot the crimp contacts for added strain relief and added protection against gas migration. Extend the potting epoxy at least 0.125 inch over the exposed termination. Dam up the area to be potted with polytetrafluoroethylene (PTFE) tape, or use potting boots. If tape is used, remove it after curing. When solder contacts extend beyond the backshell, use PTFE tape or a sleeve to keep the epoxy approximately 0.125 inch from the gripping holes in the backshell. Potting procedures shall conform to the requirements of KSC-STD-132.

7. Mold the connections according to the applicable configuration of KSC-STD-132. Facilities for handling polyurethane shall meet the requirements of KSC-STD-132. Procedures for mixing, degassing, priming, and applying the compound shall meet the requirements of KSC-STD-132 and 79K14177.

8. When Instruction #8 is marked with an X, terminate the outer braided shield 360º using a 120E0600001 mold adapter as shown in Figure 1. The foil shield shall continue through to the back of the connector insert. If the Instruction #8 marking is other than X, terminate according to the corresponding dash number from drawing 79K04613.

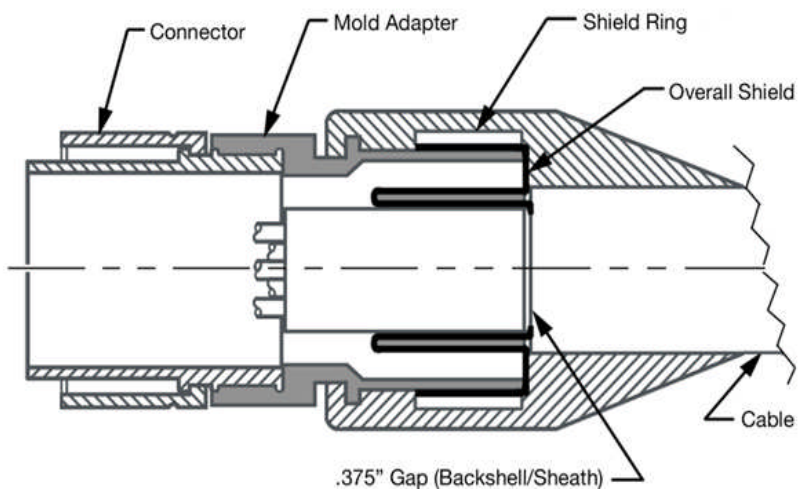

Figure 1. 360º Overall Shield Termination Using a 120E0600001 Mold Adapter

9. When the shield ring called out in the cable subassembly is too small to accommodate the diameter of the overall shield wrapped over the mold adapter or backshell, it is the option of the fabricator to use a different-sized shield ring whose inner diameter is no more than 0.2 inch larger than the diameter of the overall shield folded over the mold adapter or backshell. Note any substitution. Distribute the shield strands and drain wire evenly around the backshell or mold adapter, and place the shield rings correctly before crimping. Crimp with an approved hydraulic or hand crimping tools or magnetic metal former. Tighten the shield ring sufficiently to prevent movement by finger pressure or flexing cable.

10. Unless otherwise specified on the cable subassembly wiring schematic, terminate each individual shield drain wire to a contact (pin or socket) and isolate each from all other shield drain wires and from all other conductive material, using bench stock shrinkable vinyl tubing. Up to four shields may be ganged together. Refer to NASA-STD-8739.4, Section 11.6, Figure 11-4 and Table 11-1. When a shield drain wire is provided, a wire tap is not required.

REVISION HISTORY					
PART NO.	ZONE	REV	DESCRIPTION	DATE	APPROVAL

Cap unused wires with heat-shrinkable tubing and cut at least 0.125 inch from the outside mold surface and at least 0.5 inch from the shield ring.

11. Terminate barrier tape over the shield and under the inner ring. Apply polyester tape to keep the barrier tape from unwrapping and to provide a snug fit under the shield ring.

12. Clean the surface of the cable sheath with sandpaper and wipe with methyl ethyl ketone (MEK) where the boot will cover. Place a heat-shrinkable boots over the cable sheath prior to connector termination. Position the boot over the backshell groove and, with a heat gun registering 150 °C to 160 °C, direct heat evenly to only the front of the boot and around the periphery until the front of the boot shrinks firmly into the groove, melting all the hot-melt cement coating inside the boot. Slowly apply heat back and forth along the boot until it fully shrinks to the cable jacket, making sure that all the hot-melt cement has flowed to a uniform thickness. If necessary, apply hot-melt tape around the cable near the rear end of the boot to provide additional sealant.

13. Obtain marker tape that meets the requirements of 75M11300-1 or -2. -1 marker tape is green for launch-essential cables and -2 is red for test cables. Cut a length of tape 10 times the diameter of the cable and mark the entire length of the tape, leaving two line spaces between each repetition. Position the subassembly label approximately 12 inches from each connector and include the information shown in Figure 2.

    May use Brady label HSNX-800-2-xx for harnesses where space is limited.

    Mark tape according to KSC-STD-E-0015. When a typewriter or computer printer is used for marking the tape, follow the intent of KSC-STD-E-0015. If necessary, apply a temporary label at one end of the cable to identify the type of cable subassembly before the cable is put into use.

    Wrap marker tape concentrically around the cable. If the cable is less than 0.25 inch in diameter, use heat-shrinkable tubing meeting the requirements of AMS-DTL-23053/5 to increase the diameter to at least 0.25 inch where tape will be applied. If necessary, use glass fiber tape meeting the requirements of MIL-I-19166 as filler under the tubing.

    For harnesses using single shielded pair cables, the cable code shall contain the code for the single pair cable in brackets followed by a multiplier in parenthesis for the number of pairs in the harness.

    Ex. [2(1PT#16)OS] (X3). This represents a harness consisting of 3 single pair cables.
    Ex. 3PTSI This represents a harness consisting of 3 single pairs, twisted, shielded and insulated cables.

    See Figure 2 for marking details.

REVISION HISTORY					
PART NO.	ZONE	REV	DESCRIPTION	DATE	APPROVAL

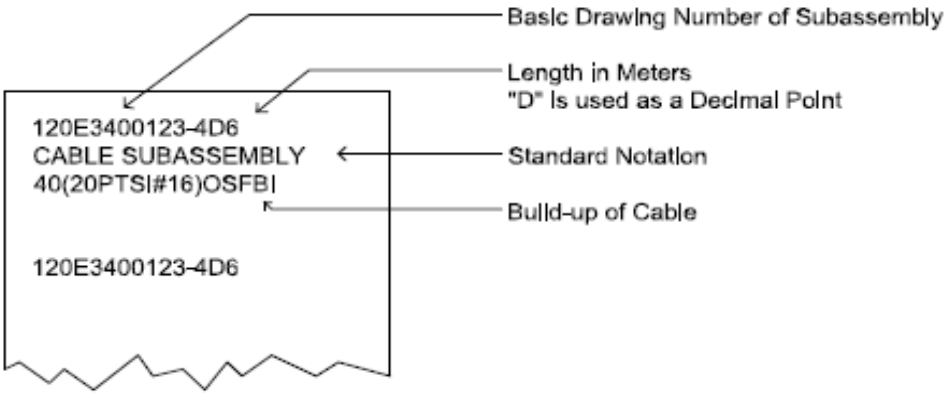

Figure 2. Label Marking Detail

14. When splicing conductors or shields, follow the detail instruction of 82K03874.

15. Terminate SAE AS50151 and MIL-DTL-38999 crimp contact connectors according to 82K04459.

16. Terminate the outer shield 360º using an environmental backshell as shown in Figure 3. The foil shield shall continue through to the back of the connector insert.

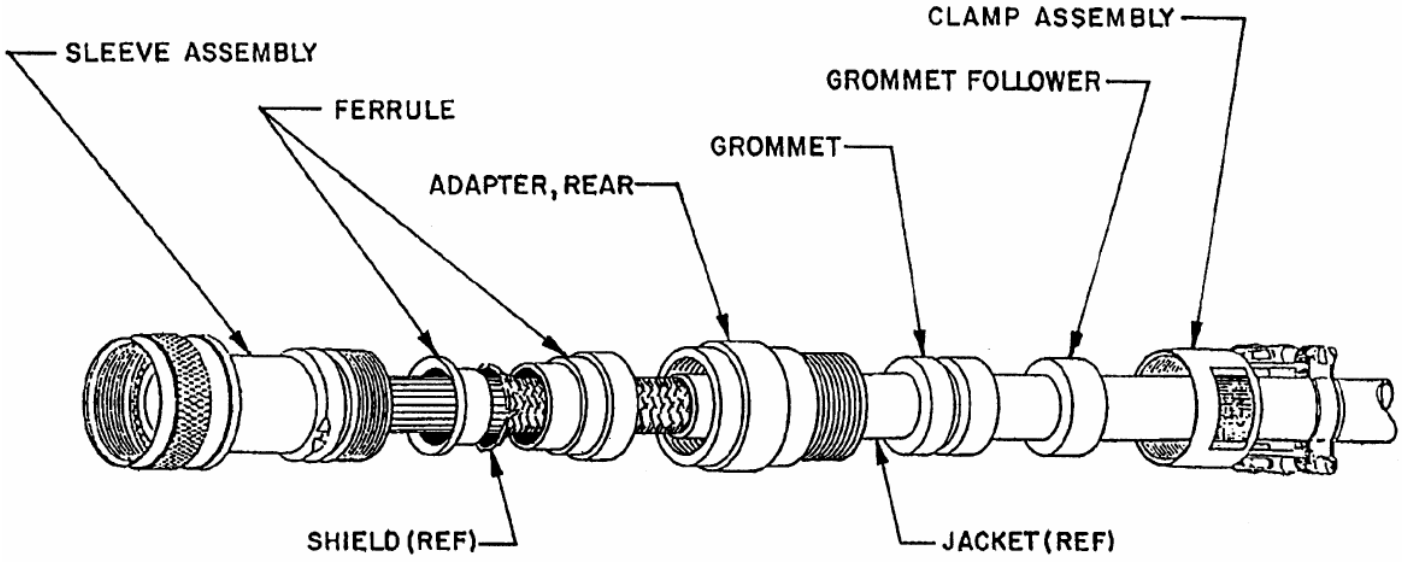

Figure 3. 360° Overall Shield Termination Using an AS85049/10 Environmental Backshell

EAR 99 – NO LICENSE REQUIRED

REVISION HISTORY					
PART NO.	ZONE	REV	DESCRIPTION	DATE	APPROVAL

4. STANDARD HEAVY-DUTY (OUTDOOR) CABLE SUBASSEMBLY DRAWING EXAMPLE

All part numbers shown in this example are for illustration only. Fabrication of cable subassembly shall use part callouts from that drawing.

SENSITIVE BUT UNCLASSIFIED, ITAR CATEGORY IV(I)

CONTINUATION SHEET

FABRICATE PER THIS DRAWING AND THE FOLLOWING INSTRUCTIONS OF 120E3100003

1	X	5		9	X	13	X-1
2	X	6	X	10		14	
3	X	7	X	11		15	X
4	X	8	X	12		16	

AUTHORIZED SUBSTITUTIONS: _____

BENCH STOCK MATERIALS
(See general requirements of 120E3100003)

- ____ SOLDER SEE IPC J-STD-001
- ____ WIRE, 8, 19 STRAND, MIL-DTL-16878/1
- ____ TAPE, POLYESTER, TYPE 1, L-T-1008, 1 IN.
- X EPOXY (SEE INSTRUCTION 6)
- X POLYURETHANE (SEE INSTRUCTION 7)
- X MARKER TAPE (SEE INSTRUCTION 13)
- ____ TUBING, VINYL, AMS-DTL-23053/5

1 INSERT SEALING PLUG INTO UNUSED CONTACT.

2 OR ENGINEERING EQUIVALENT.

3 USE THIS PART NUMBER TO ORDER SPARE CONTACT PINS/SOCKETS IF REQUIRED.

REVISIONS			
SYM	DESCRIPTION	DATE	APPROVAL

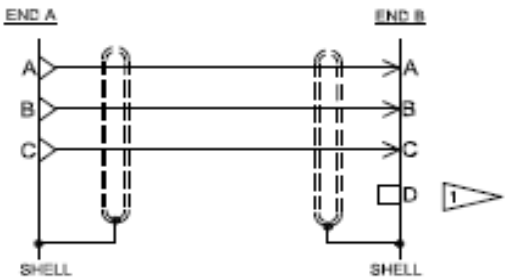

WIRING SCHEMATIC

FIND NO.	DESCRIPTION	PART NUMBER	MFR. CODE	NO. REQ D	STOCK SIZE	MATL. SPEC	SPL NOTES
12	CAP, METAL	662-323NF13N	06324	1 B	#13		2
11	CAP, METAL	662-304NF10N	06324	1 A	#10		2
10	CONTACT, PIN	M39029/58-364		3	#16	SAE AS39029	
9	CONTACT, SOCKET	M39029/30-215		3	#16	SAE AS39029	
8	SEALING PLUG	MS27488-16-2		1 B	#16	MS37488	CONTACT D
7	SHIELD RING	MS3049/26-2-14		1 B	3.710	SAE AS85049	T&B GSB 710
6	SHIELD RING	MS3049/26-2-10		1 A	3.590	SAE AS85049	T&B GSB 590
5	MOLD ADAPTER	120E0600001-9		1 B	#13	120E0600001	
4	MOLD ADAPTER	120E0600001-41		1 A	#10	120E0600001	
3	CONNECTOR	D38999/26SC4PN		1 B	#13	MIL-DTL-38999	4 #16 PINS
2	CONNECTOR	MS3456W10SL-3S		1 A	#10	SAE AS50151	3 #16 SOCKETS
1	CABLE	120E3100001-003		1	3(3#16) OSF8	120E3100001	

LIST OF MATERIALS

SIZE	CAGE CODE	DWG NO	REV
A	22264	120E3400047	A
SCALE NONE		UNIT WEIGHT	SHEET 2 OF 2

REV A; SHEET 2; DWG NO 120E3400047

KSC FORM 21-2F NS (REV09/07) PREVIOUS EDITIONS ARE OBSOLETE

SENSITIVE BUT UNCLASSIFIED, ITAR CATEGORY IV(I)

EAR 99 – NO LICENSE REQUIRED

SIZE	CAGE CODE	DWG NO	REV
A	22264	120E3100003	A
SCALE None		UNIT WEIGHT —	SHEET 9 OF 15

REVISION HISTORY					
PART NO.	ZONE	REV	DESCRIPTION	DATE	APPROVAL

5. STANDARD LIGHT-DUTY (INDOOR) CABLE SUBASSEMBLY DRAWING EXAMPLE

All part numbers shown in this example are for illustration only. Fabrication of cable subassembly shall use part callouts from that drawing.

SENSITIVE BUT UNCLASSIFIED, ITAR CATEGORY IV(I)

CONTINUATION SHEET

FABRICATE PER THIS DRAWING AND THE FOLLOWING INSTRUCTIONS OF 120E3100003

1 X	5	9	13 X-1
2 X	6	10	14
3 X	7	11	15 X
4	8	12	16 X

AUTHORIZED SUBSTITUTIONS: _____

BENCH STOCK MATERIALS
(See general requirements of 120E3100003)

- ____ SOLDER SEE IPC J-STD-001
- ____ WIRE, 8, 19 STRAND, MIL-DTL-16878/1
- ____ TAPE, POLYESTER, TYPE 1, L-T-1028, 1 IN,
- ____ EPOXY (SEE INSTRUCTION 6)
- ____ POLYURETHANE (SEE INSTRUCTION 7)
- X MARKER TAPE (SEE INSTRUCTION 13)
- ____ TUBING, VINYL, AMS-DTL-23053/5

1 OR ENGINEERING APPROVED EQUIVALENT.

2 USE THIS PART NUMBER TO ORDER SPARE CONTACT PINS/SOCKETS IF REQUIRED.

REVISIONS			
SYM	DESCRIPTION	DATE	APPROVAL

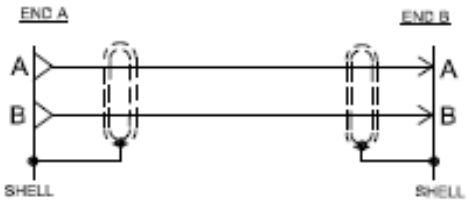

WIRING SCHEMATIC

FIND NO.	DESCRIPTION	PART NUMBER	MFR. CODE	NO. REQ D	STOCK SIZE	MATL. SPEC	SPL NOTES
9	CAP, METAL	660-023NF11N	06324	1 B	#11		1
8	CAP, METAL	660-004NF10N	06324	1 A	#10		1
7	CONTACT, PIN	M39029/58-364		2	#16	SAE AS39029	
6	CONTACT, SOCKET	M39029/30-215		2	#16	SAE AS39029	
5	BACKSHELL	M85049/1911W02		1 B	#11	SAE AS85049	
4	BACKSHELL	M85049/10-11W		1 A	#10	SAE AS85049	
3	CONNECTOR	D38999/26WB2PN		1 B	#11	MIL-DTL-38999	2 #16 PINS
2	CONNECTOR	MS3456W10SL-4S		1 A	#10	SAE AS50151	2 #16 SOCKETS
1	CABLE	120E3100002-002		1	2(2#16) OSFB	120E3100002	

LIST OF MATERIALS

SIZE	CAGE CODE	DWG NO	REV
A	22264	120E3400129	-
SCALE NONE		SHEET 2 OF 2	

120E3400129 REV - SHEET 2

KSC FORM 21-2F NS (REV09/07) PREVIOUS EDITIONS ARE OBSOLETE

SENSITIVE BUT UNCLASSIFIED, ITAR CATEGORY IV(I)

REVISION HISTORY					
PART NO.	ZONE	REV	DESCRIPTION	DATE	APPROVAL

6. SUBSTITIONS

Because of the unavailability of many connectors and cables, substitutions are sometimes necessary. The substitutions listed below do not degrade the functional qualities of the cable subassembly.

The reasons for the preferred types are standardization and ease of termination. The connector shell size, style, insert arrangement, and gender shall be the same for all recommended substitutions.

The following substitutions may be made without a drawing change, Engineering Support Request (ESR), waiver deviation, or contract change, unless otherwise noted.

S1 Substitute wall-mount or jam nut receptacles for inline receptacles.

S2 Substitute wall-mount for jam nut receptacles (or vice versa) when authorized by ESR only. Mounting holes shall be changed as required.

S3 SAE AS50151 solder service class R may be substituted with service class E or F, or by crimp, rear-release service class W, LS, KT, or KS.

NOTE: Connector accessory threads of MS345x connectors are one size larger than the MS310x series; therefore, backshells shall be changed in size.

S4 80K56934 backshell may be substituted with appropriate M85049/26-1-x backshell.

S5 MSFC 40M39569 (NB) connectors are flight-qualified versions of MIL-DTL-26482, Series 2. For GSE checkout cables, MIL-DTL-26482 may be substituted, but flight-essential, GSE-vehicle-interfacing connectors shall be the NB types. Substitution shall, therefore, be authorized by ESR or contract change.

S6 MSFC 40M38277 (NLS) connectors are flight-qualified versions of MIL-DTL-38999, Series II. There are no flight-essential interfaces with ground cables. Therefore, MIL-DTL-38999, Series II, may be substituted for NLS connectors.

S7 MSFC 40M38298 (NBS) connectors have no substitutes.

Where either 120E3100001 or 120E3100002 bulk cable is called out, various substitutions are acceptable without drawing change or ESR. (Contract deviation may be required.) The following cable substitution authority applies.

S8 Overall shields for shop-fabricated cables shall be tubular (not flat) and braided with 95% coverage, tinned copper according to A-A-59569. Diameter selection shall limit expansion, which would reduce the 95% coverage, and the shields shall be tight-fitting over the conductor.

REVISION HISTORY					
PART NO.	ZONE	REV	DESCRIPTION	DATE	APPROVAL

S9 Cable jacket on shop-fabricated cables shall be M23053/5 or /15 black according to SAE AMS-DTL-23053 and selected to shrink for a tight fit.

S10 Where heat-shrinkable boots are called out in the drawing, molding with polyurethane is authorized without ESR or contract change. Where molding with polyurethane is called out in the drawing, the use of heat-shrinkable boots may be authorized only by ESR or contract change. If heat-shrinkable boots are used on outdoor cables, the void within the boots shall be filled with a nonacetic acid, silicone, two-part RTV compound.

S11 AS85049/26-2 shield rings may be substituted with 75M13676, T&B GSB and GSC, or with shop rings fabricated according to 75M13676 (Table 5). Sizes shall comply with Fabrication Instruction 9 of this drawing.

S12 MSFC 40M38277 (NLS-S) straight strain relief backshells are flight-qualified versions of AS85049/49 backshells. When an NLS connector is substituted with a MIL-DTL-38999 connector, an appropriate-size AS85049/49 backshell may be used.

S13 MIL-DTL-26482, Series 1 (MS312xF), may be substituted with Series 2 crimp (MS347xW) with the addition of an AS85049/52 strain relief backshell. MS312xF connectors have the strain relief clamp built into the back of the connector. (Backshell is clamp-type nonenvironmental.)

S14 SAE AS50151, solder service class F, connectors may be substituted by SAE AS50151 crimp rear-release connectors with the addition of an AS85049/52 strain relief backshell.

NOTE: MS3108F connectors shall use an AS85049/51 strain relief backshell instead of an AS85049/52 strain relief backshell.

S15 CVA series connectors (M83723/CVA) are similar to SAE AS50151, Series III, connectors and can be replaced by the appropriate 3450 Series AS50151 connector.

NOTE: Mod code 16 connectors are flight-qualified connectors and can be replaced with nonflight connectors only with approval of the design engineer.

S16 The following potting backshells are interchangeable for SAE AS50151 series connectors. Substitute with like thread size.

75M13303-x 79K33827-x

REVISION HISTORY					
PART NO.	ZONE	REV	DESCRIPTION	DATE	APPROVAL

7. TORQUE VALUE TABLES

Table 1. Torque Values for Backshells

Shell Size	MIL-DTL-38999 & 40M38277			Group 1 Light & Medium Duty SAE AS50151 (MS3100 Series) MIL-DTL-26482 (Series 1) 40M38298 (±5 inch-pounds)	Group 2 Heavy Duty SAE AS50151 (MS3400 Series) MIL-DTL-26482 (Series 2) MIL-C-22992 40M39569 (±5 inch-pounds)	
	Series I	Series II & 40M38277	Series III & IV (n-m)		Shop-Fabricated	Handheld-Tool Applications (Field Repair)
8 S	-	-	-	40	56	40-50
8	-	50 ± 5	-	40	56	40-50
9	100 ± 10	-	(11.3 ± 1.1)	40	56	40-50
10 S	-	-	-	40	76	40-50
10	-	50 ± 5	-	40	76	40-50
10 SL	-	-	-	40	76	40-50
11	100 ± 10	-	(11.3 ± 1.1)	40	76	40-50
12 S	-	-	-	40	108	40-50
12	-	50 ± 5	-	40	108	40-50
13	150 ± 15	-	(17.0 ± 1.5)	40	108	40-50
14 S	-	-	-	40	116	50-60
14	-	50 ± 5	-	40	116	50-60
15	150 ± 15	-	(17.0 ± 1.5)	40	116	50-60
16 S	-	-	-	40	116	50-60
16	-	50 ± 5	-	40	116	50-60
17	200 ± 20	-	(22.6 ± 2.3)	40	116	50-60
18	-	50 ± 5	-	40	116	50-60
19	200 ± 20	-	(22.6 ± 2.3)	40	116	50-60
20	-	100 ± 10	-	80	136	80-90
21	250 ± 25	-	(28.3 ± 2.8)	80	136	80-90
22	-	100 ± 10	-	80	136	80-90
23	250 ± 25	-	(28.3 ± 2.8)	80	136	80-90
24	-	100 ± 10	-	80	136	80-90
25	250 ± 25	-	(28.3 ± 2.8)	80	136	80-90
28	-	-	-	120	148	120-130
32	-	-	-	120	148	120-130
36	-	-	-	120	148	120-130
40	-	-	-	120	164	150-170
44	-	-	-	120	164	150-170
48	-	-	-	120	164	150-170

EAR 99 – NO LICENSE REQUIRED

REVISION HISTORY					
PART NO.	ZONE	REV	DESCRIPTION	DATE	APPROVAL

Table 2. Torque Values for Backshell Screws

Torque Values for Cable Clamp Screws (CRES only) Use 75-80% of value for installation into aluminum or composite materials	
Screw Size	Recommended Max Torque (inch-pounds)
2-56	2.5
4-40	5.2
6-32	10.0
8-32	20.0
10-32	24.0
0.250-20	40.0

EAR 99 – NO LICENSE REQUIRED

REVISION HISTORY					
PART NO.	ZONE	REV	DESCRIPTION	DATE	APPROVAL

8. REFERENCE DOCUMENTS FOR CABLE FABRICATION

The following are referenced for cable fabrication. Each is listed with an abbreviated description.

NASA

NASA-STD-8739.4*	crimping, interconnecting cables, harnesses, and wiring
NASA-STD-8739.3*	soldered electrical connections

Kennedy Space Center

KSC-E-165*	electrical GSE fabrication	79K14177*	molding procedure
KSC-GP-864*	cable handbook	79K19600	legacy cable fabrication spec
KSC-SPEC-E-0029**	potting compound	79K24801††	22992 molding adapter
KSC-STD-132*	potting and molding	79K32818-x	adapter connector molding
KSC-STD-E-0015*	GSE marking	79K33827	molding adapter
75M11300**	marker tape	80K56934	adapter connector molding
75M13302*	connector inspection	82K03874*	misc. assembly details
75M13303-x	molding adapter	82K04459*	termination details
75M13676	shield rings	120E0600001**	current molding adapter
75M13703-x	pot/mold adapt, min. connectors	120E3100001**	outdoor/rugged cables
79K04613*	shield terminations	120E3100002**	indoor/light-duty cables

Military/Industry

AMS-DTL-23053	insulation sleeving	MIL-DTL-83723	CVA series connectors
ASTM D740†	MEK	MIL-I-19166	electrical insulation tape
ASTM D4080†	trichloroethylene	MS17349††	protective caps, recpt
DLA-A-A-59569	wire braid	MS17350††	protective caps, plug
IPC J-STD-001†	solder	MS25042††	dust caps, plug
IPC J-STD-004†	solder fluxes	MS25043††	dust caps, plug
IPC J-STD-005†	solder paste	SAE AS20659††	crimp lugs, uninsulated
L-T-100†	polyester adhesive tape	SAE AS25036††	crimp lugs, insulated
M85049/26**	shield rings	SAE AS25274††	crimp end caps
MIL-C-22992	heavy-duty connectors	SAE AS31091††	shrink boots
MIL-DTL-16878	insulated wire	SAE A50151	AN-type connectors
MIL-DTL-26482	miniature QD connectors	SAE AS50861	PVC insulated wire
MIL-DTL-38999	high-density connectors	SAE AS85049	connector accessories

Marshall Space Flight Center

40M38277	NLS-miniature connectors	MSFC-QPL-515††	polyurethane
40M38298	NBS-miniature connectors	MSFC-SPEC-222††	epoxy
40M39569	NB-miniature connectors		

* Document is required for fabrication.
** Document may be required for procurement of specific items. (All other documents are references and are not generally required for procurement)
† Material is required for fabrication, is listed on fabrication documents, and is not listed in this document.
†† Parts are required for fabrication, are listed on fabrication documents, and are not in this document.