REVISIONS				
ZONE	SYM	DESCRIPTION	DATE	APPROVAL
	-	-	-	

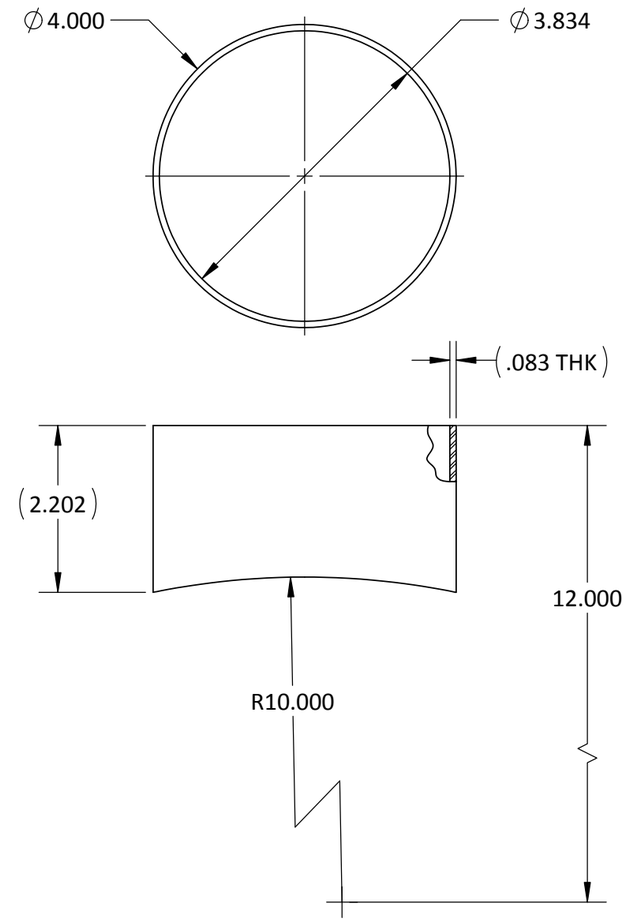

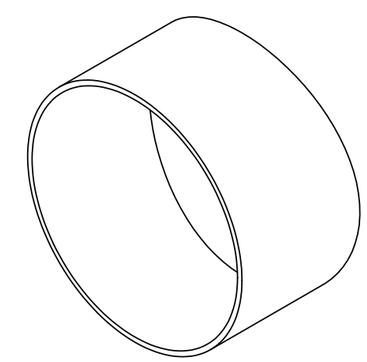

ISOMETRIC VIEW

NOTES:

1. MATERIAL: SS 304
2. REMOVE BURRS AND BREAK EDGES
3. FINISH PART 32 ALL OVER

SEE ENGINEERING RECORDS		TOLERANCE EXCEPT AS NOTED DIMENSIONS ARE IN INCHES DECIMAL .XX = ±0.020 .XXX = ±0.005 ANGLE .X = ±1°	ORIGINAL DATE OF DRAWING 8/5/12
		MATERIAL 1	DRAFTSMAN / STRESS
		HEAT TREAT	ENGINEER BCW / MNFG
NEXT ASSY	USED ON	FINAL FINISH 3	MATERIALS / QA
APPLICATION			CHECKER
			SUBMITTED
			APPROVED

CENTER CHAMBER VIEW PORT TUBE

EST WT 0.62 LBS | SCALE 1:2 | CODE 339B2

GEORGE C. MARSHALL SPACE FLIGHT CENTER
NATIONAL AERONAUTICS AND SPACE ADMINISTATION
Marshall Space Flight Center, AL 35812

DWG SIZE B | 120801511

SHEET 1 OF 1